Easergy MiCOM P633

Transformer Differential Protection Device

P633/EN M/R-b5-A

Version P633 -312 -419/420/421 -661

Technical Manual

Volume 1 of 2

Schneider Electric

IMPORTANT INFORMATION

NOTICE: Read these instructions carefully, and look at the equipment to become familiar with the device before trying to install, operate, or maintain it. The following special messages may appear throughout this documentation or on the equipment to warn of potential hazards or to call attention to information that clarifies or simplifies a procedure.

The addition of this symbol to a Danger or Warning safety label indicates that an electrical hazard exists, which will result in death or serious injury if the instructions are not followed.

This is the safety alert symbol. It is used to alert you to a potential personal injury hazard. Obey all safety messages that follow this symbol to avoid possible injury or death.

DANGER

DANGER indicates an imminently hazardous situation which, if not avoided, **will result** in death or serious injury.

WARNING

WARNING indicates a potentially hazardous situation which, if not avoided, **can result** in death or serious injury.

CAUTION

CAUTION indicates a potentially hazardous situation which, if not avoided, **can result** in minor or moderate injury with or without equipment damage.

NOTICE

NOTICE, used without safety alert symbol, indicates a potentially hazardous situation which, if not avoided, **can result** in equipment damage.

When electrical equipment is in operation, dangerous voltage will be present in certain parts of the equipment.

DANGER

HAZARD OF ELECTRIC SHOCK, EXPLOSION, OR ARC FLASH

- Only qualified personnel, trained, authorized and familiar with the device and all the safety instructions in the general Safety Guide (SFTY/5LM/L11 or later version) and appropriate Chapter 5, Chapter 10, Chapter 11, Chapter 12 and Chapter 13 of this manual, shall work on installation, connection, commissioning, maintenance or servicing of this device.

Failure to follow these instructions will result in death or serious injury.

DANGER

HAZARD OF ELECTRIC SHOCK, EXPLOSION, OR ARC FLASH

- Switch off the auxiliary power supply before any work in the terminal strip area.
- Switch off all the power supplies in connection to the equipment before any work in the terminal strip area to isolate the device.
- Do not touch the terminal strip area when equipment is in operation.
- Do not remove or add wires in the terminal strip area when equipment is in operation.
- Short-circuit the system current transformers before disconnecting wires to the transformer board (valid only for pin terminals, not required for ring terminals which have a shortening block).
- A protective conductor (ground/earth) of at least 1.5 mm^2 must be connected to the protective conductor terminal on the power supply board and on the main relay case.
- Do never remove the protective conductor connection to the device casing as long as other wires are connected to it.
- Where stranded conductors are used, insulated crimped wire end ferrules must be employed.

Failure to follow these instructions will result in death or serious injury.

Note: Regarding the appropriate wiring connections of the equipment refer to the document Px3x_Grounding_Application_Guide_EN_h.pdf.

The signals MAIN: Blocked/faulty and SFMON: Warning (LED) are permanently assigned to the LEDs labeled OUT OF SERVICE and ALARM and can be assigned to output relays to indicate the health of the device.

It is recommended that the signals MAIN: Blocked/faulty and SFMON: Warning (LED) are communicated to the substation automation system for alarm purposes, using hardwiring via output relays or the communication interface.

⚠ WARNING

HAZARD OF UNSAFE OPERATION

- Only qualified personnel, trained, authorized and familiar with the device and all the safety instructions in the general Safety Guide (SFTY/5LM/L11 or later version) and appropriate Chapter 5, Chapter 10, Chapter 11, Chapter 12 and Chapter 13 of this manual, shall work on installation, connection, commissioning, maintenance or servicing of this device.
- Proper and safe operation of this device depends on appropriate shipping and handling, proper storage, installation and commissioning, and on careful operation, maintenance and servicing. For this reason only qualified personnel shall work on or operate this device.
- Any modifications to this device must be in accordance with the manual. If any other modification is made without the express permission of Schneider Electric, it will invalidate the warranty, and may render the product unsafe.

Failure to follow these instructions can result in unintended equipment operation.

⚠ DANGER

HAZARD OF ELECTRIC SHOCK, EXPLOSION, OR ARC FLASH

In case of usage of the equipment with DHMI*:

- A protective conductor (ground/earth) of at least 1.5 mm^2 (US: AWG14 or thicker) must be connected to the DHMI protective conductor terminal to link the DHMI and the main relay case; these must be located within the same substation.
- The DHMI communication cable must not be in contact with hazardous live parts.
- The DHMI communication cable must not be routed or placed alongside high-voltage cables or connections. Currents can be induced in the cable which may result in electromagnetic interference.
- We recommend to use only cables of category CAT6 (or better), which has been tested up to a length of 10 m.

Failure to follow these instructions will result in death or serious injury.

* DHMI = Detachable Human Machine Interface

Changes after going to press

Table of Contents

1 Application and Scope 1-1
1.1 Overview - P633 1-1
1.1.1 Design 1-3
1.2 Including Function Groups in the Configuration 1-4
1.3 Overview of Function Groups - Part 1 1-5
1.4 Overview of Function Groups - Part 2 1-7
1.5 Control Functions 1-9
1.6 Configurable Function Keys 1-10
1.7 Inputs and Outputs 1-11
1.8 Control and Display 1-12
1.9 Information Interfaces 1-13

2 Technical Data 2-1
2.1 Conformity 2-1
2.2 General Data 2-2
2.2.1 General Device Data 2-2
2.3 Tests 2-4
2.3.1 Type Tests 2-4
2.4 Environmental Conditions 2-8
2.5 Inputs and Outputs 2-9
2.5.1 Measuring Inputs 2-9
2.5.2 Binary Signal Inputs 2-10
2.5.3 IRIG-B Interface 2-11
2.5.4 Direct Current Input 2-11
2.5.5 Resistance Thermometer 2-11
2.5.6 Direct Current Output 2-11
2.5.7 Output Relays 2-12
2.5.8 BCD Measured Data Output 2-12
2.6 Interfaces 2-13
2.6.1 Local Control Panel 2-13
2.6.2 PC Interface 2-13
2.6.3 Serial Communication Interface 2-13
2.6.4 Ethernet Communication Interface 2-14
2.6.5 IRIG-B Interface 2-14
2.7 Information Output 2-15
2.8 Settings – Typical Characteristic Data 2-16
2.8.1 Main Function 2-16
2.8.2 Differential Protection 2-16
2.8.3 Definite-Time and Inverse-Time Overcurrent Protection 2-16
2.8.4 Time-Voltage Protection 2-16
2.8.5 Overfluxing Protection 2-16
2.9 Deviations 2-17
2.9.1 Deviations of the Operate Values 2-17
2.9.2 Deviations of the Timer Stages 2-19
2.9.3 Deviations of Measured Data Acquisition 2-19
2.10 Resolution of the Fault Data Acquisition 2-20
2.10.1 Time Resolution 2-20
2.10.2 Currents 2-20
2.10.3 Voltage 2-20

2.11 Recording Functions 2-21
2.11.1 Organization of the Recording Memories 2-21
2.12 Power Supply 2-23
2.13 Current Transformer Specifications 2-24
2.13.1 Symbols 2-24
2.13.2 General Equations 2-25
2.13.3 Transformer Differential Protection 2-26

3 Operation 3-1
3.1 Modular Structure 3-1
3.2 Operator-Machine Communication 3-3
3.3 Cyber Security (Function Group CS) 3-4
3.3.1 Users, Roles and Rights for Easergy MiCOM P30 3-4
3.3.2 Cyber Security Implementation 3-5
3.4 Configuration of the Local Control Panel (Function Group LOC) 3-7
3.4.1 Bay Panel 3-7
3.4.2 Operation Panel 3-9
3.4.3 Fault Panel 3-10
3.4.4 Overload Panel 3-11
3.4.5 Selection of the Control Point 3-12
3.4.6 Configurable Clear Key 3-12
3.5 Communication Interfaces 3-13
3.5.1 PC Interface (Function Group PC) 3-14
3.5.2 Communication Interface 1 (Function Group COMM1) 3-15
3.5.3 Communication Interface 2 (Function Group COMM2) 3-24
3.5.4 Communication Interface Ethernet (Function Groups IEC, GOOSE and VINP) 3-26
3.6 IRIG-B Clock Synchronization (Function Group IRIGB) 3-51
3.7 Configurable Function Keys (Function Group F_KEY) 3-52
3.8 Configuration and Operating Mode of the Binary Inputs (Function Group INP) 3-54
3.9 Measured Data Input (Function Group MEASI) 3-56
3.9.1 Direct Current Input on the Analog (I/O) Module Y 3-57
3.9.2 Input for Connection of a Resistance Thermometer 3-60
3.10 Configuration, Operating Mode, and Blocking of the Output Relays (Function Group OUTP) 3-62
3.10.1 Configuration of the Output Relays 3-62
3.10.2 Operating Mode of the Output Relays 3-62
3.10.3 Blocking the Output Relays 3-63
3.10.4 Testing the Output Relays 3-64
3.11 Measured Data Output (Function Group MEASO) 3-65
3.11.1 General Settings 3-65
3.11.2 BCD Measured Data Output 3-67
3.11.3 Analog Measured Data Output 3-70
3.11.4 Output of “External” Measured Data 3-76
3.12 Configuration and Operating Mode of the LED Indicators (Function Group LED) 3-77
3.12.1 Configuring the LED Indicators 3-77
3.12.2 Layout of the LED Indicators 3-77
3.12.3 Operating Mode of the LED Indicators 3-78
3.13 Main Functions of the P633 (Function Group MAIN) 3-80
3.13.1 Conditioning of the Measured Values 3-80
3.13.2 Phase Reversal Function 3-83
3.13.3 Disconnecting Transformer Ends 3-84
3.13.4 Selection of the Residual Current to be Monitored 3-86

3.13.5 Forming a Virtual Transformer End ... 3-87
3.13.6 Operating Data Measurement ... 3-89
3.13.7 Configuring and Enabling the Device Functions ... 3-100
3.13.8 Activation of “Dynamic Parameters” ... 3-102
3.13.9 Function Blockings ... 3-102
3.13.10 Multiple Blocking ... 3-104
3.13.11 Blocked/Faulty ... 3-105
3.13.12 Coupling between Control and Protection for the CB Signals ... 3-105
3.13.13 Multiple Signaling ... 3-107
3.13.14 Multiple Signaling of the Measuring Circuit Monitoring Function ... 3-108
3.13.15 Starting Signals and Tripping Logic ... 3-108
3.13.16 Communication Error ... 3-111
3.13.17 Time Tagging and Clock Synchronization ... 3-112
3.13.18 Resetting Actions ... 3-113
3.13.19 Assigning Communications Interfaces to Physical Communications Channels ... 3-115
3.13.20 Test Mode ... 3-116
3.14 Parameter Subset Selection (Function Group PSS) ... 3-117
3.15 Self-Monitoring (Function Group SFMON) ... 3-119
3.15.1 Tests During Start-up ... 3-119
3.15.2 Cyclic Tests ... 3-119
3.15.3 Signals ... 3-119
3.15.4 Device Response ... 3-120
3.15.5 Monitoring Signal Memory ... 3-121
3.15.6 Monitoring Signal Memory Time Tag ... 3-121
3.16 Operating Data Recording (Function Group OP_RC) ... 3-122
3.17 Monitoring Signal Recording (Function Group MT_RC) ... 3-123
3.18 Overload Data Acquisition (Function Group OL_DA) ... 3-124
3.18.1 Overload Duration ... 3-124
3.18.2 Acquiring Measured Overload Data from the Thermal Overload Protection ... 3-125
3.19 Overload Recording (Function Group OL_RC) ... 3-126
3.19.1 Start of Overload Recording ... 3-126
3.19.2 Counting Overload Events ... 3-126
3.19.3 Time Tagging ... 3-126
3.19.4 Overload Logging ... 3-127
3.20 Fault Data Acquisition (Function Group FT_DA) ... 3-128
3.20.1 Running Time and Fault Duration ... 3-129
3.20.2 Fault Data Acquisition Time ... 3-130
3.20.3 Acquisition of the Fault Currents ... 3-131
3.20.4 Acquisition of the Differential and Restraining Currents ... 3-132
3.20.5 Fault Data Reset ... 3-134
3.21 Fault Recording (Function Group FT_RC) ... 3-135
3.21.1 Start of Fault Recording ... 3-135
3.21.2 Fault Counting ... 3-136
3.21.3 Time Tagging ... 3-136
3.21.4 Fault Recordings ... 3-137
3.21.5 Fault Value Recording ... 3-138
3.22 Differential Protection (Function Group DIFF) ... 3-140
3.22.1 Enabling or Disabling Differential Protection ... 3-140
3.22.2 Amplitude Matching ... 3-141
3.22.3 Vector Group Matching ... 3-145
3.22.4 Zero-sequence Current Filtering ... 3-145
3.22.5 Tripping Characteristics ... 3-148
3.22.6 Rapid (high-set) Differential Protection ... 3-151
3.22.7 Inrush Stabilization (2nd Harmonic Restraint) ... 3-152

3.22.8 Overfluxing Stabilization (5th Harmonic Restraint) ... 3-154
3.22.9 Saturation Discriminator ... 3-155
3.22.10 Measured Operating Data of Differential Protection ... 3-155
3.23 Ground Differential Protection (Function Groups REF_1 to REF_3) ... 3-157
3.23.1 Enabling or Disabling Ground Differential Protection ... 3-157
3.23.2 Blocking ground differential protection ... 3-157
3.23.3 Amplitude Matching ... 3-158
3.23.4 Operating Modes ... 3-160
3.23.5 Idiff>>> Threshold ... 3-164
3.23.6 Applying Current Transformer Supervision ... 3-164
3.23.7 Measured Operating Data of Ground Differential Protection ... 3-164
3.23.8 Protection of Autotransformers ... 3-165
3.24 Definite-Time Overcurrent Protection (Function Groups DTOC1 to DTOC3) ... 3-168
3.24.1 Enabling or Disabling DTOC Protection ... 3-168
3.24.2 Phase Current Stages ... 3-170
3.24.3 Negative-Sequence Current Stages ... 3-172
3.24.4 Residual Current Stages ... 3-173
3.24.5 General Starting ... 3-175
3.24.6 Counters of the DTOC Protection Function ... 3-175
3.25 Inverse-time Overcurrent Protection (Function Groups IDMT1 to IDMT3) ... 3-176
3.25.1 Enabling or Disabling IDMT Protection ... 3-176
3.25.2 Time-Dependent Characteristics ... 3-178
3.25.3 Phase Current Stage ... 3-182
3.25.4 Negative-Sequence Current Stage ... 3-183
3.25.5 Residual Current Stage ... 3-185
3.25.6 Hold Time ... 3-186
3.25.7 General Starting ... 3-187
3.25.8 Counters of the IDMT Protection Function ... 3-188
3.26 Thermal Overload Protection (Function Groups THRM1 and THRM2) ... 3-189
3.26.1 Enabling or Disabling Thermal Overload Protection ... 3-189
3.26.2 Readiness of Thermal Overload Protection ... 3-190
3.26.3 Selection of Current ... 3-191
3.26.4 Tripping Characteristics ... 3-192
3.26.5 Coolant Temperature Acquisition ... 3-193
3.26.6 Warning Signal ... 3-195
3.27 Time-Voltage Protection (Function Group V<>) ... 3-197
3.27.1 Disabling and Enabling V<> Protection ... 3-197
3.27.2 V<> Protection Readiness ... 3-197
3.27.3 Voltage Monitoring ... 3-197
3.28 Over-/Underfrequency Protection (Function Group f<>) ... 3-200
3.28.1 Disabling or Enabling Over-/Underfrequency Protection ... 3-200
3.28.2 Undervoltage Blocking and Evaluation Time ... 3-201
3.28.3 Operating Modes of Over-/Underfrequency Protection ... 3-201
3.28.4 Frequency Monitoring ... 3-201
3.28.5 Frequency Monitoring Combined with Differential Frequency Gradient Monitoring (df/dt) ... 3-201
3.28.6 Frequency Monitoring Combined with Mean Frequency Gradient Monitoring (Δf/Δt) ... 3-202
3.28.7 f_{min}/f_{max} Measurement ... 3-204
3.29 Overfluxing Protection (Function Group V/f) ... 3-205
3.29.1 Enabling or Disabling Overfluxing Protection ... 3-205
3.29.2 Conditioning the Measured Value ... 3-205
3.29.3 Fixed-time Warning Stage ... 3-206
3.29.4 Fixed-time Tripping Stage ... 3-206
3.29.5 Variable-time Tripping Stage ... 3-206
3.30 Current Transformer Supervision (Function Group CTS) ... 3-211

3.30.1 Enabling or Disabling the CTS Function ... 3-211
3.30.2 Blocking CTS ... 3-211
3.30.3 Monitoring Condition ... 3-212
3.30.4 Signaling and Indication ... 3-213
3.30.5 Reset ... 3-215
3.30.6 Multiple Signaling from the CTS Function ... 3-215
3.31 Measuring-Circuit Monitoring (Function Groups MCM_1 to MCM_3) ... 3-217
3.31.1 Enabling or Disabling Measuring-Circuit Monitoring ... 3-217
3.31.2 Measuring-Circuit Monitoring ... 3-217
3.31.3 Multiple Signaling from the Measuring-Circuit Monitoring Function ... 3-218
3.32 Circuit Breaker Failure Protection (Function Groups CBF_1 to CBF_3) ... 3-219
3.32.1 Assigning Transformer Ends ... 3-219
3.32.2 Assigning Circuit Breakers ... 3-219
3.32.3 Assigning the Trip Command ... 3-219
3.32.4 Enabling or Disabling the CBF Function ... 3-219
3.32.5 Readiness of Circuit Breaker Protection ... 3-220
3.32.6 Detecting a CB Tripping ... 3-221
3.32.7 Current flow monitoring ... 3-221
3.32.8 Evaluation of CB Status Signals ... 3-222
3.32.9 Startup Criteria ... 3-223
3.32.10 Trip Commands ... 3-225
3.32.11 Starting Trigger ... 3-226
3.32.12 Fault Behind CB Protection ... 3-226
3.32.13 CB Synchronization Supervision ... 3-227
3.33 Limit Value Monitoring (Function Group LIMIT) ... 3-228
3.33.1 Enabling or Disabling the Limit Value Monitoring Function ... 3-228
3.33.2 Monitoring the Linearized Measured DC Values ... 3-228
3.33.3 Monitoring the Measured Temperature Value ... 3-229
3.34 Limit Value Monitoring (Function Groups LIM_1 to LIM_3) ... 3-231
3.34.1 Monitoring Minimum and Maximum Phase Currents ... 3-231
3.35 Transformer Monitoring (Function Group TRMON) ... 3-233
3.36 Programmable Logic (Function Groups LOGIC and LOG_2) ... 3-234
3.37 Control and Monitoring of Switchgear Units (Function Groups DEV01 to DEV03) ... 3-242
3.37.1 Bay Type Selection ... 3-242
3.37.2 Enable for Switch Commands Issued by the Control Functions ... 3-244
3.37.3 Designation of External Devices ... 3-246
3.37.4 Defining a Bay Panel Type ... 3-246
3.37.5 Processing Status Signals from Manually Operated Switchgear Units ... 3-248
3.37.6 Functional Sequence for Controllable Switchgear Units ... 3-249
3.38 Interlocking Logic (Function Group ILOCK) ... 3-262
3.38.1 IEC 61850 Reporting ... 3-263
3.39 Single-Pole Commands (Function Group CMD_1) ... 3-265
3.40 Single-Pole Signals (Function Group SIG_1) ... 3-266
3.40.1 Acquisition of Binary Signals for Control ... 3-267
3.41 Binary Counts (Function Group COUNT) ... 3-272
3.41.1 Enable/Disable the Counting Function ... 3-272
3.41.2 Debouncing ... 3-272
3.41.3 Counting Function ... 3-272
3.41.4 Transmitting the Counter Values via Communications Interface ... 3-272
3.41.5 Counter Values Reset ... 3-273
4 Design ... 4-1
4.1 Designs ... 4-2

4.2 Dimensional Drawings 4-4
4.2.1 Dimensional Drawings for the 40 TE Case 4-4
4.2.2 Dimensional Drawings for the 84 TE Case 4-6
4.2.3 Detachable HMI 4-7
4.3 Hardware Modules 4-9

5 Installation and Connection 5-1
5.1 Unpacking and Packing 5-4
5.2 Checking Nominal Data and Design Type 5-5
5.3 Location Requirements 5-6
5.3.1 Environmental Conditions 5-6
5.3.2 Mechanical Conditions 5-6
5.3.3 Electrical Conditions for Auxiliary Voltage of the Power Supply 5-6
5.3.4 Electromagnetic Conditions 5-6
5.4 Installation 5-7
5.5 Protective and Operational Grounding 5-14
5.6 Connection 5-16
5.6.1 Connecting Measuring and Auxiliary Circuits 5-16
5.6.2 Connecting the IRIG-B Interface 5-21
5.6.3 Connecting the Communication Interfaces 5-21
5.7 Location and Connection Diagrams 5-26
5.7.1 Location Diagrams P633-419/420/421 5-26
5.7.2 Terminal Connection Diagrams P633-419/420/421 5-27

6 Local Control (HMI) 6-1
6.1 Local Control Panel (HMI) 6-1
6.2 Display and Keypad 6-2
6.2.1 Text Display 6-2
6.2.2 Display Illumination 6-2
6.2.3 Contrast of the Display 6-2
6.2.4 Short Description of Keys 6-3
6.3 Display Levels 6-5
6.4 Availability of the Bay Panel 6-6
6.5 Display Panels 6-7
6.6 Menu Tree and Data Points 6-8
6.7 List Data Points 6-9
6.8 Note Concerning the Step-by-Step Descriptions 6-10
6.9 Configurable Function Keys 6-11
6.9.1 Configuration of the Function Keys F1 to Fx 6-11
6.9.2 Function Keys F1 to Fx as Control Keys 6-13
6.10 Changing Between Display Levels 6-14
6.11 How to use Cyber Security Features 6-15
6.11.1 Usage 6-15
6.12 Control at Panel Level 6-17
6.12.1 Bay Panel 6-17
6.13 Control at the Menu Tree Level 6-21
6.13.1 Navigation in the Menu Tree 6-21
6.13.2 Switching Between Address Mode and Plain Text Mode 6-22
6.13.3 Change-Enabling Function 6-23
6.13.4 Changing Parameters 6-26
6.13.5 List Parameters 6-29

6.13.6 Memory Readout 6-32
6.13.7 Resetting 6-35
6.13.8 Password-Protected Control Actions 6-37
6.13.9 Changing the Password 6-39

7 Settings 7-1
7.1 Parameters 7-1
7.1.1 Device Identification 7-4
7.1.2 Configuration Parameters 7-13
7.1.3 Function Parameters 7-88

8 Information and Control Functions 8-1
8.1 Operation 8-1
8.1.1 Cyclic Values 8-2
8.1.2 Control and Testing 8-173
8.1.3 Operating Data Recording 8-182
8.2 Events 8-183
8.2.1 Event Counters 8-183
8.2.2 Measured Event Data 8-186
8.2.3 Event Recording 8-191

9 IEC 61850 Settings via IED Configurator 9-1
9.1 Manage IED 9-2
9.2 IED Details 9-3
9.3 Communications 9-4
9.4 SNTP 9-7
9.4.1 General Config 9-7
9.4.2 External Server 1 9-7
9.4.3 External Server 2 9-7
9.5 Dataset Definitions 9-8
9.6 GOOSE Publishing 9-9
9.6.1 System/LLN0 9-9
9.7 GOOSE Subscribing 9-11
9.7.1 Mapped Inputs 9-11
9.8 Report Control Blocks 9-14
9.8.1 System/LLN0 9-14
9.9 Controls 9-15
9.9.1 Control Objects 9-15
9.9.2 Uniqueness of Control 9-15
9.10 Measurements 9-17
9.11 Configurable Data Attributes 9-18
9.11.1 System/LLN0 9-18

10 Commissioning 10-1
10.1 Safety Instructions 10-1
10.2 Commissioning Tests 10-5
10.2.1 Preparation 10-5
10.2.2 Cyber Security Commission 10-7
10.2.3 Testing 10-9
10.2.4 Checking the Binary Signal Inputs 10-9
10.2.5 Checking the Output Relays 10-10
10.2.6 Checking the Protection Function 10-10

10.2.7 Checking Control Functions 10-13
10.2.8 Completing Commissioning 10-14

11 Troubleshooting 11-1

12 Maintenance 12-1
12.1 Maintenance Procedures in the Power Supply Area 12-2
12.2 Routine Functional Testing 12-4
12.3 Analog Input Circuits 12-5
12.4 Binary Opto Inputs 12-6
12.5 Binary Outputs 12-7
12.6 Communication Interfaces 12-8

13 Storage 13-1

14 Accessories and Spare Parts 14-1

15 Order Information 15-1

A1 Function Groups A1-1

A2 Internal Signals A2-1

A3 Glossary A3-1
Modules A3-1
Symbols A3-1
Examples of Signal Names A3-7
Symbols Used A3-8

A4 Telecontrol Interfaces A4-1
A4.1 Telecontrol Interface per EN 60870-5-101 or IEC 870-5-101 (Companion Standard) A4-1
A4.1.1 Interoperability A4-1
A4.2 Communication Interface per IEC 60870-5-103 ..... A4-9
A4.2.1 Interoperability A4-9

A5 List of Bay Types A5-1
A5.1 Key to the List of Bay Types A5-1
A5.2 Predefined Bay Types A5-4
A5.2.1 Feeder Bays A5-4
A5.2.2 Bus Sectionalizer Bays A5-188
A5.2.3 Bus Coupler Bays A5-270
A5.2.4 Bus Coupler and Sectionalizer Bays A5-316
A5.2.5 Busbar Measurement Bays A5-320
A5.2.6 Busbar Grounding Bays A5-358
A5.2.7 Other Bay Types A5-362

A6 P633 Version History A6-1

1 Application and Scope

1.1 Overview - P633

The P633 differential protection device is intended for the fast and selective short-circuit protection of transformers, motors, generators and other installations with 3 windings.

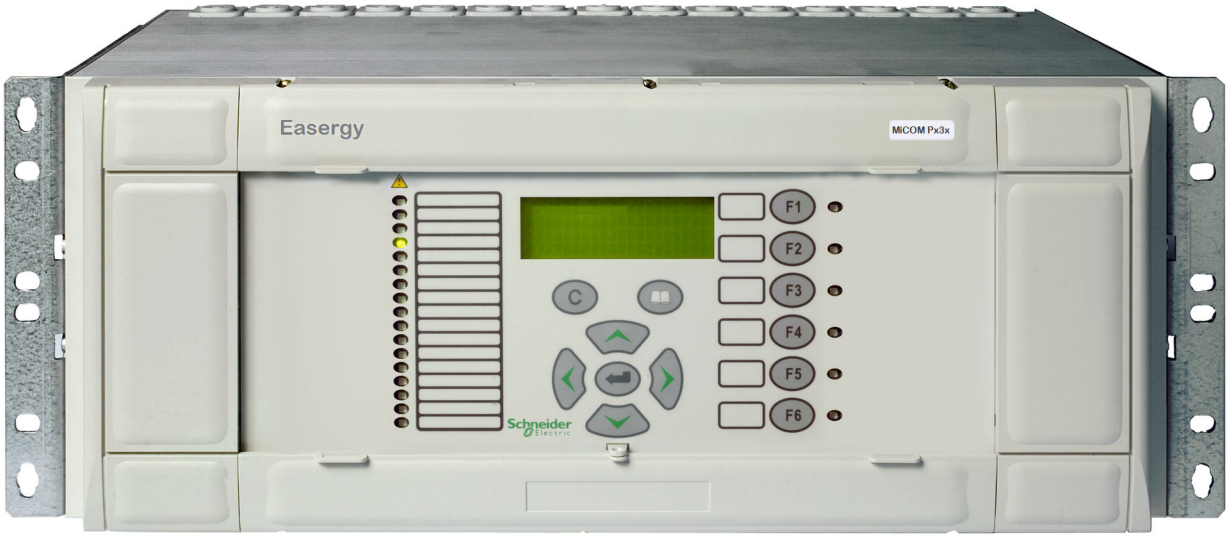

Fig. 1-1: P633 in a 84 TE sized case.

Fig. 1-2: P633 in a 40 TE sized case.

The P633 provides high-speed three-system differential protection using a triple-slope characteristic and two high-set differential elements in combination with transformer inrush restraint, overfluxing restraint and through-stabilization. Amplitude and vector group matching is done just by entering the nominal values of transformer windings and associated current transformers. An (optional) overreaching current measuring circuit monitoring function will prevent unwanted tripping by differential protection for faults in the CT's secondary circuit.

For ring bus and breaker-and-a-half applications a virtual winding can be defined for which the current measuring inputs are based on the vector sum of currents from two or three freely selectable windings.

Phase swapping allows motor / generator protection applications with enlarged protection zones.

In addition many supplementary protective functions are incorporated in the devices. These can be individually configured and cancelled.

The relevant protection parameters can be stored in four independent parameter subsets in order to adapt the protection device to different operating and power system management conditions.

The control functions are designed for the control of up to three electrically operated switchgear units (available if 6I6O fitted, only one elsewhere) equipped with plant status signaling and located in the bay of a medium-voltage substation (or a high-voltage station with basic topology). The P633 has almost 80 predefined Bay Types stored for selection.

The number of external auxiliary devices required is largely minimized by the integration of binary signal inputs operating from any auxiliary voltage, and versatile relay output contacts, by the direct connection option for current and voltage transformers, and by the comprehensive interlocking capabilities. This simplifies the handling of switch bay protection and control technology from planning to commission.

During operation, the user-friendly interface makes it easy to set the device parameters and allows safe operation of the substation by preventing non-permissible switching operations.

These features give the user the means to adapt the P633 to the protection and control capacity required in a specific application.

The powerful programmable logic provided by the protection device also makes it possible to accommodate special applications.

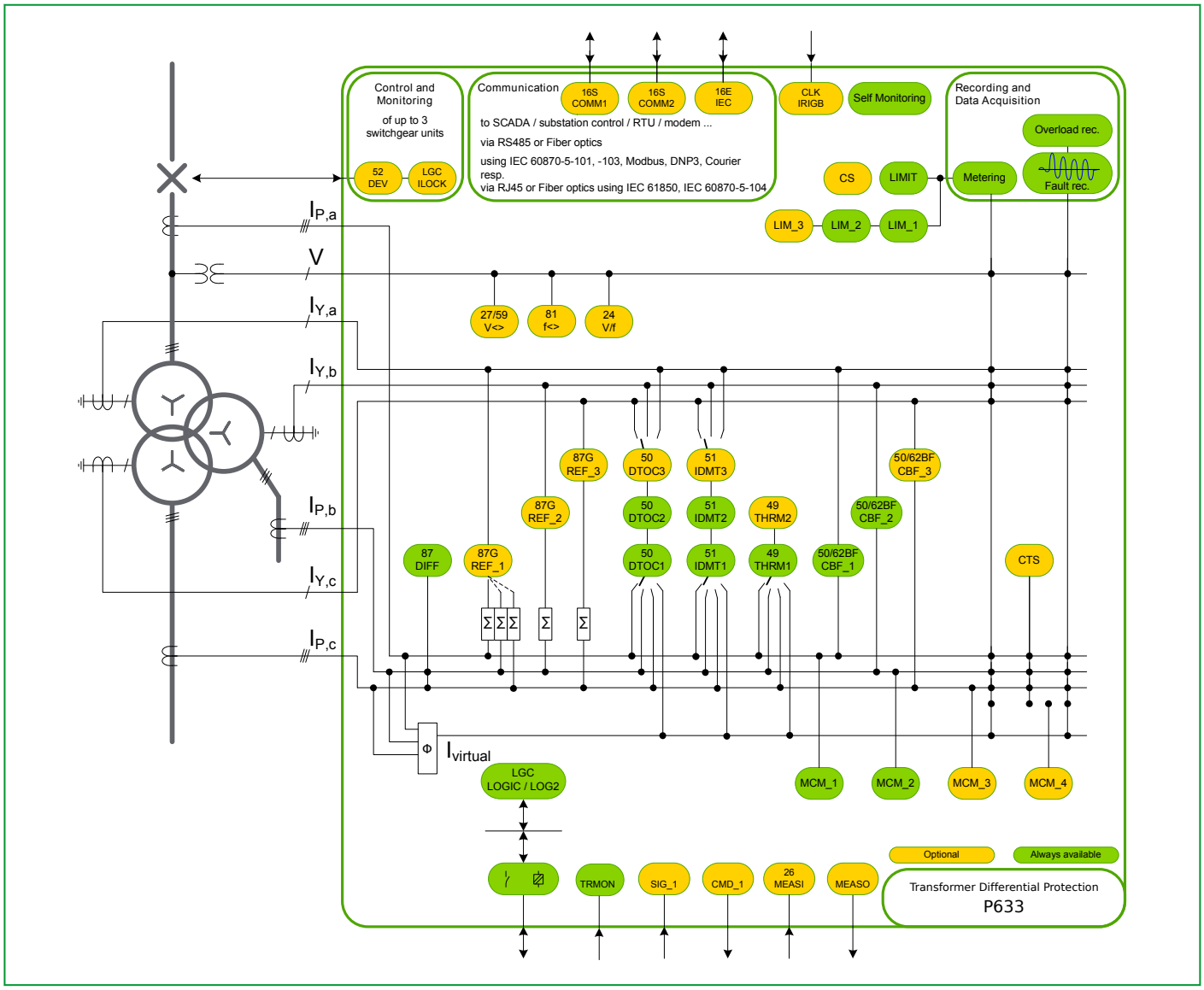

Fig. 1-3: Function diagram.

For a list of all available function groups see the Appendix.

1.1.1 Design

The P633 is modular in design. The plug-in modules are housed in a robust aluminum case and electrically interconnected via one analog p/c board and one digital p/c board.

1.2 Including Function Groups in the Configuration

Functions listed in the tables in Section 1.3, (p. 1-5) are self-contained function groups and can be individually configured or de-configured according to the specific application requirements by using the Easergy Studio operating program. Unused or cancelled function groups are hidden to the user, thus simplifying the menu of the Easergy Studio.

This concept provides a large choice of functions and makes wide-ranging application of the protection device possible, with just one model version. On the other hand, simple and clear parameter settings can be made.

In this way the protection and control functions can be included in or excluded from the configuration.

Example

For example, the current transformer supervision (function group CTS)

- can be **included in the configuration** by setting
  CTS: Function group CTS to *With*
- can be **excluded from the configuration** by setting
  CTS: Function group CTS to *Without*

1.3 Overview of Function Groups - Part 1

The following tables list the function groups that can be included in or excluded from the configuration of the P633.

✓ = Standard; (✓) = Ordering option.

Protection functions				P633
ANSI	**IEC 61850**	**Function group**		
		Abbrev.	**Description**	
87T	PhsPDIF1	DIFF	Differential protection, phase selective	3 wind.
	PHAR1		Inrush stabilization (functionality that is part of the DIFF function group)	✓
87N		REF_x	Restricted earth-fault protection	3
50TD P/ Q/ N	DtpPhs- / DtpEft- / DtpNgsPTCOx	DTOCx	Definite-time overcurrent protection, 3 stages, phase-, negative-sequence-, residual/starpoint-overcurrent	3
51 P/ Q/ N	ItpPhs- / ItpEft- / ItpNgsPTCOx	IDMTx	Inverse-time overcurrent protection, one stage, phase-, negative-sequence-, residual/starpoint-overcurrent	3
49	ThmPTTR1	THRMx	Thermal overload protection	2
27/ 59 P/ Q/ N	VtpPhs- / VtpNgs- / VtpPss- / VtpRefPTyVx	V<>	Time-voltage Protection	1
81	FrqPTyFx	f<>	Over / Underfrequency protection	1
24		V/f	Overfluxing protection	1
50 BF	RBRFx	CBF_x	Circuit breaker failure protection	3
		CTS	Current transformer supervision	1
30/ 74	AlmGGIO1	MCM_x	Measuring-circuit monitoring	3
		LIMIT LIM_x	Limit value monitoring	3
		TRMON	Transformer monitoring	✓
LGC	PloGGIOx	LOGIC / LOG_2	Programmable logic	✓

Control functions				P633
ANSI	IEC 61850	Function group		
		Abbrev.	Description	
52	XCBRx / XSWIx / CSWIx	DEV01 to DEV03	Control and monitoring of up to three switchgear units	(3)
	CtlGGIO2	CMD_1	Single-pole commands	(12)
	CtlGGIO1	SIG_1	Single-pole signals	(12)
LGC		ILOCK	Interlocking logic	(✓)

Communication functions				P633
ANSI	IEC 61850	Function group		
		Abbrev.	Description	
16S		COMM1, COMM2	2 communication interfaces serial, RS 422 / 485 or fiber optic	(✓)
CLK		IRIGB	Time synchronization IRIG-B	(✓)
16E		IEC	Communication interface Ethernet	(✓)
16E	GosGGIO1	GOOSE	IEC 61850	(✓)
		CS	Cyber Security	(✓)
		VINP	Virtual Inputs	(✓)

Measured value functions				P633
ANSI	IEC 61850	Function group		
		Abbrev.	Description	
26	RtdGGIO1 IdcGGIO1	MEASI MEASO	Analog inputs and outputs ● RTD input ● 1× Measuring data input 20 mA ● 2× Measuring data output 20 mA	(✓) (✓) (✓) (✓)

1.4 Overview of Function Groups - Part 2

The following tables list the function groups that are generally available for the P633, and which cannot be excluded from the configuration.

✓ = Standard; (✓) = Ordering option.

Measuring Inputs				P633
ANSI	IEC 61850	Function group		
		Abbrev.	Description	
			Measuring inputs ● Phase currents ● Residual current or star-point current ● Voltage	● 3×3 ● 3 ● 1

Binary Inputs and outputs				P633	
ANSI	IEC 61850	Function group			
		Abbrev.	Description	40 TE	84 TE
		● INP ● OUTP	Binary inputs and outputs ● Optical coupler inputs ● Output relays	● 4 … 10 ● 8 … 14	● 4 … 54 ● 8 … 40

General functions				P633
ANSI	IEC 61850	Function group		
		Abbrev.	Description	
		DVICE	Device	✓
		LOC	Local control panel	✓
		PC	PC link	✓
		F_KEY	6 configurable function keys	✓
		LED	LED indicators	✓
		MAIN	Main function	✓
	LLN0.SGCB	PSS	Parameter subset selection	✓
		SFMON	Comprehensive self-monitoring	✓
		OP_RC	Operating data recording (time-tagged event logging)	✓
		MT_RC	Monitoring Signal Recording	✓
		OL_DA	Overload Data Acquisition	✓
		OL_RC	Overload recording (time-tagged event logging)	✓
		FT_DA	Fault data acquisition for a particular, settable point in time during a fault	✓
	PTRCx / RDRE1	FT_RC	Fault recording (time-tagged event logging together with fault value recording of the phase and residual currents as well as the voltage)	✓

1.5 Control Functions

Control functions are designed for the control of up to 3 electrically operated switchgear units equipped with electrical check-back signaling.

For the control of switchgear units either the binary inputs or the optional communication interface or the function keys of the local control panel can be used.

Up to 12 operation signals can be acquired though binary signal inputs and they are processed according to their primary significance (e.g. CB readiness). Each binary signal input for signals from switchgear and single-pole operations can have the debouncing and chatter suppression from three groups assigned, for which the debouncing and chatter time can be individually set.

For the acquisition of binary counters, up to four binary inputs may be configured. The contents of these counters are transmitted cyclically via the serial link. The counter values are stored so that they are not lost if the supply voltage should fail. Counting continues from the stored value as the initial value when the P633 restarts.

The P633 sends control signals only after it has checked the readiness and validity to carry out such commands, and it then monitors the operating time of the switchgear units. If the protection device detects that a switchgear unit has failed, it will signal this information (e.g. by configuration to a LED indicator).

Before a switching command is issued the interlocking logic on the P633 checks if this new switchgear status corresponds with the bay and station topology. The interlocking logic is stored in form of bay interlocking, with and without station interlocking, for each Bay Panel in the default setting. The interlocking conditions can be adapted to the actual bay and station topology. Interlocking display and operation correspond to the programmable logic.

When the P633 is included in a station control system the local interlocking can easily be integrated with the overall system interlocking.

When the P633 is not included in a station control system then bay interlocking is applied without station interlocking.

If the bay and station topology are found to be valid the switching command is issued. If a non-permissible status would result from the switching action then the issuing of such a switching command is refused and an alarm is issued.

If not all binary outputs are required by the bay type then these vacant binary outputs can be freely utilized for other purposes.

Besides issuing switching commands binary outputs may also be triggered by persistent commands.

1.6 Configurable Function Keys

To the right of the text display, there are six freely configurable function keys available. These may be used for easy control operation access.

1.7 Inputs and Outputs

If at least one binary module X(6I 6O) is fitted, 3 switchgear units can be controlled by using pre-defined standard bay-types.

The nominal current and voltage values of the measuring inputs on the P633 can be set with the function parameters.

The nominal voltage range of the optical coupler inputs is 24 to 250 V DC. As an option binary signal input modules with a higher operate threshold are available.

The auxiliary voltage input for the power supply is also designed for an extended range. The nominal voltage ranges are 60 to 250 V DC and 100 to 230 V AC. A 24 to 60 V DC version is also available.

All output relays can be utilized for signaling and command purposes.

The optional PT 100 input is lead-compensated, balanced and linearized for PT 100 resistance thermometers as per IEC 751 / DIN EN 60751.

The optional 0 to 20 mA input provides open-circuit and overload monitoring, zero suppression defined by a setting, plus the option of linearizing the input variable via 20 adjustable interpolation points.

Two selectable measured values (cyclically updated measured operating data and stored measured fault data) can be output as a burden-independent direct current via the two optional 0 to 20 mA outputs. The characteristics are defined via 3 adjustable interpolation points allowing a minimum output current (4 mA, for example) for slave-side open-circuit monitoring, knee-point definition for fine scaling, and a limitation to lower nominal currents (10 mA, for example). Where sufficient output relays are available, a selectable measured value can be output in BCD-coded form by contacts.

1.8 Control and Display

- Local control panel with an LC display containing 4 × 20 alphanumeric characters.
- 23 LED indicators, 18 of which allow freely configurable function assignment for the colors red and green. Furthermore there are various operating modes and flashing functions available.
- PC interface.
- One or two communication interface(s) for connection to a substation control system (optional).

1.9 Information Interfaces

Information is exchanged through the local control panel, the PC interface, or two optional communication interfaces (channel 1 and channel 2).

Using the first channel of the communication interfaces (COMM1), the P633 can be wired either to the substation control system or to a telecontrol system. This channel is optionally available with a switchable protocol (per IEC 60870-5-103, IEC 870-5-101, DNP 3.0, MODBUS or Courier).

The second communication interface (COMM2, communication protocol per IEC 60870-5-103 only) is designed for remote control.

The 4 available Ethernet modules variants provide IEC 61850 communication with single Ethernet or alternatively redundancy PRP, HSR or RSTP protocols with RJ45 wire or LC fiber optic connectors and RJ45 service interface.

External clock synchronization can be accomplished via one of the communication protocols or by using the optional IRIG-B input.

2 Technical Data

2.1 Conformity

Notice

Applicable to P633, version -312 -419/420/421 -661.

Declaration of Conformity

The product designated “P633 Transformer Differential Protection Device” has been designed and manufactured in conformance with the EMC and safety standards IEC 60255-26 and IEC 60255-27 and with the “EMC Directive” and the “Low Voltage Directive” issued by the Council of the European Community.

2.2 General Data

2.2.1 General Device Data

Design

- Surface-mounted case suitable for wall installation, or
- Flush-mounted case for 19″ cabinets and for control panels.

Installation Position

- Vertical ± 30°.

Degree of Protection

Per DIN VDE 0470 and IEC 60529.

- IP 52 for the front panel.
- Flush-mounted case:
  - IP 50 for the case (excluding the rear connection area)
  - IP 20 for the rear connection area, pin-terminal connection
  - IP 10 for the rear connection area, ring-terminal connection
- Surface-mounted case:
  - IP 50 for the case
  - IP 50 for the fully enclosed connection area with the supplied rubber grommets fitted

Weight

- 40 TE case: Approx. 7 kg
- 84 TE case: Approx. 11 kg

Dimensions and Connections

See dimensional drawings (Section 4.2, (p. 4-4)), and the location and terminal connection diagrams (Section 5.7, (p. 5-26)).

Terminals

PC interface (X6)

- EIA RS232 (DIN 41652) connector, type D-Sub, 9-pin

Communication interfaces COMM1, COMM2

- Fiber (X7, X8)
  - F-SMA optical fiber connection per IEC 60874-2 (for plastic fibers), or
  - optical fiber connection BFOC-ST® connector 2.5 per IEC 60874-10-1 (for glass fibers).

    (ST® is a registered trademark of AT&T Lightguide Cable Connectors.)
- Wire leads (X9, X10)
  - M2 threaded terminal ends for wire cross-sections up to 1.5 mm² (US: AWG16).

Communication interface IEC 61850

- Fiber (X13, X14)
  - Industry Standard Small Form Pluggable (SFP) package, LC duplex connector optical interface.
- Wire leads (X15)
  - RJ45 connector.
- IRIG-B Interface (X11)
  - 3 pin terminal block.

Current measuring inputs (conventional inputs)

- Threaded terminal ends, pin-type cable lugs: M5, self-centering with cage clamp to protect conductor cross-sections ≤ 4 mm² (US: AWG12), or
- Threaded terminal, ring-terminal connection: M4.

Other inputs and outputs

- Threaded terminal ends, pin-type cable lugs: M3, self-centering with cage clamp to protect conductor cross-sections 0.2 to 2.5 mm² (US: AWG25 to AWG14), or
- Threaded terminal ends, ring-type cable lugs: M4.

Creepage Distances and Clearances

- Per IEC 60255-27.
- Pollution degree 3, working voltage 250 V,
- overvoltage category III, impulse test voltage 5 kV.

2.3 Tests

2.3.1 Type Tests

2.3.1.1 Electromagnetic Compatibility (EMC)

Conducted Emission

Per IEC 60255-26 and CISPR 22 Class A.

- 0.15 - 0.5 MHz, 79 dBµV (quasi peak) 66 dBµV (average).
- 0.5 - 30 MHz, 73 dBµV (quasi peak) 60 dBµV (average).

Radiated Emission

Per IEC 60255-26 and CISPR 11 Class A.

- 30 - 230 MHz, 40 dBµV / m at 10 m measurement distance.
- 230 - 1 GHz, 47 dBµV / m at 10 m measurement distance.

100 kHz and 1 MHz Damped Oscillatory Test

Per IEC 60255-26 and IEC 61000-4-18. level 3.

- Frequency: 100 kHz and 1 MHz.
- Common mode test level: ±2.5 kV.
- Differential mode test level : ±1 kV.

Immunity to Electrostatic Discharge

Per IEC 60255-26 and IEC 61000-4-2, severity level 4.

- 15 kV discharge in air to user interface, display, to all communication ports (outer earthed shell).
- 8 kV contact discharge to any metal part of the front of the product.

Immunity to Radiated Electromagnetic Field

Per IEC 60255-26 and IEC 61000-4-3, severity level 3.

- 10 V / m, 80 MHz to 1 GHz and 1.4 GHz to 2.7 GHz with 1 kHz 80 % AM.
- Spot tests at 80 MHz, 160 MHz, 380 MHz, 450 MHz, 900 MHz, 1850 MHz, and 2150 MHz.

Electrical Fast Transient or Burst Test

Per IEC 60255-26, Zone A.

- ±4 kV, 5 kHz applied directly to auxiliary supply, CTs, VTs, opto inputs, output relays.
- ±2 kV, 5 kHz applied to communication ports.

Per IEC 61000-4-4, Severity level 4.

- ±4.0 kV, 5 kHz applied to all power supply and earth port.
- ±2.0 kV, 5 kHz applied to all other ports.

EFT/Burst waveform parameter.

- Rise time of one pulse: 5 ns.
- Impulse duration (50 % value): 50 ns.
- Burst duration: 15 ms.
- Burst cycle: 300 ms.
- Source impedance: 50 Ω.

Power Frequency Immunity

Per IEC 60255-26, severity Zone A.

Phase-to-phase

- RMS value 150 V.
- Coupling resistance 100 Ω.
- Coupling capacitor 0.1 µF, for 10 s.

Phase-to-ground

- RMS value 300 V.
- Coupling resistance 220 Ω.
- Coupling capacitor 0.47 µF, for 10 s.

To comply with this standard, it is suggested to set the parameter (010 220) INP: Filter to *6 [steps]*.

Surge Immunity Test

Per IEC 60255-26 and IEC 61000-4-5, severity Zone A or level 4.

- ±4 kV line to earth and ±2 kV line to line for power supply, CTs, VTs, opto inputs and output contacts.
- ±4 kV cable shielded layer to ground for communication ports.

Surge waveform parameter.

- Open-circuit voltage front time / time to half-value: 1.2 / 50 µs.
- Short-circuit current front time / time to half-value: 8 / 20 µs.

CDN parameter.

- 12 Ω / 9 uF (line to earth) and 2 Ω / 18 uF (line to line) for power supply port.
- 42 Ω / 0.5 uF (line to earth) and 42 Ω / 0.5 uF (line to line) for IO ports.
- 2 Ω cable shielding layer to ground for shielding communication ports.

Conducted Immunity Test

Per IEC 60255-26 and IEC 61000-4-6, severity level 3.

- Test level: 10 V.
- Test frequency range: 150 kHz - 80 MHz.
- Modulation: 1 kHz sine wave, 80 % AM modulated.
- Spot test frequency: 27 MHz, 68 MHz.

Power Frequency Magnetic Field Immunity

Per IEC 61000-4-8, severity level 4.

- Test frequency: 50 Hz
- Test level: 30 A / m applied continuously, 300 A / m applied for 3 s.

Alternating Component (Ripple) in DC Auxiliary Energizing Quantity

Per IEC 60255-26 and IEC 61000-4-17.

- Test level: 15 % of rated DC value.

2.3.1.2 Insulation

Insulation Resistance

Per IEC 60255-27.

Insulation resistance > 100 MΩ at 500 Vdc.

Creepage Distances and Clearances

Per IEC 60255-27.

Pollution degree 3, Overvoltage category III.

High Voltage Withstand (Dielectric) Test

Per IEC 60255-27.

- 1 kV rms AC for 1 minute between RJ45 ports and the case earth (ground).
- 2 kV rms AC for 1 minute between all other terminals connected together and the case earth. Between all terminals of independent circuits.
- 1 kV rms AC for 1 minute, across open watchdog contacts.
- 1 kV rms AC for 1 minute, across open contacts of output relays.

Impulse Voltage Withstand Test

Per IEC 60255-27.

- Front time: 1.2 µs, Time to half-value: 50 µs.

  Peak value: 1.5 kV, 0.5 J.

  Between RJ45 ports and the case earth (ground).
- Front time: 1.2 µs, Time to half-value: 50 µs,

  Peak value: 5 kV, 0.5 J.

  Between all other independent circuits and the case earth, also between all terminals of independent circuits.

2.3.1.3 Environmental test

Ambient Temperature Range Test

Per IEC 60068-2-1 & IEC 60068-2-2.

- Operating temperature range: -25°C to +55°C (or -13°F to +131°F).
- Storage and transit: -25°C to +70°C (or -13°F to +158°F).

Ambient Humidity Range Test

Per IEC 60068-2-78.

- 21 days at 93 % relative humidity and +40°C.

Per IEC 60068-2-14.

- 5 cycles, -25°C to +55 °C, 1°C / min rate of change.

Per IEC 60068-2-30.

- Damp heat cyclic, six cycles(12 hours + 12 hours), 93 % RH, +25°C to +55°C.

Corrosive Environment Test

Per IEC 60068-2-60: 1995, Part 2, Test Ke, Method (class) 3

Industrial corrosive environment/ poor environmental control, mixed gas flow test.

- 21 days at 75 % relative humidity and 30°C (86°F) with exposure to elevated concentrations of H_2S, NO_2, Cl_2 and SO_2.

2.3.1.4 Mechanical Test

Applicable to the following case variants:

- Surface-mounted 40 TE or 84 TE case
- Flush-mounted 40 TE or 84 TE case

Vibration Test

Per IEC 60255-21-1, test severity class 1.

Frequency range in operation

- 10 to 60 Hz, 0.035 mm, and
- 60 to 150 Hz, 0.5 g

Frequency range during transport

- 10 to 150 Hz, 1 g

Shock Response and Withstand Test, Bump Test

Per IEC 60255-21-2.

Acceleration and pulse duration:

- Shock Response tests are carried out to verify full operability (during operation), test severity class 1:

  5 g for 11 ms.
- Shock Withstand tests are carried out to verify the endurance (during transport), test severity class 1:

  15 g for 11 ms.
- Shock bump tests are carried out to verify permanent shock (during transport), test severity class 1:

  10 g for 16 ms.

Seismic Test

Per IEC 60255-21-3, test procedure A, class 1.

Frequency range

- Horizontal axes of vibration: 1 Hz to 8 Hz with 3.5 mm peak displacement, 8 to 35 Hz with 10 m / s² peak acceleration. 2 x 1 cycle.
- Vertical axis of vibration: 1 Hz to 8 Hz with 1.5 mm peak displacement, 8 to 35 Hz with 5 m / s² peak acceleration. 1 x 1 cycle.

2.4 Environmental Conditions

Temperatures

Per IEC 60255-1 & IEC 60068-2-1

Recommended temperature range

- -5°C to +55°C [+23°F to +131°F].

Limit temperature range

- Operation: -25°C to +55°C [-13°F to +131°F].
- Storage and transport: -25°C to +70°C [-13°F to +158°F].

Ambient Humidity Range

- ≤ 75 % relative humidity (annual mean).
- 21 days at ≤ 95 % relative humidity and 40°C [104°F].
- Condensation not permitted.

Solar Radiation

Direct solar radiation on the front of the device must be avoided.

2.5 Inputs and Outputs

2.5.1 Measuring Inputs

Current Measuring Inputs

- Nominal current I_{nom}: 1 and 5 A AC (adjustable).
- Nominal consumption per phase:
  - 1 A CT burden: < 0.1 VA
  - 5 A CT burden: < 0.3 VA
- Load rating:
  - continuous: $4 \cdot I_{nom}$,
  - for 10 s: $30 \cdot I_{nom}$,
  - for 1 s: $100 \cdot I_{nom}$.
- Nominal surge current: $250 \cdot I_{nom}$.

Voltage Measuring Inputs

- Nominal voltage V_{nom}: 50 to 130 V AC (adjustable).
- Nominal consumption per phase: < 0.3 VA at V_{nom} = 130 V AC.
- Load rating:
  - continuous: 150 V AC
  - for 10 s: 300 V AC

Frequency

- Nominal frequency f_{nom}: 50 Hz and 60 Hz (adjustable).
- Operating range: 0.95 to 1.05 f_{nom}.
- Frequency protection: 40 to 70 Hz.

2.5.2 Binary Signal Inputs

Threshold pickup and drop-off points as per ordering option

- Standard variant with switching threshold at 65% of 24 V DC ($V_{A,min}$)

Special variants with switching thresholds from 58% to 72% of the nominal input voltage (i.e. definitively “low” for V_A < 58% of the nominal supply voltage, definitively “high” for V_A > 72% of the nominal supply voltage).

- Special variant with switching threshold at 65% of 110 V DC ($V_{A,nom}$).
- Special variant with switching threshold at 65% of 127 V DC ($V_{A,nom}$).
- Special variant with switching threshold at 65% of 220 V DC ($V_{A,nom}$).
- Special variant with switching threshold at 65% of 250 V DC ($V_{A,nom}$).

Power consumption per input

- 18 V standard variant:
  V_A = 19 to 110 V DC : 0.5 W ± 30%,
  V_A > 110 V DC: V_A ·5 mA ± 30%.
- Special variants:
  V_A > switching threshold: V_A ·5 mA ± 30%.

The standard variant of binary signal inputs (opto couplers) is recommended in most applications, as these inputs operate with any voltage from 19 V. Special versions with higher pick-up/drop-off thresholds are provided for applications where a higher switching threshold is expressly required.

The maximum voltage permitted for all binary signal inputs is 300 V DC.

2.5.3 IRIG-B Interface

- Minimum / maximum input voltage level
  Demodulated: 2 Vpp / 6 Vpp (peak-peak)
  Modulated: a few hundred mVpp / 10 Vpp
- Electrical isolation: 2 kVrms

2.5.4 Direct Current Input

- Input current: 0 to 26 mA
- Value range: 0.00 to 1.20 $I_{DC,nom}$ ($I_{DC,nom}$ = 20 mA)
- Maximum continuous input current permitted: 50 mA
- Maximum input voltage permitted: 17 V DC
- Input load: 100 Ω
- Open-circuit monitoring: 0 to 10 mA (adjustable)
- Overload monitoring: > 24.8 mA
- Zero suppression: 0.000 to 0.200 $I_{DC,nom}$ (adjustable).

2.5.5 Resistance Thermometer

Only PT 100 permitted for analog (I/O) module, mapping curve per IEC 75.1.

PT 100, Ni 100 or Ni 120 permitted for temperature p/c board (the RTD module).

- Value range: -40.0°C to +215.0°C (-40°F to +419°F).
- 3-wire configuration: max. 20 Ω per conductor.
- Open and short-circuited input permitted.
- Open-circuit monitoring: Θ > +215°C and Θ < -40°C (Θ > +419°F and Θ < -40°F).

2.5.6 Direct Current Output

- Output current: 0 to 20 mA
- Maximum permissible load: 500 Ω
- Maximum output voltage: 15 V

2.5.7 Output Relays

	Binary I/O Module X(6I 6O) for switchgear control.	Binary I/O Module X(4H) with high-break contacts, applicable to DC circuits only.	All other modules
Rated voltage:	250 V DC 250 V AC	250 V DC	250 V DC, 250 V AC.
Continuous current:	8 A	10 A	5 A
Short-duration current:	● 30 A for 0.5 s	● 250 A for 0.03 s, ● 30 A for 3 s	30 A for 0.5 s.
Making capacity:	1000 W (VA) at L/R = 40 ms.	30 A	1000 W (VA) at L/R = 40 ms.
Breaking capacity:	● 0.2 A at 220 V DC and L/R = 40 ms, ● 4 A at 230 V AC and cos φ = 0.4.	● 7500 W resistive or 30 A at 250 V DC, Maximum values: 30 A and 300 V DC. ● 2500 W inductive (L/R = 40 ms) or 10 A at 250 V DC, Maximum values: 10 A and 300 V DC.	● 0.2 A at 220 V DC and L/R = 40 ms, ● 4 A at 230 V AC and cos φ = 0.4.
Operating time:	less than 5 ms	less than 0.2 ms	less than 5 ms
Reset time:	less than 5 ms	less than 8 ms	less than 5 ms

2.5.8 BCD Measured Data Output

Maximum numerical value that can be displayed: 399

2.6 Interfaces

2.6.1 Local Control Panel

Input or output

- With 7 keys and a 4 ×20 character liquid crystal display (LCD).
- With 6 additional function keys.

State and fault signals

- 23 LED indicators (18 freely configurable with function assignments for three colors: red, yellow and green).

2.6.2 PC Interface

- Transmission rate: 300 to 115,200 baud (adjustable)

2.6.3 Serial Communication Interface

The communication module can be provided with up to two communication channels, depending on the module variant. Channel 1 may either be equipped to connect wire leads or optical fibers and channel 2 is only available to connect wire leads.

For communication interface 1, communication protocols based on IEC 870-5-103, IEC 60870-5-101, MODBUS, DNP 3.0, or Courier can be set.

- Transmission rate: 300 to 64000 baud (adjustable).

Communication interface 2 can only be operated with the interface protocol based on IEC 60870-5-103.

- Transmission rate: 300 or 57600 baud (adjustable).

Wire Leads

- Per RS 485 or RS 422, 2 kV isolation
- Distance to be bridged
  - Point-to-point connection: max. 1200 m
  - Multipoint connection: max. 100 m

Plastic Fiber Connection

- Optical wavelength: typically 660 nm
- Optical output: min. -7.5 dBm
- Optical sensitivity: min. -20 dBm
- Optical input: max. -5 dBm
- Distance to be bridged: max. 45 m

  (Distance to be bridged given for identical optical outputs and inputs at both ends, a system reserve of 3 dB, and typical fiber attenuation)

Glass Fiber Connection G 50/125

- Optical wavelength: typically 820 nm
- Optical output: min. -19.8 dBm
- Optical sensitivity: min. -24 dBm
- Optical input: max. -10 dBm
- Distance to be bridged: max. 400 m

  (Distance to be bridged given for identical optical outputs and inputs at both ends, a system reserve of 3 dB, and typical fiber attenuation)

Glass Fiber Connection G 62.5/125

- Optical wavelength: typically 820 nm
- Optical output: min. -16 dBm
- Optical sensitivity: min. -24 dBm
- Optical input: max. -10 dBm
- Distance to be bridged: max. 1,400 m

  (Distance to be bridged given for identical optical outputs and inputs at both ends, a system reserve of 3 dB, and typical fiber attenuation)

2.6.4 Ethernet Communication Interface

100 Base-TX Interface (in accordance with IEEE 802.3 and IEC 61850)

Optical Fiber (-X13, -X14)

- Industry Standard Small Form Pluggable (SFP) package, LC duplex connector optical interface
- Glass fiber connection G 50/125:
  - Optical central wavelength: typ. 1308 nm
  - Optical output: min. −23.5 dBm
  - Loss of signal - de-asserted: max. −32 dBm
  - Loss of signal - asserted: min. −45 dBm
  - Optical input: max. −14 dBm
- Glass fiber connection G 62.5/125:
  - Optical central wavelength: typ. 1308 nm
  - Optical output: min. −20 dBm
  - Loss of signal - de-asserted: max. −32 dBm
  - Loss of signal - asserted: min. −45 dBm
  - Optical input: max. −14 dBm

Wire Leads (-X15)

- RJ45, 1.5 kV isolation
- Transmission rate: 100 Mbit/s
- Distance to be bridged: max. 100 m

2.6.5 IRIG-B Interface

- Modulated signal (B122 format)
- Demodulated signal (B000 format)
- Carrier frequency: 1 kHz
- BCD- coded variable data (daily)
- 2kVrms Dielectric withstand

2.7 Information Output

Counters, measured data, and indications: see chapter “Information and Control Functions”.

2.8 Settings – Typical Characteristic Data

2.8.1 Main Function

- Minimum output pulse for trip command: 0.1 to 10 s (adjustable)
- Minimum output pulse for close command: 0.1 to 10 s (adjustable)

2.8.2 Differential Protection

- Operate time including output relay:
  - ≤ 16 ms without inrush stabilization or operation of $I_{diff>>}$, $I_{diff>>>}$
  - ≤ 32 ms with inrush stabilization
- Reset time (measured variable from fault infeed to 0): ≤ 30 ms, approx. 25 ms

2.8.3 Definite-Time and Inverse-Time Overcurrent Protection

- Operate time including output relay (measured variable from 0 to 2-fold operate value): ≤ 40 ms, approx. 30 ms
- Reset time (measured variable from 2-fold operate value to 0): ≤ 40 ms, approx. 30 ms
- Starting resetting ratio: approx. 0.95

2.8.4 Time-Voltage Protection

- Operate time including output relay (measured variable from nominal value to 1.2-fold operate value or measured variable from nominal value to 0.8-fold operate value):
  - ≤ 40 ms, approx. 30 ms
- Reset time (measured variable from 1.2-fold operate value to nominal value or measured variable from 0.8-fold operate value to nominal value):
  - ≤ 45 ms, approx. 30 ms
- Resetting ratio for V<>:
  - 1% to 10% (adjustable)

2.8.5 Overfluxing Protection

Starting resetting ratio: approx. 0.95

2.9 Deviations

2.9.1 Deviations of the Operate Values

2.9.1.1 Definitions

Reference Conditions

- Quasi-stationary sinusoidal signals at nominal frequency f_{nom} (frequency protection excepted), total harmonic distortion ≤ 2 %, ambient temperature 20°C (68°F), and nominal auxiliary voltage $V_{A,nom}$.

Deviation

- Deviation relative to the setting under reference conditions.

2.9.1.2 Differential Protection

Measuring system with default value 1 for the amplitude matching factors (DIFF: Matching fact. kam,x = 1, x=a, b, c):

- at $I_{diff} < 0.2 \cdot I_{ref}$: ± 10%
- at $I_{diff} >= 0.2 \cdot I_{ref}$: ± 5%

Inrush Stabilization (2nd harmonic)

- Deviation: ± 10%

Overflux Blocking (5th harmonic)

- Deviation: +0/–20%

2.9.1.3 Restricted Earth-Fault Protection

Measuring system with default value for the amplitude matching factors = 1:

- at $I_d = 0.2 \cdot I_{ref}$: ± 5%

2.9.1.4 Overcurrent-Time Protection

Operate values

- Deviation: ± 5%

2.9.1.5 Thermal Overload Protection

Operate value Θ

- Deviation: ± 5% of the setting or ± 1% of the nominal value

2.9.1.6 Time-Voltage Protection

Operate values

- V<>: ± 1% (in the range 0.6 to 1.4 Vnom)

2.9.1.7 Frequency Protection

Operate values f<>

- ± 5 mHz

Operate values df/dt

- ± 100 mHz/s

2.9.1.8 Overexcitation Protection

- Operate values: ± 3%

2.9.1.9 Circuit Breaker Failure Protection

Operate value I<

- Hysteresis: 6.25% of the setting plus 4.8% of the nominal value
- Deviation: ± 5% of the setting or ± 2% of the nominal value

2.9.1.10 Direct Current Input

- Deviation: ± 1 %

2.9.1.11 Resistance Thermometer

- Deviation: ± 2°C (in the range −40°C ... 120°C)

2.9.1.12 Analog Measured Data Output

- Deviation: ± 1 %
- Output residual ripple with max. load: ± 1 %

2.9.2 Deviations of the Timer Stages

2.9.2.1 Definitions

Reference conditions

- Sinusoidal signals at nominal frequency f_{nom}, total harmonic distortion ≤ 2 %, ambient temperature 20°C (68°F), and nominal auxiliary voltage $V_{A,nom}$.

Deviation

- Deviation relative to the setting under reference conditions.

2.9.2.2 Definite-time stages

- Deviation: ± 1% + 20 ms to 40 ms

2.9.2.3 Inverse-time stages

- Deviation when $I \geq 2\ I_{ref}$: ± 5% + 10 to 25 ms
- For “extremely inverse” IEC characteristics and for thermal overload characteristics: ± 7.5% + 10 to 20 ms

2.9.3 Deviations of Measured Data Acquisition

2.9.3.1 Definitions

Reference conditions

- Sinusoidal signals at nominal frequency fnom, total harmonic distortion ≤ 2%, ambient temperature 20°C (68°F), and nominal auxiliary voltage $V_{A,nom}$.

Deviation

- Deviation relative to the nominal values under reference conditions.

2.9.3.2 Operating Data Measurement

- Currents (measuring inputs): ± 1%
- Voltages (measuring input): ± 0.5%
- Currents (internally calculated): ± 2%
- Voltages (internally calculated): ± 2%
- Frequency: ± 10 mHz

2.9.3.3 Fault Data

Short-circuit, differential and restraining currents

- Deviation: ± 3%

2.9.3.4 Internal Clock

With free running internal clock

- Deviation: < 1 min/month

With external synchronization (with a synchronization interval ≤ 1 min)

- Deviation: < 10 ms

With synchronization via IRIG-B interface

- ± 1 ms

2.10 Resolution of the Fault Data Acquisition

2.10.1 Time Resolution

- 20 sampled values per period

2.10.2 Currents

Dynamic range

- $33 \cdot I_{nom}$

Amplitude resolution

- at I_{nom} = 1 A: 2.0 mA_{rms}
- at I_{nom} = 5 A: 10.1 mA_{rms}

2.10.3 Voltage

- Dynamic range: 150 V
- Amplitude resolution: 9.2 mV_{rms}

2.11 Recording Functions

2.11.1 Organization of the Recording Memories

Operating Data Memory

Scope for signals

- All signals relating to normal operation; from a total of up to 2048 different logic state signals.

Depth for signals

- The 1000 most recent signals.

Monitoring Signal Memory

Scope for signals

- All self-monitoring logic state signals.

Depth for signals

- Up to 30 signals.

Overload Memory

Number

- The 8 most recent overload events

Scope for signals

- All signals relevant for an overload event from a total of up to 2048 different logic state signals.

Depth for signals

- 200 entries per overload event.

Ground Fault Memory

Number

- The 8 most recent ground fault events

Scope for signals

- All signals relevant for a ground fault event from a total of up to 2048 different logic state signals.

Depth for signals

- 200 entries per ground fault event.

Fault Memory

Number

- The 8 most recent faults.

Scope for signals and fault values

- All fault-relevant signals from a total of up to 2048 different logic state signals.
- Sampled values for all measured currents and voltages

Depth for signals and fault values

- 200 entries per fault event
- max. number of cycles per fault can be set by user;

  820 periods in total for all faults, that is 16.4 s (for fnom = 50 Hz) or 13.7 s (for fnom = 60 Hz).

Resolution of the Recorded Data

- As per Section 2.10, (p. 2-20).

2.12 Power Supply

Nominal auxiliary voltage $V_{A,nom}$

- 24 to 60 V DC or 60 to 250 V DC and 100 to 230 V AC (ordering option).

Operating range for direct voltage

- 0.8 to 1.1 $V_{A,nom}$ with a residual ripple of up to 15 % $V_{A,nom}$.

Operating range for alternating voltage

- 0.9 to 1.1 $V_{A,nom}$.

Nominal burden

- … where V_A = 220 V DC and with maximum module configuration
  - 40 TE case, relays de-energized/energized: approx. 12.6 W / 34.1 W
  - 84 TE case, relays de-energized/energized): approx. 14.5 W / 42.3 W

Start-up peak current

- < 3 A for duration of 0.25 ms

Stored energy time

- ≥ 50 ms for interruption of V_A ≥ 220 V DC (upper range supply)
- ≥ 50 ms for interruption of V_A ≥ 60 V DC (lower range supply)

2.13 Current Transformer Specifications

2.13.1 Symbols

The following symbols are used in accordance with IEC 61869 standards:

I_{pn} Rated primary current (nominal primary current) of the CT

I_{sn} Rated secondary current (nominal secondary current) of the CT

I_{psc} Rated primary (symmetrical) short-circuit current

K_{ssc} Rated symmetrical short-circuit current factor:

$$K_{ssc} = \frac{I_{psc}}{I_{pn}}$$

I_{ref} Reference current of IDMT protection element

R_{bn} Rated resistive burden (secondary connected) of the CT

P_{bn} Equivalent power over the rated resistive burden of the CT for rated secondary current:

$$P_{bn} = R_{bn} \cdot I_{sn}^2$$

R_b Actual resistive burden (secondary connected) of the CT

P_b Equivalent power over the actual resistive burden of the CT for rated secondary current:

$$P_b = R_b \cdot I_{sn}^2$$

R_{ct} Secondary winding resistance of the CT

P_{ct} Equivalent power over the secondary winding resistance of the CT for secondary rated current:

$$P_{ct} = R_{ct} \cdot I_{sn}^2$$

V_{sal} Secondary accuracy limiting voltage (e.m.f.) of the CT

V_k Rated knee point voltage (e.m.f.) of the CT

n_n Rated accuracy limit factor of the CT

n_b Actual accuracy limit factor of the CT:

$$n_b = n_n \cdot \frac{R_{ct} + R_{bn}}{R_{ct} + R_b} = n_n \cdot \frac{P_{ct} + P_{bn}}{P_{ct} + P_b}$$

R_l One-way lead resistance from CT to relay

R_{rel} Resistive burden of relay's CT input

T_p Primary time constant (primary system time constant)

ω (System) angular frequency

X_p/R_p Primary impedance ratio (system impedance ratio):

$$\frac{X_p}{R_p} = \omega \cdot T_p$$

K_d Dimensioning factor for the CT

K_{emp} Relay specific, empirically determined dimensioning factor for the CT

2.13.2 General Equations

The current transformer can be dimensioned

- either for the minimum required secondary accuracy limiting voltage acc. to IEC 61869, 3.4.209:
  $V_{sal} \geq K_d \cdot K_{ssc} \cdot I_{sn} \cdot (R_{ct} + R_b)$
- or for the minimum required rated accuracy limit factor acc. to IEC 61869, 3.4.208, as follows:
  $$n_n \geq K_d \cdot K_{ssc} \cdot \frac{R_{ct} + R_b}{R_{ct} + R_{bn}} = K_d \cdot K_{ssc} \cdot \frac{P_{ct} + P_b}{P_{ct} + P_{bn}}$$

The relation between both methods is given as follows:

$$V_{sal} = n_n \cdot (\frac{P_{bn}}{I_{sn}} + I_{sn} \cdot R_{ct})$$

The actual secondary connected burden R_b is given as follows:

- For phase-to-ground faults: $R_b = 2 \cdot R_l + R_{rel}$
- For phase-to-phase faults: $R_b = R_l + R_{rel}$

The wire lead burden is calculated as:

$$R_l = \rho \cdot \frac{l}{A}$$

- ρ = specific conductor resistance
  (e.g. for copper 0.021 Ω mm²/m = $2.1 \cdot 10^{-8}$ Ω m, at 75°C)
- l = wire length
- A = wire cross section

For devices out of the platform Easergy MiCOM 30, the input CT burden R_{rel} is less than 20 mΩ, independent of the set nominal current (1 A or 5 A). Usually this relay burden can be neglected.

The rated knee point voltage V_k according to IEC 61869, 3.4.217 is lower than the secondary accuracy limiting voltage V_{sal} according to IEC 61869, 3.4.209. It is not possible to give a general relation between V_k and V_{sal}, but for standard core material the following relations applies:

- $V_K \approx 0.85 \cdot V_{sal}$ for class 5P CTs, and
- $V_K \approx 0.75 \cdot V_{sal}$ for class 10P CTs, respectively.

Theoretically, the specifications of the current transformer could be calculated to avoid saturation by inserting its maximum value, instead of the required over-dimensioning factor K_d:

$$K_d = K_{max} \approx 1 + \frac{X_p}{R_p} = 1 + \omega \cdot T_p$$

However, this is not necessary. Instead, it is sufficient to consider an empirically determined dimensioning factor K_d=K_{emp} such that the appropriate operation of the protection function is ensured under the given conditions. This factor depends on application and relay type, as outlined in the following.

2.13.3 Transformer Differential Protection

For Transformer Differential Protection Devices the empirical dimensioning factor K_d = K_{emp} for the CTs considering **external faults** (assuming maximum through-flowing currents) can be taken from the following diagram:

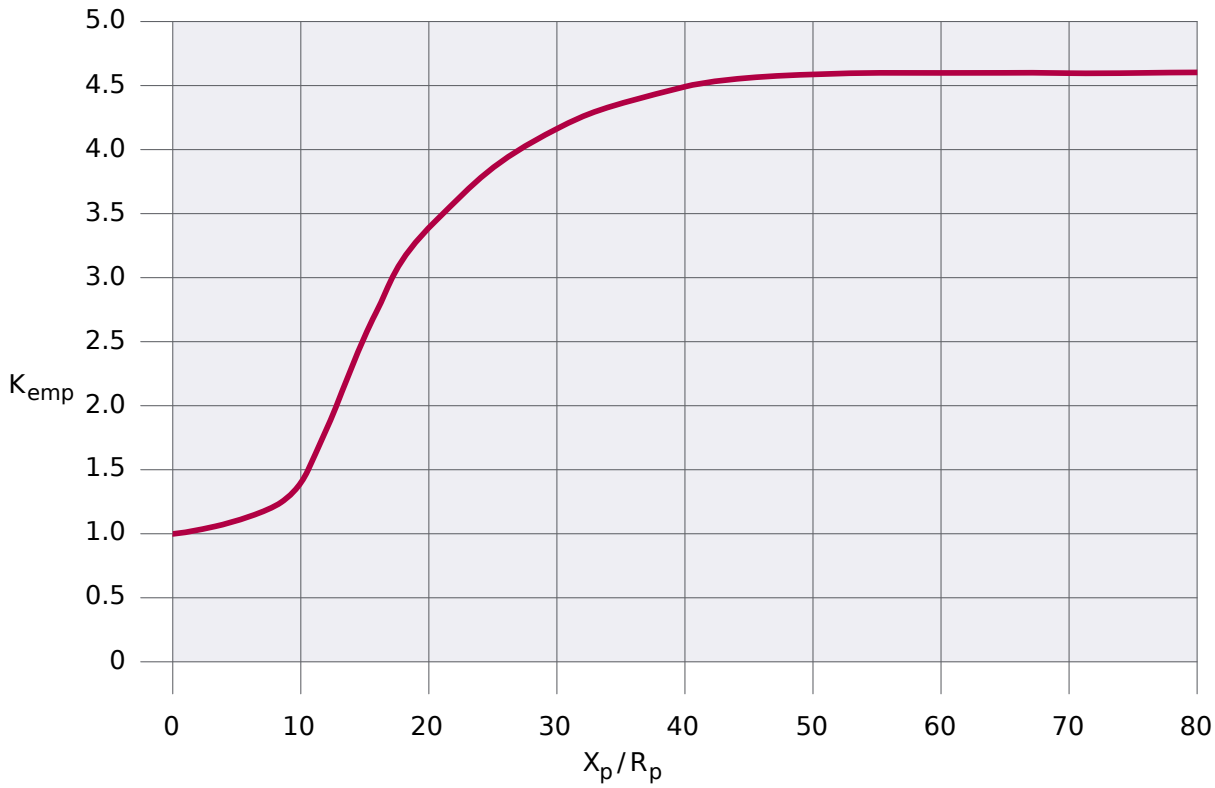

This CT dimensioning assures through fault stability of the differential element. Due to the inbuilt saturation discriminator the CT requirement is independent of the current sensitivity given by the set basic threshold of the tripping characteristic.

The empirical dimensioning factor K_{emp} (shown in the diagram above) has been determined by investigations using 3-shot auto-reclosing sequences with 450 ms of fault current feed (starting at worst case point on wave) for each shot and 300 ms dead time between shots. In most practical cases faults would be cleared in 100 to 200 ms for external protection operation and the dead time between auto-reclose shots would be longer than 300 ms. This would reduce the flux build-up in the core. Therefore the above shown empirical dimensioning factor K_{emp} can be considered as being based on a conservative approach.

For internal fault steady-state saturation is permissible with maximum fault currents up to 4 times the steady-state accuracy limit current of the CT. This corresponds to a dimensioning factor of K_d = 0.25 for internal faults.

It is recommended to use CTs of accuracy class 5P (or equivalent).

3 Operation

3.1 Modular Structure

The P633 is a numerical device out of Schneider Electric's family of devices named “Easergy MiCOM 30”. The device types included in this family are built from identical uniform hardware modules. The figure below shows the basic hardware structure of the P633.

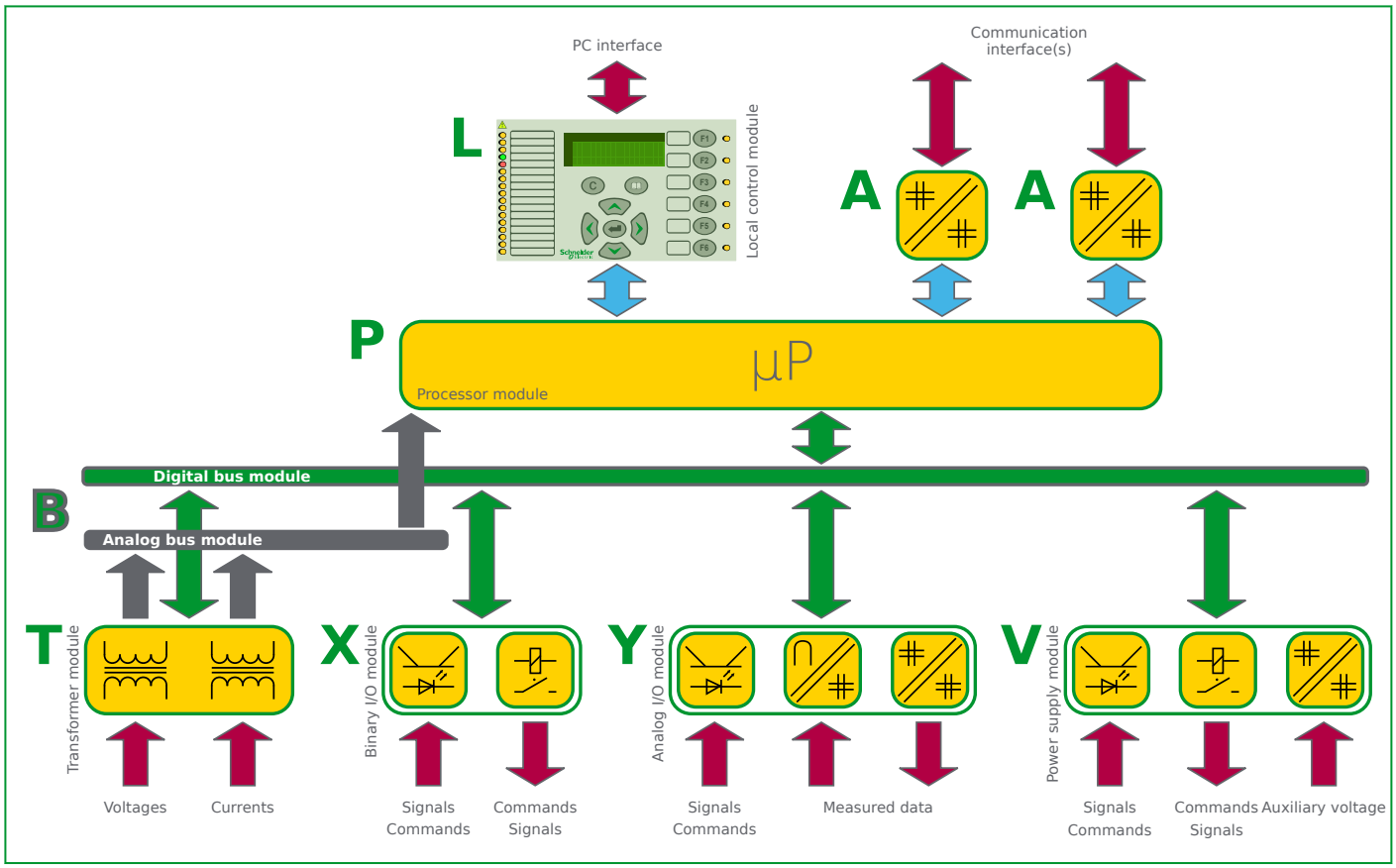

Fig. 3-1: Basic hardware structure.

External analog quantities and binary quantities – electrically isolated – are converted to the internal processing levels by the peripheral modules T, Y, and X.

The optional binary I/O modules X are equipped with optical couplers for binary signal input as well as output relays for the output of signals and commands or combinations of these.

The external auxiliary voltage is applied to the power supply module V, which supplies the auxiliary voltages that are required internally.

Analog data is transferred from the transformer module T via the analog bus module B to the processor module P. The processor module contains all the elements necessary for the conversion of measured analog variables, including multiplexers and analog/digital converters. The analog data conditioned by the analog I/O module Y is transferred to the processor module P via the digital bus module.

The processor handles the processing of digitized analog variables and of binary signals, generates the protective trip and signals, and transfers them to the binary I/O modules X via the digital bus module. The processor module also handles overall device communication.

The optional communication modules provide one or two serial communication interfaces for the integration of the protection and control unit into a substation control system.

The local control module L is located behind the front panel and connected to the processor module via a ribbon cable. It encompasses all control and display elements as well as a PC interface for running the operating program Easergy Studio.

3.2 Operator-Machine Communication

The following interfaces are available for the exchange of information between the user and the P633:

- Integrated user interface (LOC: local control panel)
- PC interface
- Communication interface

All settings and signals as well as all measurements and control functions are arranged within the branches of the menu tree following a scheme that is uniform throughout the device family. The main branches are:

“Parameters” Branch

All settings are contained in this branch. This branch carries all settings, including the identification data of the P633, the configuration parameters for adapting the P633 interfaces to the system, and the function parameters for adapting the device functions to the process. All values in this group are stored in non-volatile memory, which means that the values will be preserved even if the power supply fails.

“Operation” Branch

This branch includes all information relevant for operation such as measured operating data and binary signal states. This information is updated periodically and consequently is not stored. In addition, various controls are grouped here, for example those for resetting counters, memories and displays.

“Events” Branch

The third branch is reserved for the recording of events. All information in this group is therefore stored. In particular, the start/end signals during a fault, the measured fault data, and the sampled fault waveforms are stored here and can be read out when required.

Display of Settings and Signals

Settings and signals are displayed either in plain text or as addresses, in accordance with the user’s choice. All settings and signals of the P633 are documented in a separate collection of documents, the so-called “DataModelExplorer”. The “Addresses” document (being part of the “DataModelExplorer”) is complete in the sense that it contains all settings, signals and measured variables that are relevant for the user of the P633.

The configuration of the local control panel also permits the installation of Measured Value “Panels” on the LCD display. Different Panels are automatically displayed for specific system operating conditions. Priority increases from normal operation to operation under overload conditions and finally to operation following a short circuit in the system. Thus the P633 provides the measured data relevant for the prevailing conditions.

3.3 Cyber Security (Function Group CS)

This product contains a Cyber Security function, which manages the encryption of the data exchanged through some of the communication channels. The aim is to protect the data (configuration and process data) from any corruption, malice, attack. Subsequently, this product might be subject to control from customs authorities, and it might be necessary to request special authorization from these customs authorities before any export/import operation. For any technical question relating to the characteristics of this encryption please contact your Customer Care Centre - http://www.schneider-electric.com/CCC.

For devices of the Easergy MiCOM 30 platform, Cyber Security is available as of software version -660.
Please refer to separately available "Cyber Security" Technical Manual for all details.

Cyber Security is based on the model of Role Based Access Control (RBAC) which is a method to restrict resource access to authorized users. One role can have one and more access rights, one user (subject) can have several roles. A user (subject) is based on a session. This session controls for example the activity of the user. If the user is inactive for 15 minutes (default setting) the user will be locked out automatically.

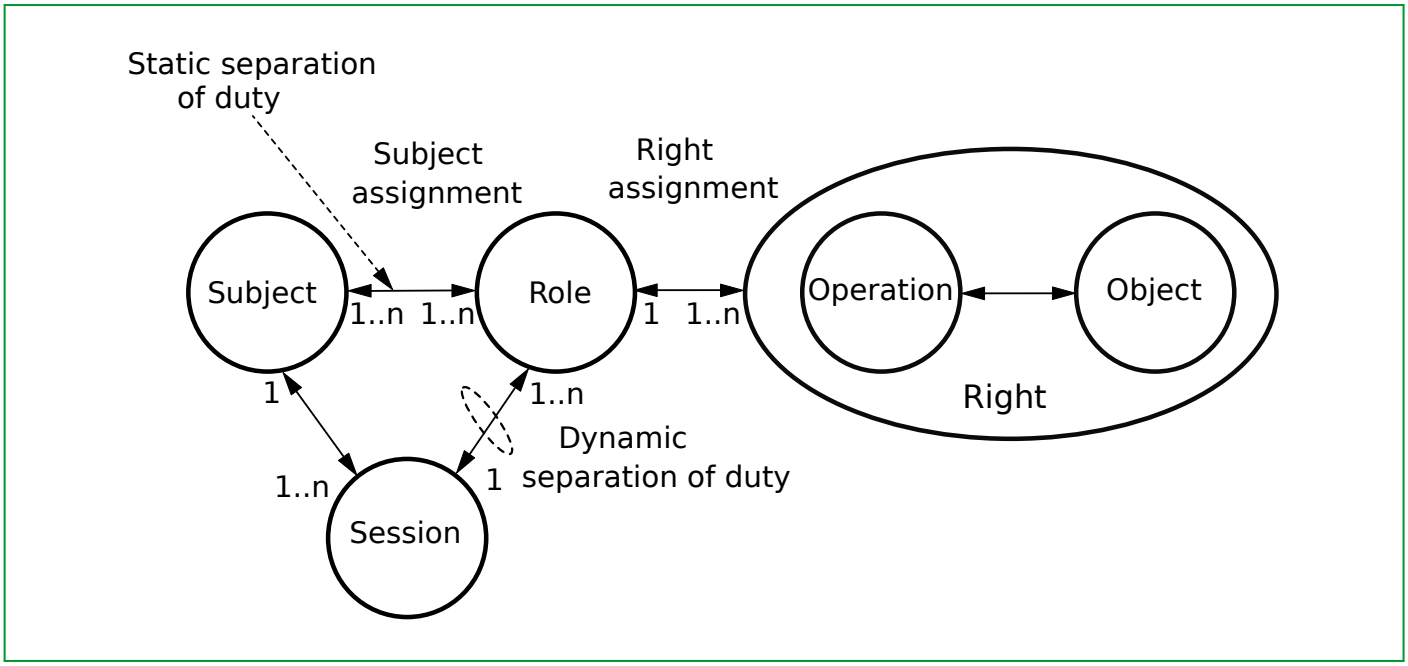

Fig. 3-2: RBAC model.

3.3.1 Users, Roles and Rights for Easergy MiCOM P30

User accounts

When the user tries to access an IED, they need to login using their own username and their own password. The username/ password combination is then checked against the records stored on the IED. It is the role that defines their access to the relevant parts of the system.

The default user accounts for Easergy MiCOM P30 is as below:

User Accounts	Roles			
	ENGINEER	OPERATOR	VIEWER	SECADM
EngineerLevel	x	x	x	
OperatorLevel		x	x	
ViewerLevel			x	
SecurityAdmin				x
DefaultUser			x	

Tab. 3-1: Default user accounts for Easergy MiCOM P30.

Roles

Different named roles are associated with different access rights. Roles and Rights are setup in a pre-defined arrangement, according to the IEC 62351 standard, but customized to the Easergy MiCOM P30 equipment.

The default roles for Easergy MiCOM P30 is as below:

Role	Description
VIEWER	Can View what objects are present within a Logical-Device by presenting the type ID of those objects.
OPERATOR	An Operator can view what objects and values are present within a Logical-Device by presenting the type ID of those objects as well as perform control actions.
ENGINEER	An Engineer can view what objects and values are present within a Logical-Device by presenting the type ID of those objects. Moreover, an engineer has full access to Datasets and Files and can configure the server locally or remotely.
SECADM	Security Administrator can change subject-to-role assignments (outside the device) and role-to-right assignment (inside the device) and security policy setting; change security setting such as certificates for subject authentication and access token verification.

Tab. 3-2: Default roles summary for Easergy MiCOM P30.

Rights

In a similar way in which a set of pre-defined Roles have been created, a predefined set of Rights have been created.

The reason why these are described as Default, is that it is possible to change the definitions of Roles and Rights, by using the SAT software. Depending on the work done by the system administrator, it is possible that your own situation may vary from these initial recommendations.

3.3.2 Cyber Security Implementation

The P633 Transformer Differential Protection Device can be ordered with or without Cyber Security compatibility. (See Chapter 15, (p. 15-1) for the exact order information.)

With Cyber Security Compatibility

For Easergy MiCOM 30 Series support CS, which means the IED supports advanced user account right management. The SAT (EcoStruxure™ Cybersecurity Admin Expert - Security Administration Tool) is required for RBAC configuration.

At the IED level, these Cyber Security features have been implemented:

- Passwords management (via the SAT)
- RBAC Management (via the SAT)
- User Locking
- Inactivity Timer
- RBAC recovery
- Port Disablement (via Easergy Studio or the front panel)
- Simple Network Management Protocol (SNMP)
- Security Logs

Without Cyber Security Compatibility

For Easergy MiCOM 30 Series without CS, no need to use SAT software in order to change and validate the password. If the SAT is connected to device, it has to be blocked in order to avoid password management and modification. Password shall be managed and modified through HMI and Easergy Studio only, as previous password management. No security logs is available.

3.4 Configuration of the Local Control Panel (Function Group LOC)

The configuration of the Local Control Panel includes the configuration of the Bay Panel and of the Measured Value Panels, and the selection of the control point.

On the text display, the Bay Panel will display switching state signals from external devices (closed, open, intermediate position) and the active control site (local or remote).

In addition the P633 offers Measured Value Panels, which display the measured values relevant at a given time.

During normal power system operation; the Bay Panel or – if activated – the Operation Panel is displayed. If the Operation Panel is activated as an event occurs, the display switches to the appropriate Event Panel – provided that measured values have been selected for the Event Panels. In the event of overload or ground fault events, the display will automatically switch to the Operation Panel at the end of the event. In the event of a fault, the Fault Panel remains active until the LED indicators or the fault memories are reset.

If the change enabling command has been issued (LOC: Param. change enabl.) it will be cancelled after the time period, defined by setting LOC: Hold-time for Panels has elapsed and the Bay Panel will be called up.

3.4.1 Bay Panel

Fig. 3-3: Example of a Bay Panel (with text display)

The P633 offers a selection from pre-defined bay types.

The activation of the Bay Panel display is described in Chapter 6, (p. 6-1).

Each external device represented in the Bay Panel is identified by an external device designation (see Section 3.37.3, (p. 3-246)).

The display of external device designations can be disabled (at LOC: Display L/R). The display of the control point (local or remote control) and interlocking can also be disabled (at LOC: Displ. interl. stat.).

The switchgear unit to be controlled needs to be selected first. The selection is cancelled if the return time for illumination (LOC: Return time illumin.) or the return time for selection (LOC: Return time select.) has elapsed.

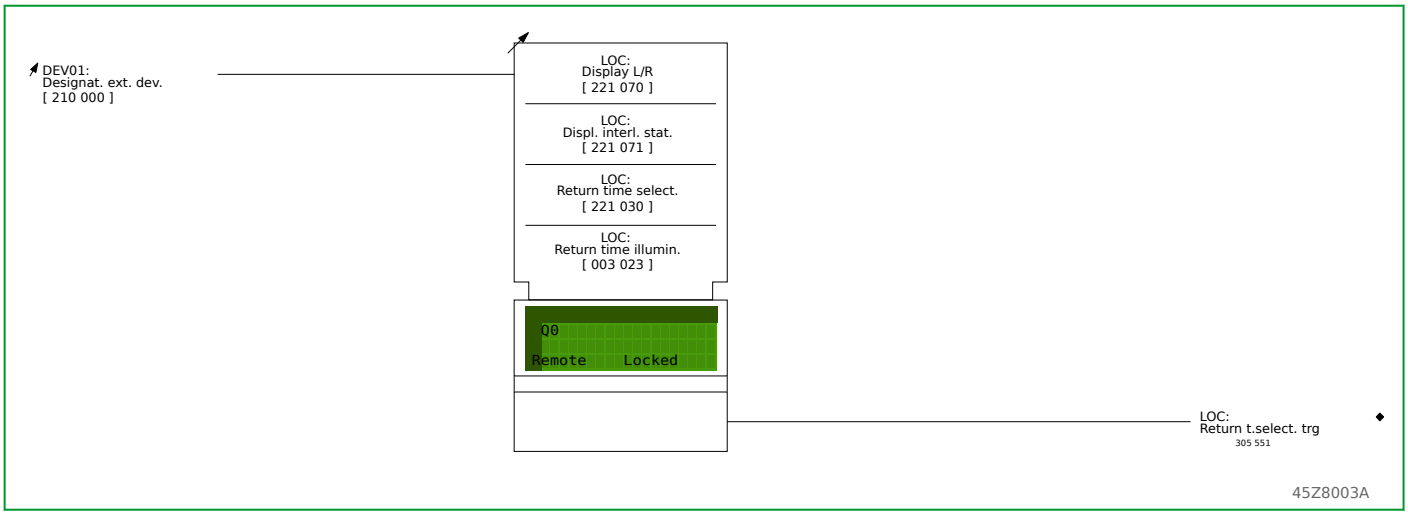

Fig. 3-4: Bay panel (text display)

3.4.2 Operation Panel

The Operation Panel is displayed after the set return time has elapsed, provided that at least one measured value has been configured.

The user can select which of the measured operating values will be displayed on the Operation Panel by means of an “m out of n” parameter. When more measured operating values are selected for display than the LC display can accommodate, then the display will either switch to the next set of measured operating values at intervals defined by the setting for LOC: Hold-time for Panels or when the appropriate key on the local control panel is pressed.

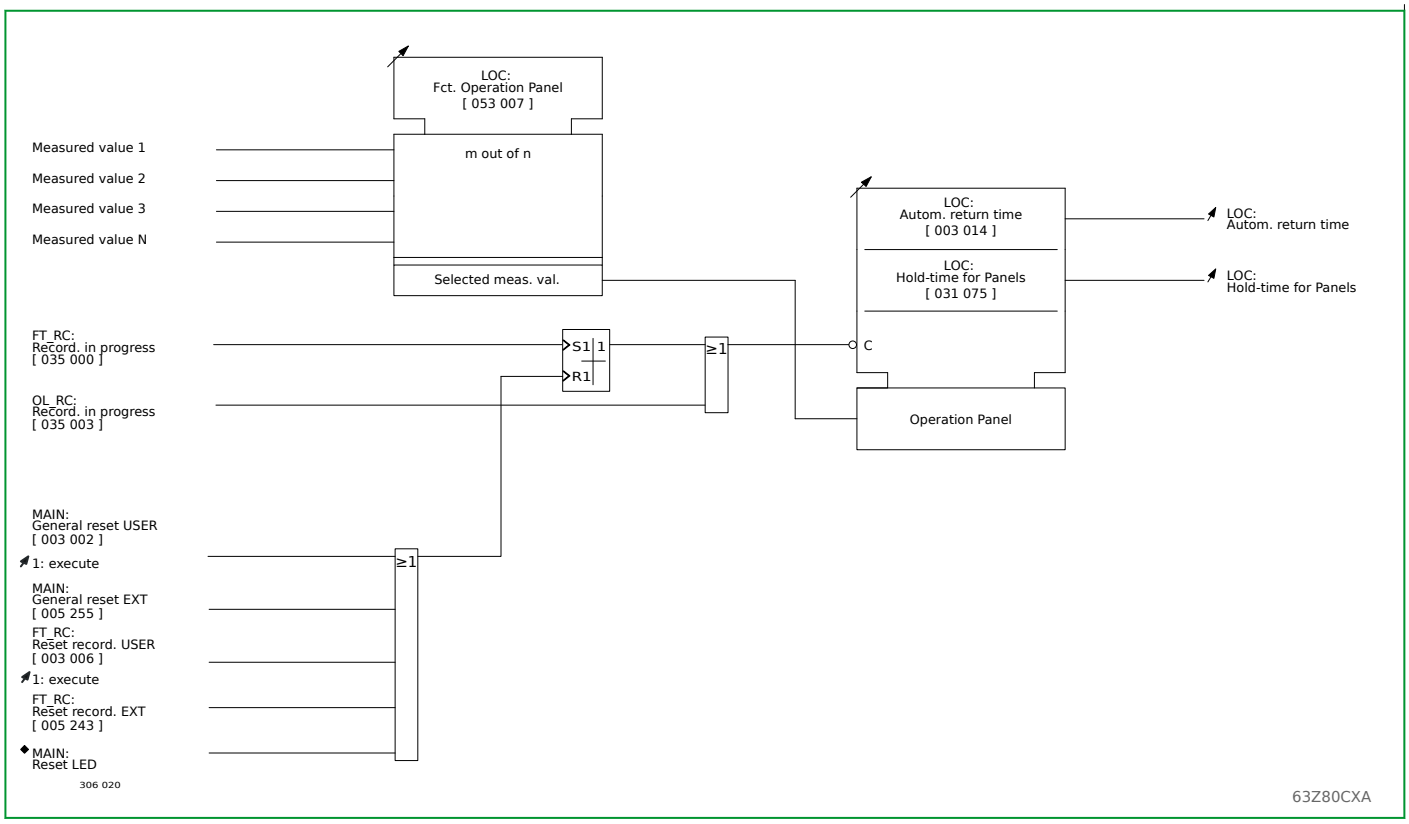

Fig. 3-5: Operation Panel.

3.4.3 Fault Panel

The Fault Panel is displayed in place of another data panel when there is a fault, provided that at least one measured value has been configured. The Fault Panel remains on display until the LED indicators or the fault memories are cleared.

The user can select the measured fault values that will be displayed on the Fault Panel by setting an “m out of n” parameter. When more measured fault values are selected for display than the LC display can accommodate, then the display will either switch to the next set of measured fault values at intervals defined by the setting for LOC: Hold-time for Panels or when the appropriate key on the local control panel is pressed.

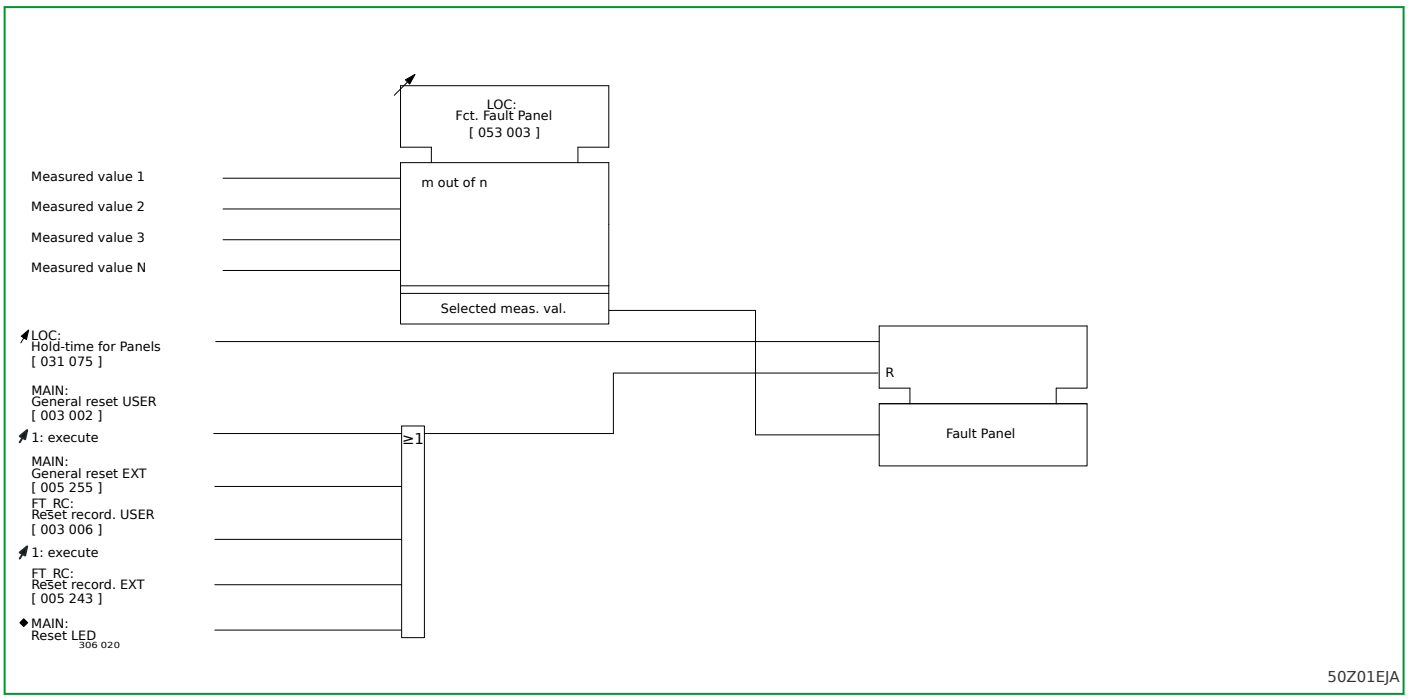

Fig. 3-6: Fault panel.

3.4.4 Overload Panel

The Overload Panel is automatically displayed in place of another data panel when there is an overload, provided that at least one measured value has been configured. The Overload Panel remains on display until the overload ends, unless a fault occurs. In this case the display switches to the Fault Panel.

The user can select the measured values that will be displayed on the Overload Panel by setting a “m out of n” parameter. When more measured fault values are selected for display than the LC display can accommodate, then the display will either switch to the next set of measured fault values at intervals defined by the setting for LOC: Hold-time for Panels or when the appropriate key on the local control panel is pressed.

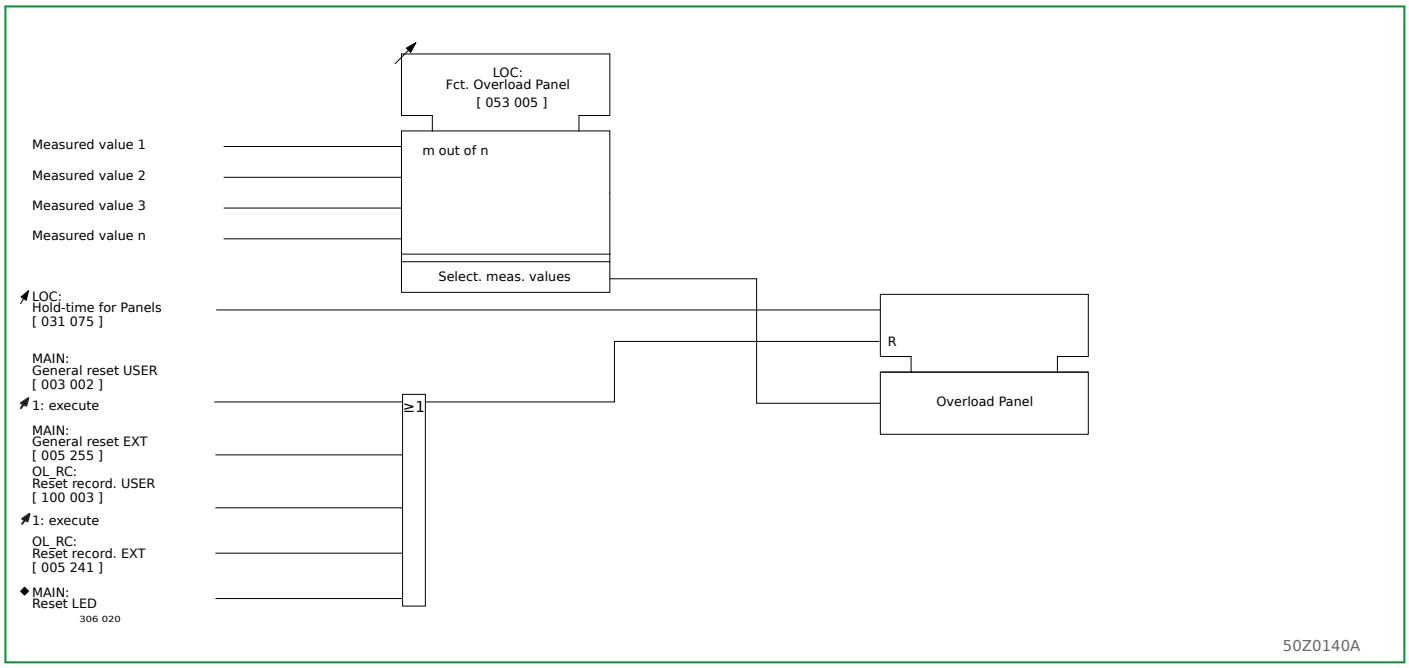

Fig. 3-7: Overload Panel.

3.4.5 Selection of the Control Point

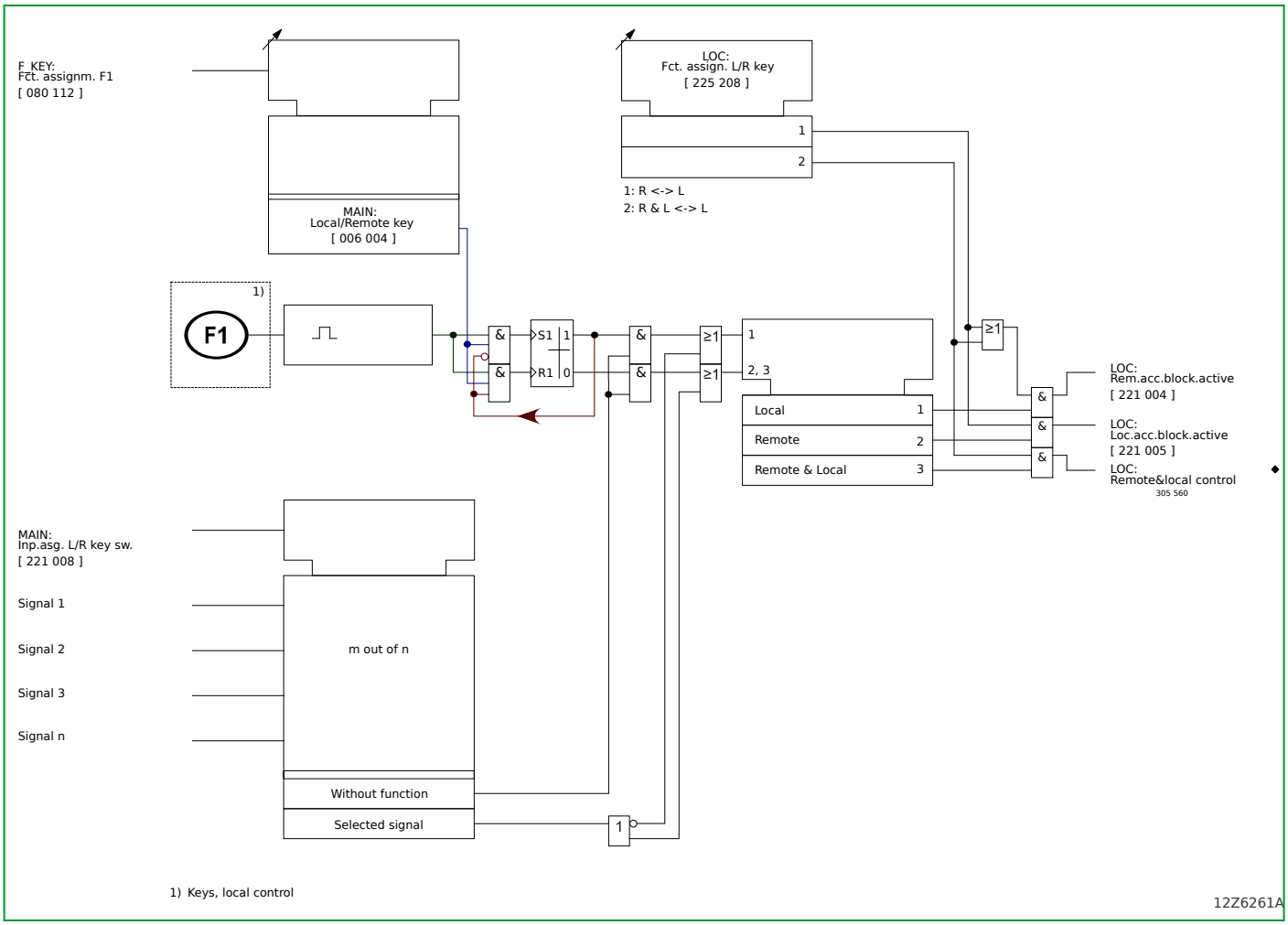

Fig. 3-8: Selection of the control point.

Switchgear units can be controlled from a remote location or locally. Switching between local and remote control is achieved by an appropriately configured function key or an external key switch. The position of this external key switch is checked by an appropriately configured binary signal input (configuration at MAIN: Inp.asg. L/R key sw.).

For more information on the use of a function key as a switch to change over from local and remote control see Section 3.7, (p. 3-52) and Section 6.9.2, (p. 6-13).

The setting LOC: Fct. assign. L/R key determines whether the switching using either the function key or the key switch is between local and remote control (L↔R) or between local+remote and local control (R&L↔L).

If only remote control is enabled then there will be a local access blocking. If only local control is enabled then there will be a remote access blocking.

3.4.6 Configurable Clear Key

The P633 has a Clear key – ⓒ –, to which one or more reset functions can be assigned by selecting the required functions at LOC: Fct. reset key. Details on the functions' resetting features are given in Section 3.13.18, (p. 3-113).

3.5 Communication Interfaces

The P633 has a PC interface as a standard component. Communication module A is optional and can be provided with one or two communication channels – depending on the design version. Communication between the P633 and the control station’s computer is through the communication module A. Setting and interrogation is possible through all the P633's interfaces.

If the communication module A with two communication channels is installed, settings for two communication interfaces will be available. The setting of communication interface 1 (COMM1) may be assigned to the physical communication channels 1 or 2 (see Section 3.13.19, (p. 3-115)). If the COMM1 settings have been assigned to communication channel 2, then the settings of communication interface 2 (COMM2) will automatically be active for communication channel 1.

COMM2 can only be used to transmit data to and from the P633 if its PC interface has been de-activated. As soon as the PC interface is used to transmit data, COMM2 becomes “dead”. It will only be enabled again when the “time-out” period for the PC interface has elapsed.

If tests are run on the P633, the user is advised to activate the test mode. In this way the PC or the control system will recognize all incoming test signals accordingly (see Section 3.13.20, (p. 3-116)).

3.5.1 PC Interface (Function Group PC)

Communication between the P633 and a PC is through the PC interface. In order for data transfer between the P633 and the PC to function, several settings must be made in the P633.

There is support software available as an accessory for P633 control.

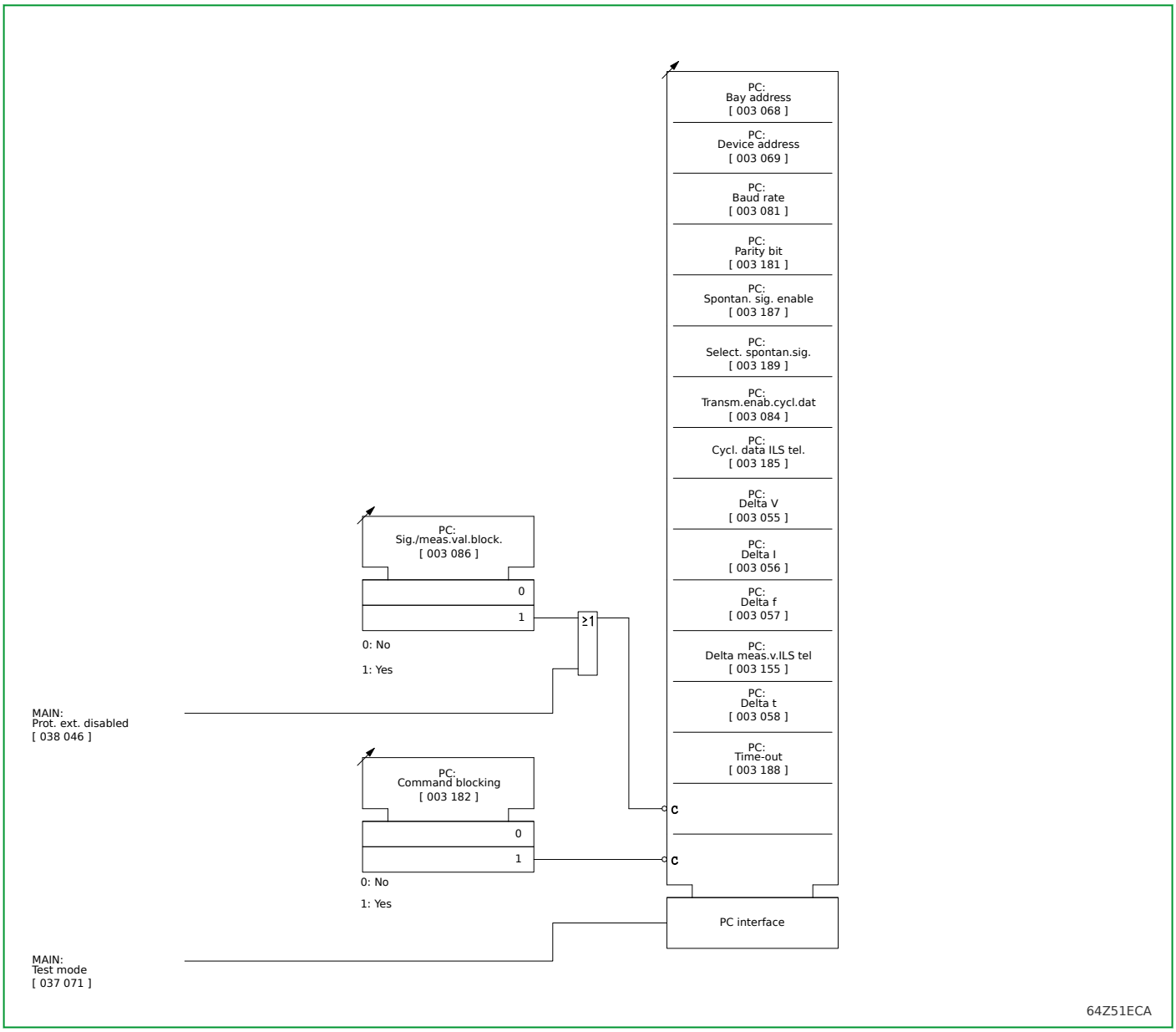

Fig. 3-9: PC interface settings

3.5.2 Communication Interface 1 (Function Group COMM1)

There are several different interface protocols available at the communication interface 1. The following user-selected interface protocols are available for use with the P633:

- IEC 60870-5-103, "Transmission protocols - Companion standard for the informative interface of protection equipment, first edition, 1997-12 (corresponds to VDEW / ZVEI Recommendation, "Protection communication companion standard 1, compatibility level 2", February 1995 edition) with additions covering control and monitoring
- IEC 870-5-101, "Telecontrol equipment and systems - Part 5: Transmission protocols - Section 101 Companion standard for basic telecontrol tasks," first edition 1995-11
- ILS-C, proprietary protocol of Schneider Electric
- MODBUS
- DNP 3.0
- COURIER

In order for data transfer to function properly, several settings must be made in the P633.

Communication interface 1 can be blocked through a binary signal input. In addition, a signal or measured-data block can also be imposed through a binary signal input.

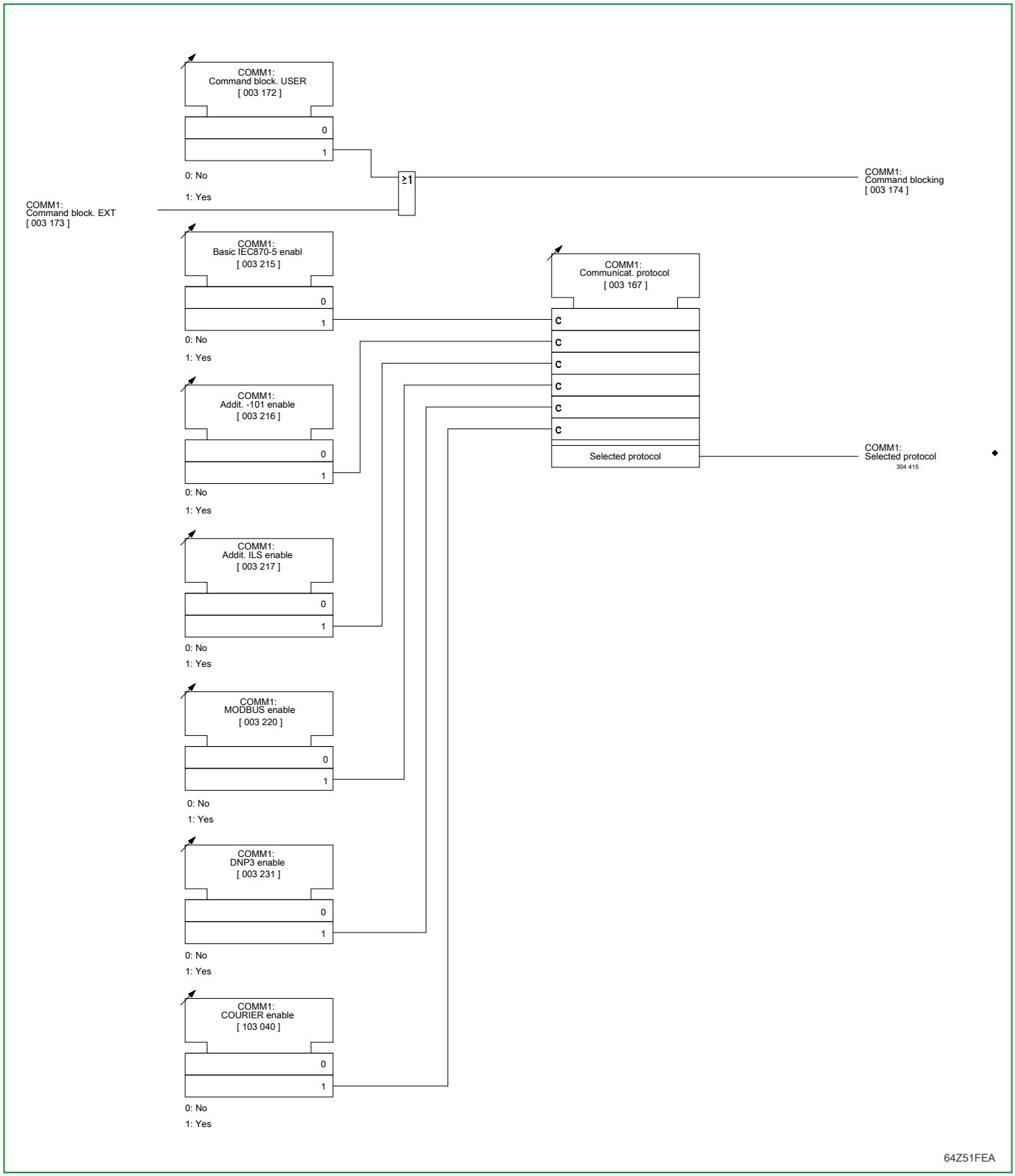

Fig. 3-10: Communication interface 1, selecting the interface protocol.

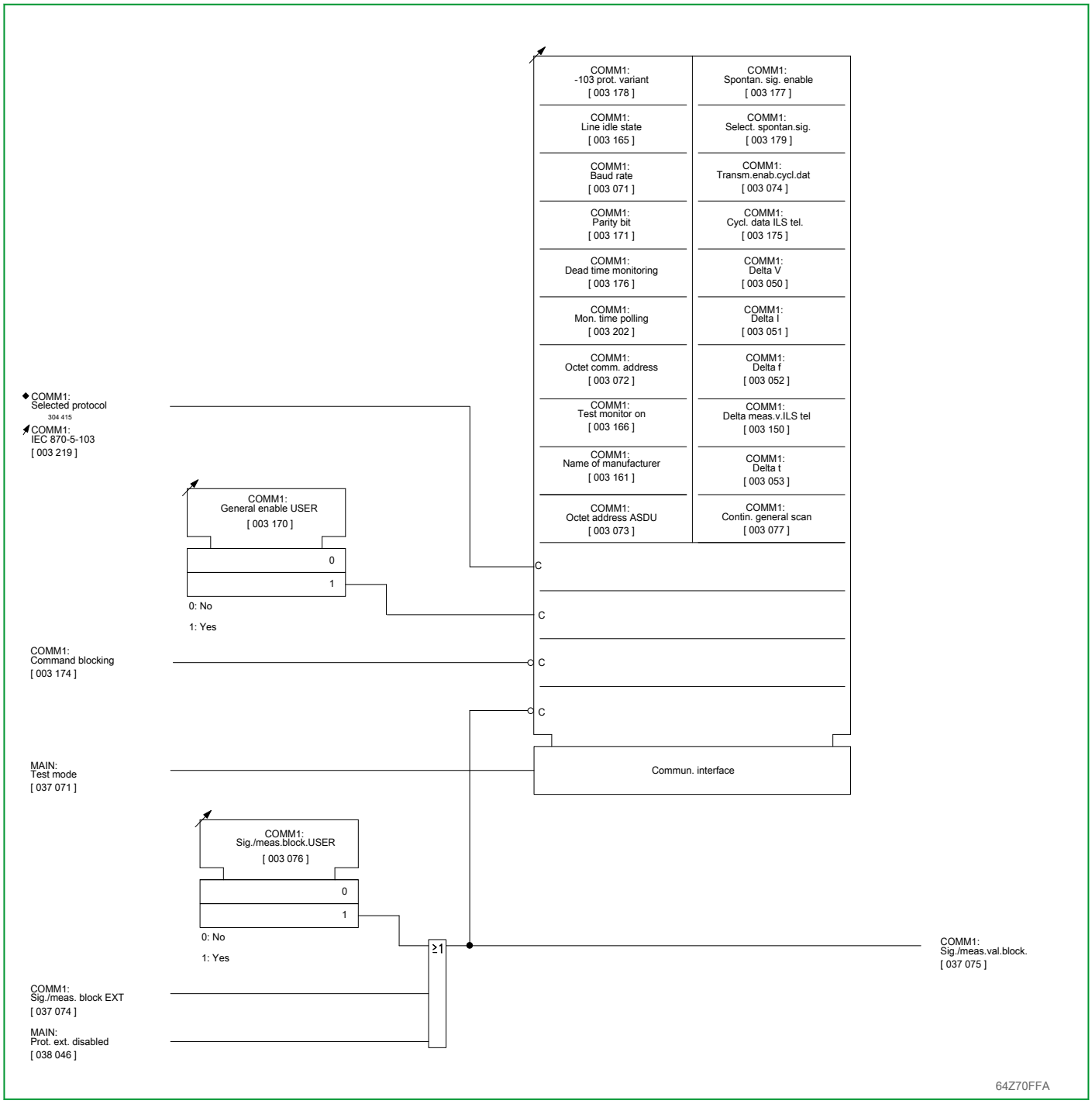

Fig. 3-11: Communication interface 1, settings for the IEC 60870-5-103 interface protocol.

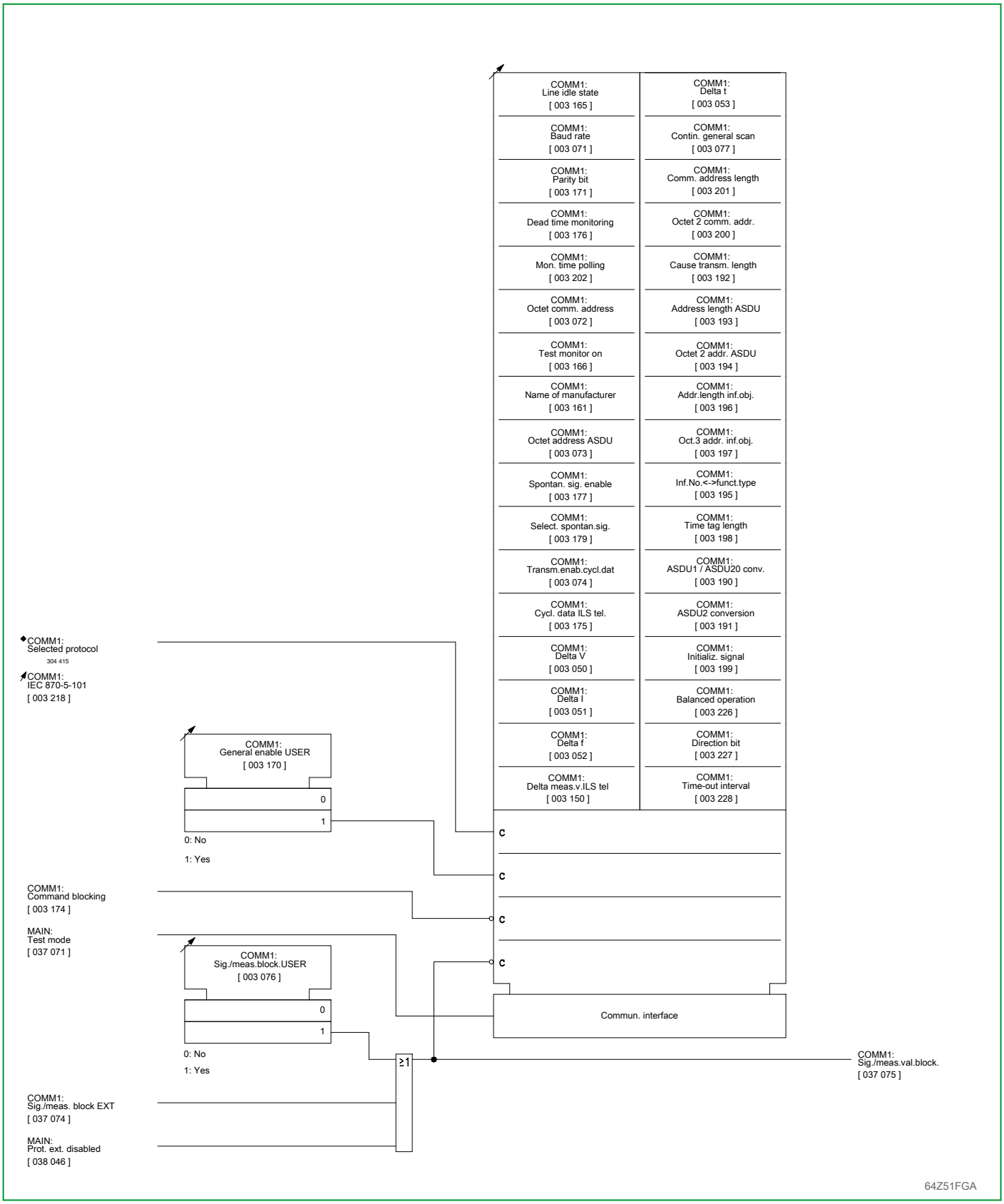

Fig. 3-12: Communication interface 1, settings for the IEC 870-5-101 interface protocol.

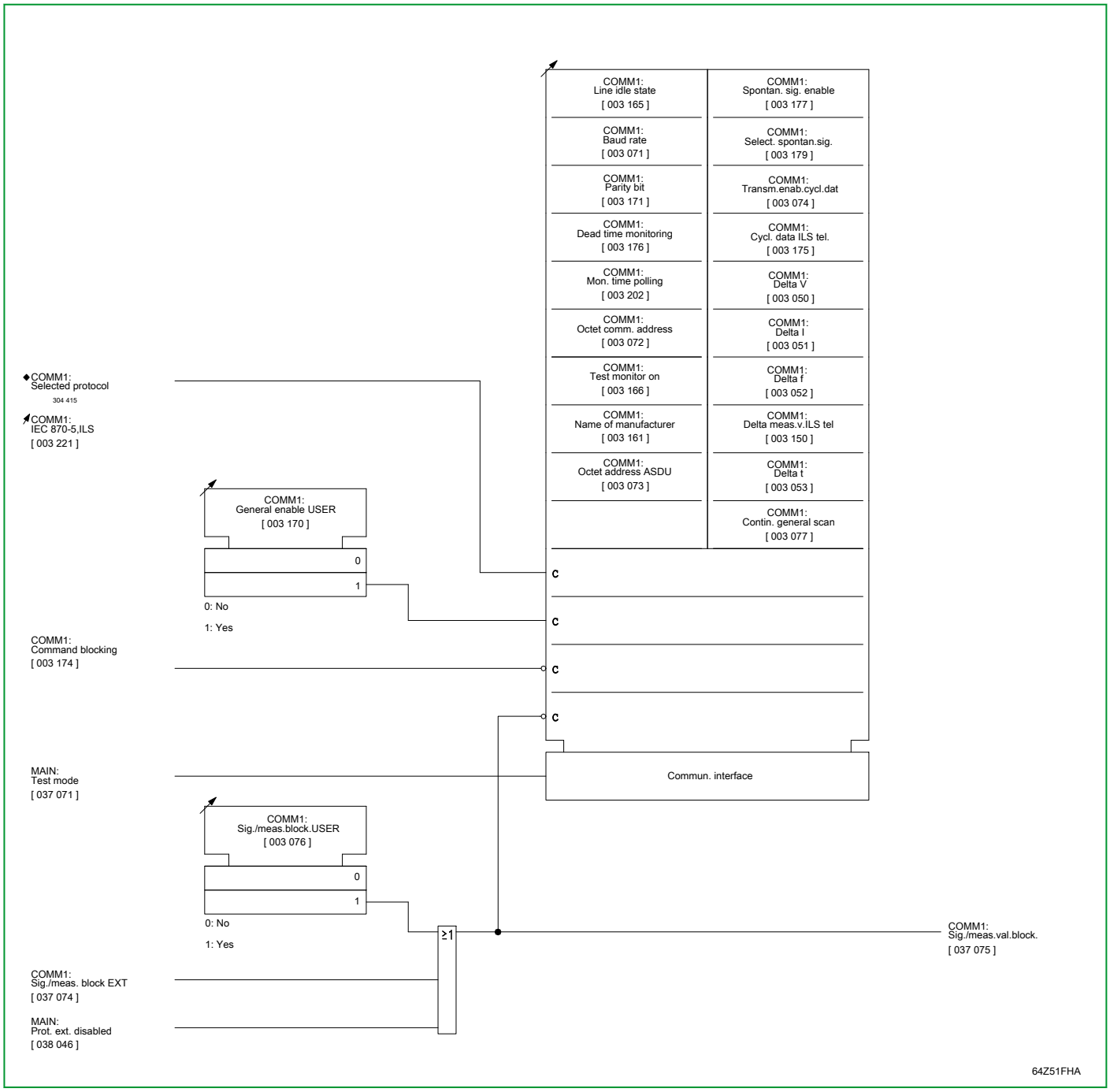

Fig. 3-13: Communication interface 1, settings for the ILS-C interface protocol.

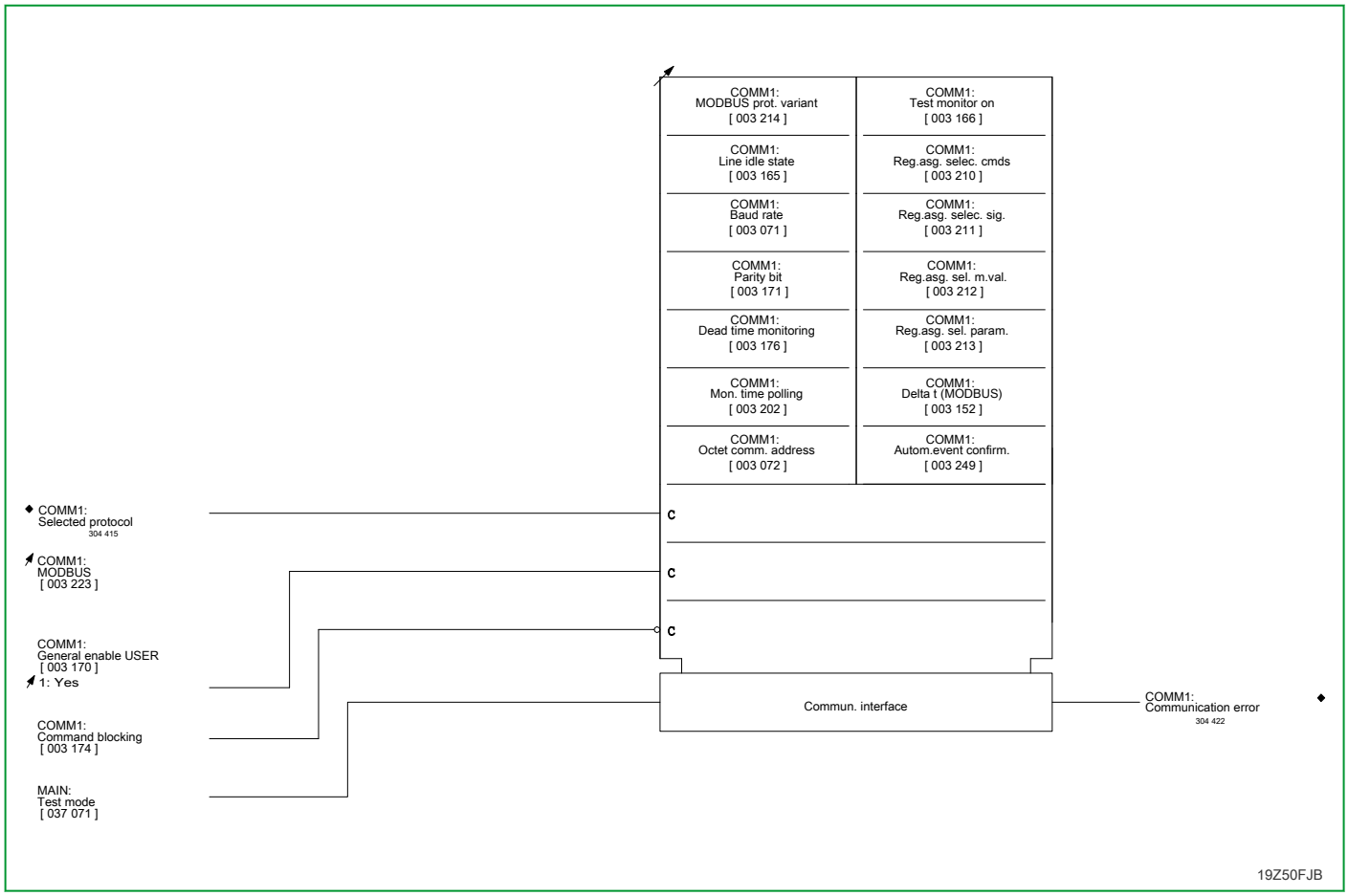

Fig. 3-14: Communication interface 1, settings for the MODBUS protocol.

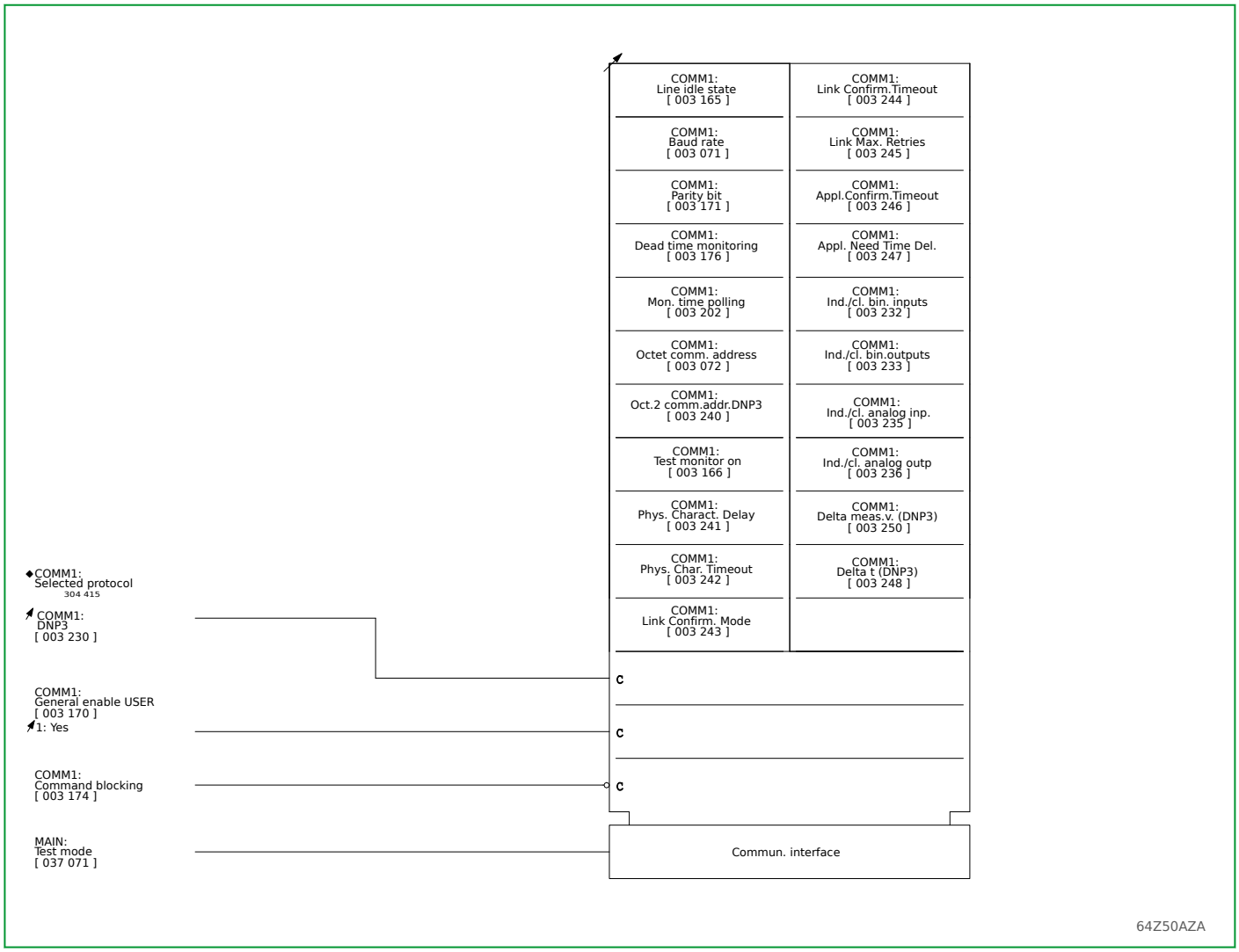

Fig. 3-15: Communication interface 1, settings for the DNP 3.0 protocol.

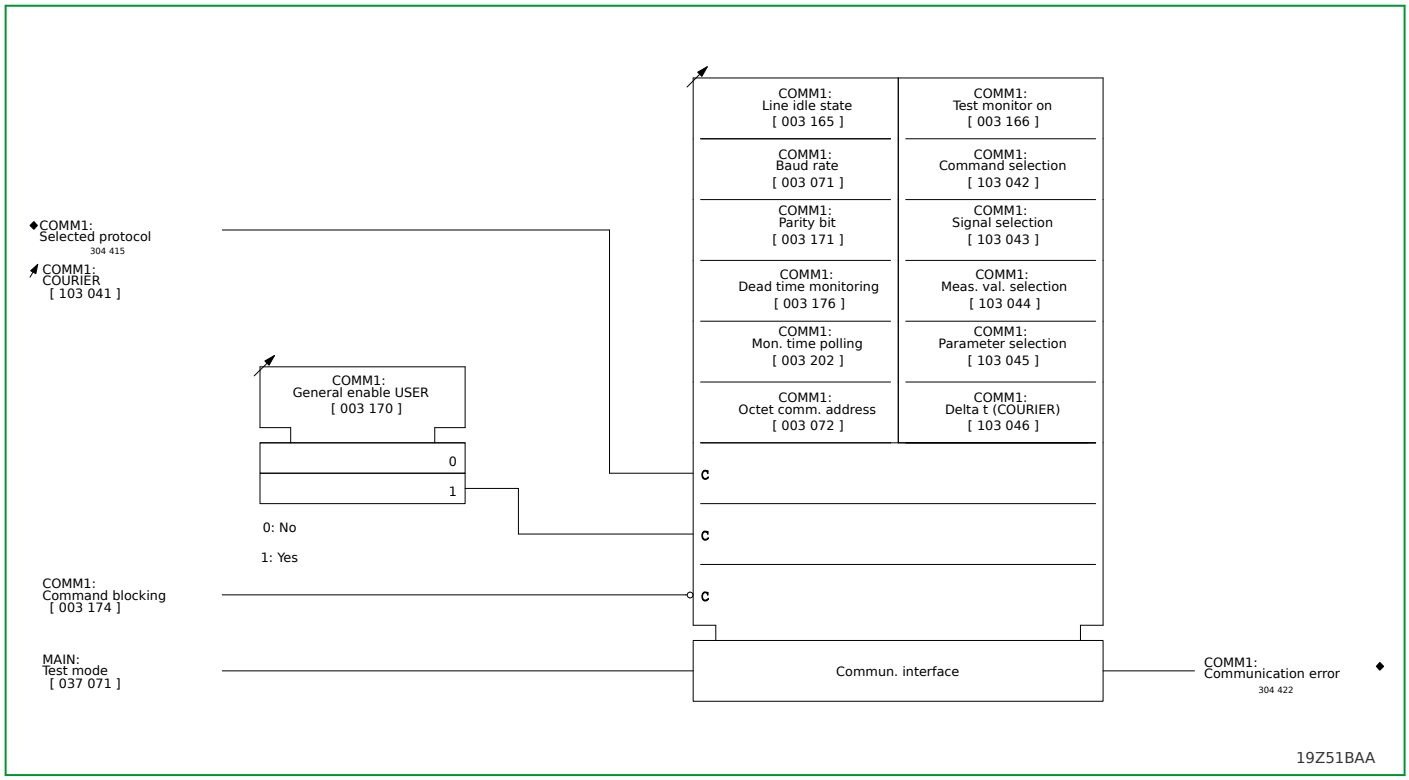

Fig. 3-16: Communication interface 1, settings for the COURIER protocol.

3.5.2.1 COMM1 – Checking Spontaneous Signals

For interface protocols based on IEC 60870-5-103, IEC 870-5-101, or ILS-C it is possible to select a signal for test purposes. The transmission of this signal to the control station as ‘sig. start‘ or ‘sig. end‘ can then be triggered using setting parameters.

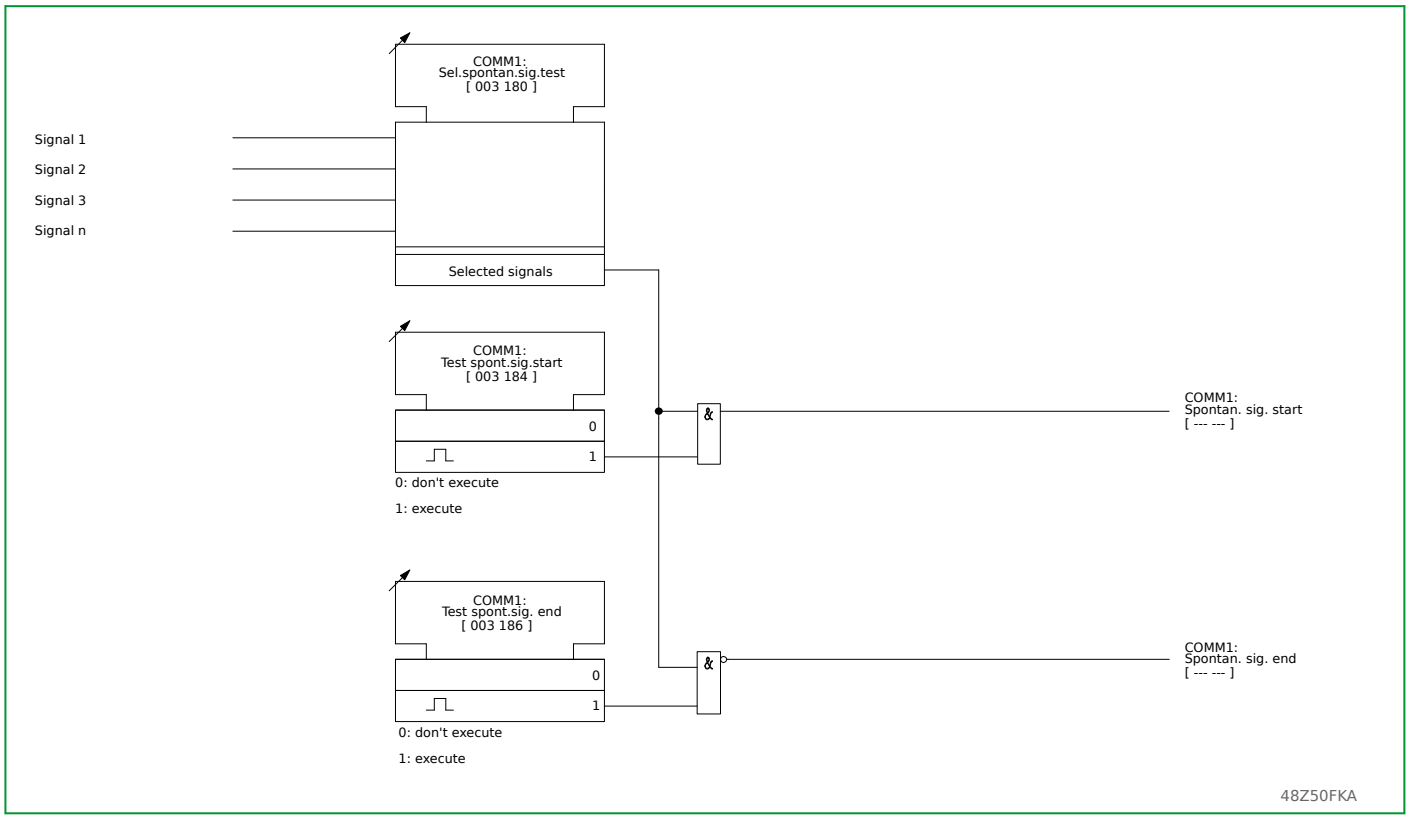

Fig. 3-17: COMM1 – Checking spontaneous signals.

3.5.2.2 Checking Switchgear Contact Positions and Signals

When checking during test operations with the interface protocols based on IEC 60870-5-103 it is possible to trigger signals (SIG) and contact positions (DEV) from the control part.

The following parameters are available:

- (221 105) COMM1: Sel. pos. dev.test
  Selection possibilities:
  - *Not assigned*
  - *DEV01 ... DEV03*
- (221 106) COMM1: Test position dev.
  Selection possibilities:
  - *don't execute*
  - *execute open*
  - *execute close*
  - *execute intermed.*

3.5.3 Communication Interface 2 (Function Group COMM2)

Communication interface 2 supports the IEC 60870-5-103 interface protocol.

It is provided only on the Serial communication module. It is intended for remote setting access only.

In order for data transfer to function properly, several settings must be made in the P633.

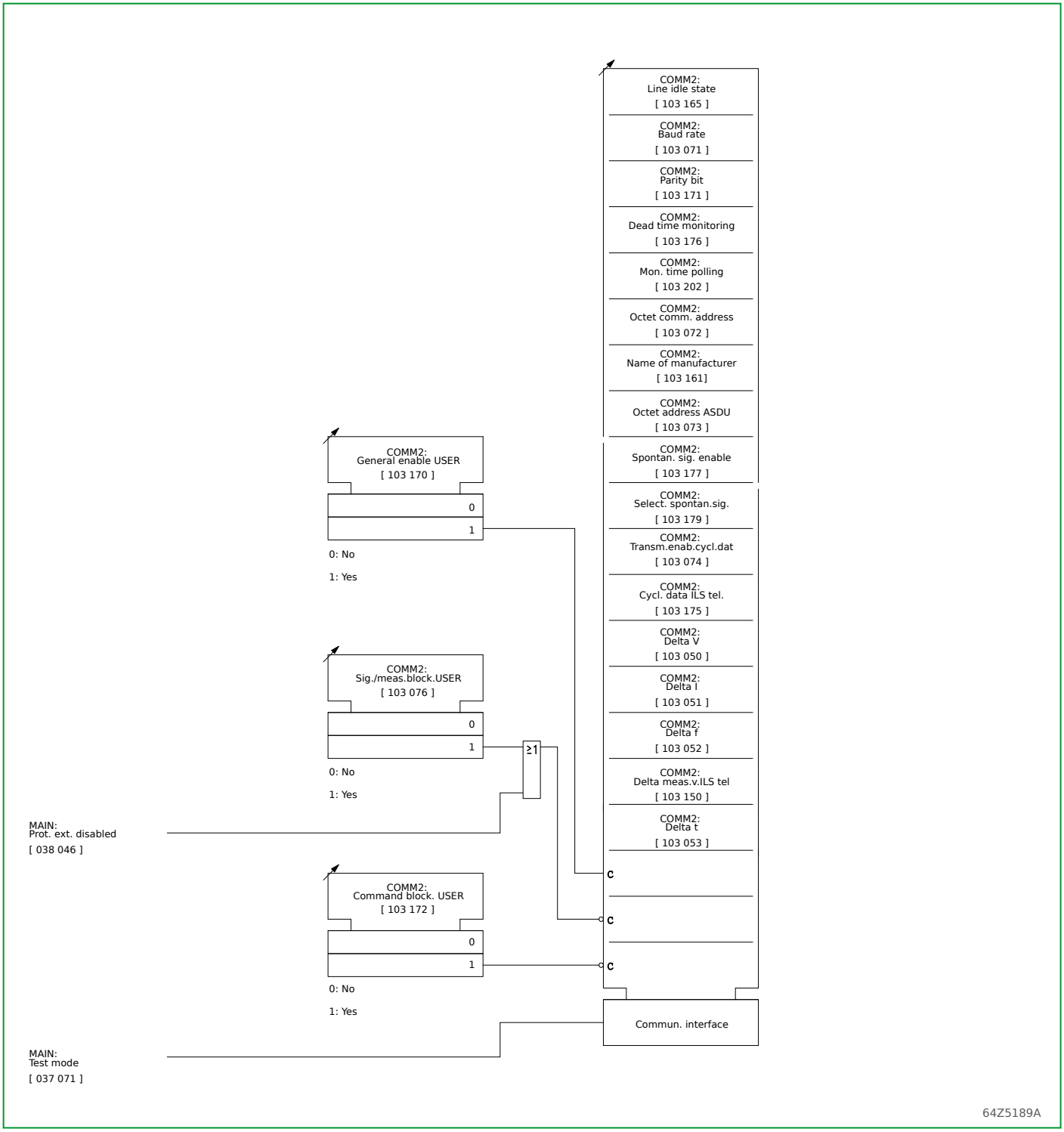

Fig. 3-18: Settings for communication interface 2.

3.5.3.1 COMM2 – Checking Spontaneous Signals

It is possible to select a signal for test purposes. The transmission of this signal to the control station as ‘sig. start‘ or ‘sig. end‘ can then be triggered via the local control panel.

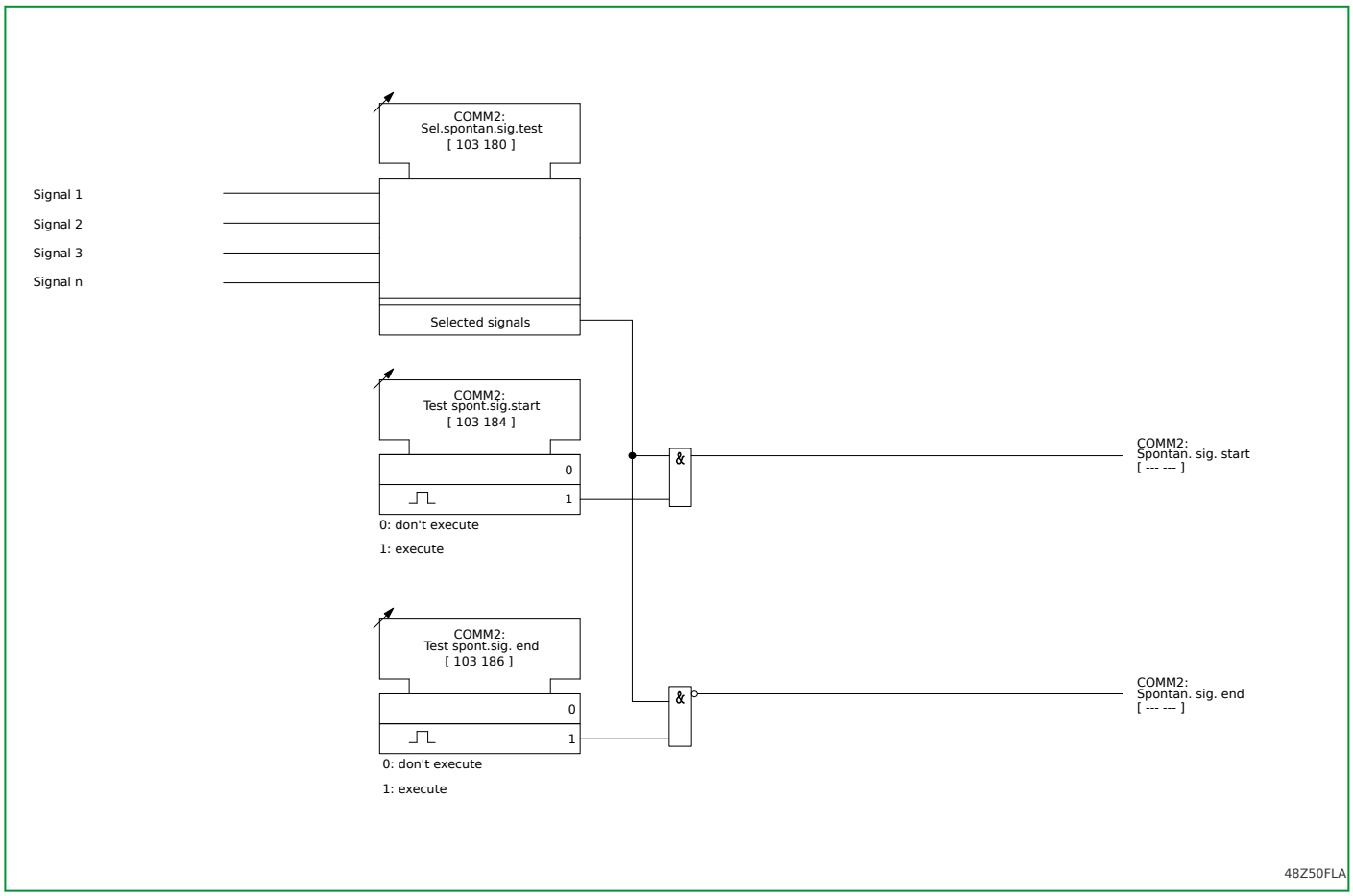

Fig. 3-19: COMM2 – Checking spontaneous signals.

3.5.4 Communication Interface Ethernet (Function Groups IEC, GOOSE and VINP)

3.5.4.1 Communication Module

From the software version -660, the Single IP Ethernet module and Redundant IP Ethernet module are available for the devices of the Easergy MiCOM 30 Series. To get information of the former Ethernet module, please refer to the manuals before -660.

The P633 Transformer Differential Protection Device can be fitted with new communication module, the Single IP Ethernet module or Redundant IP Ethernet module. (See Chapter 15, (p. 15-1) for the exact order information and Section 5.7, (p. 5-26) for the location and connection diagrams.)

The Ethernet modules are developed to support PRP/HSR/RSTP redundancy protocol, conformance of IEC 61850 edition 1 and 2, Cyber Security (CS) and Flexible Product Naming (fPN).

3.5.4.1.1 Hardware Modules

Four modules are available for Ethernet communication, two Single IP Ethernet Boards (SEB) and two Redundant IP Ethernet Boards (REB). *Easergy MiCOM 30* Series are constructed from standard hardware modules.

The Ethernet module is fitted into Slot 2 of the P633. For REB, each module has three MAC addresses, one for the managed embedded switch and two for the P633. The following table lists the item numbers of the Ethernet module variants:

Type	Item number	Description	Width
A	9652161	SEB copper: 1 * RJ45 + 1 * IRIG-B	4 TE
A	9652162	SEB fiber: 1 * RJ45 + 1 * SFP-LC + 1 * IRIG-B	4 TE

Tab. 3-3: Single IP Ethernet Module variants.

Type	Item number	Description	Width
A	9652159	REB copper: 3 * RJ45 + 1 * IRIG-B	4 TE
A	9652160	REB fiber: 1 * RJ45 + 2 * SFP-LC + 1 * IRIG-B	4 TE

Tab. 3-4: Redundant IP Ethernet Module variants.

Only Redundant IP Ethernet module can support PRP/HSR/RSTP protocol.

3.5.4.1.2 Redundancy Protocols

The following list shows Schneider Electric’s implementation of Ethernet redundancy, which has three variants with embedded IEC 61850, plus PRP, HSR and RSTP redundancy protocols.

Parallel Redundancy Protocol (PRP IEC 62439-3 (2012))

- The PRP uses two independent Ethernet networks that operate in parallel. The PRP is a “redundancy in the devices” method that provides bumpless switchover in case of failure or reintegration. Furthermore, it provides the shortest Ethernet network reconfiguration time as network reconfiguration is seamless.

High-availability Seamless Redundancy Protocol (HSR IEC 62439-3 (2012))

- HSR method is independent of any industrial Ethernet protocol and typically used in a ring topology. Nodes within the ring are restricted to be HSR-capable bridging nodes, thus avoiding the use of dedicated bridges. A simple HSR network consists of doubly attached bridging nodes, each having two ring ports, interconnected by full-duplex links.

Rapid Spanning Tree Protocol (RSTP IEEE 802.1w)

- This protocol variant offers compatibility with any RSTP device. RSTP is a standard used to quickly reconnect a network fault by finding an alternative path, allowing loop-free network topology. Although RSTP can recover network faults quickly, the fault recovery time depends on the number of devices and the topology.

3.5.4.1.3 RSTP Configuration

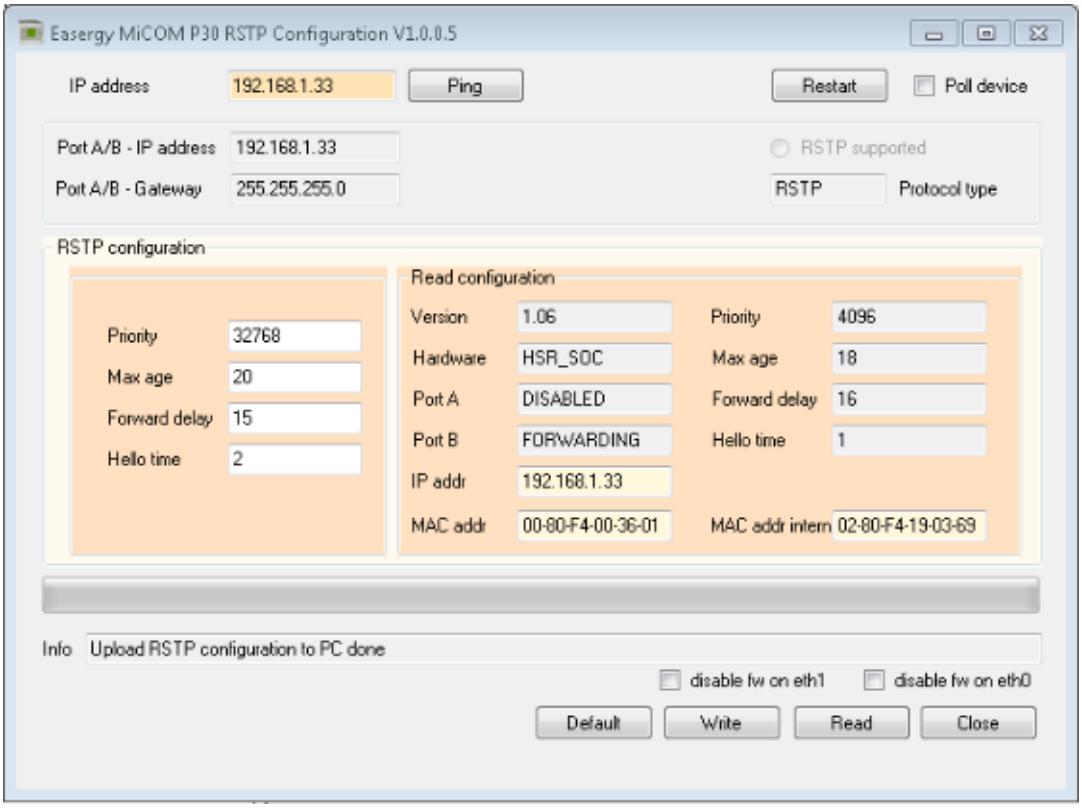

Fig. 3-20: RSTP configuration.

Parameter	Description
Priority	The port priority in the spanning tree.
Max age	The maximum age of the information transmitted by the Bridge when it is the Root Bridge.
Forward delay	The delay used by Bridges to transition Root and Designated Ports to Forwarding.
Hello time	The interval between periodic transmissions of BPDU message.

Tab. 3-5: RSTP configurable parameters.

From the software version -661, Easergy MiCOM P30 redundant brick configuration tool is available to configure and read the RSTP configurations.

3.5.4.1.4 Generic Functions for All Redundant Ethernet Modules

Ethernet 100Base Fx/Tx

The fiber optic ports are full duplex 100 Mbps LC connectors or wire RJ45 supports 100 Mbps.

Forwarding

The devices from the families Easergy MiCOM 30, 40, the C264 and the MiCOM H switches support store and forward mode. The MiCOM switch forwards messages with known addresses to the appropriate port. The messages with unknown addresses, the broadcast messages and the multicast messages are forwarded out to all ports except the source port. MiCOM switches do not forward error packets, 802.3x pause frames or local packets.

Forwarding is active when HSR or RSTP protocol is selected.

Priority Tagging

802.1p priority is enabled on all ports.

Simple Network Management Protocol – SNMP

Simple Network Management Protocol (SNMP) is the network protocol developed to manage devices in an IP network. SNMP relies on a Management Information Base (MIB) that contains information about parameters to supervise. The MIB format is a tree structure, with each node in the tree identified by a numerical Object IDentifier (OID). Each OID identifies a variable that can be read or set using SNMP with the appropriate software. The information in the MIBs is standardized.

Various SNMP client software tools can be used with the Series 30, 40, C264 and Hx5x range. Schneider Electric recommends using an SNMP MIB browser which can perform the basic SNMP operations such as *GET*, *GETNEXT*, *RESPONSE*. To access the network using SNMP, use the IP address of the embedded switch in the Redundant IP Ethernet module.

SNMP is applied for Cyber Security.

Network Time Protocol – NTP

Network Time Protocol is supported by both the P633 and the Redundant Ethernet switch. NTP is used to synchronize the clocks of computer systems over packet-switched, variable-latency data networks. A jitter buffer is used to reduce the effects of variable latency introduced by queuing in packet switched networks, ensuring a continuous data stream over the network.

The P633 receives the synchronization from the NTP server. This is done using the IP address of the NTP server entered into the P633 from the *IED Configurator* software.

3.5.4.2 Communication Protocols

3.5.4.2.1 IEC 61850

IEC 61850 was created jointly by users and manufacturers as an international standard. The main target of IEC 61850 is interoperability of devices. This includes the capability of two or more intelligent electronic devices (IED), manufactured by the same company or different companies, to exchange data for combined operation.

This communication standard IEC 61850 has now created an open and common basis for communication from the process control level down to the network control level, for the exchange of signals, data, measured values and commands.

For a standardized description of all information and services available in a field device, a data model, which lists all visible functions, is created. Such a data model, specifically created for each device, is used as a basis for an exchange of data between the devices and all process control installations interested in such information. In order to facilitate engineering at the process control level a standardized description file of the device, based on XML, is created with the help of the data model. This file can be imported and processed further by the relevant configuration program used by the process control device. This makes possible an automated creation of process variables, substations and signal images.

Available is the following documentation providing the description of the IEC 61850 data model which is used with the P633:

- ICD file based on XML in the SCL (Substation Configuration Description Language) with a description of data, properties and services, available from the P633, that are to be imported into the configuration tool “IED Configurator” or into a system configurator.
- PICS_MICS_ADL file with the following contents:
  - PICS (Protocol Implementation Conformance Statement) with an overview of available services.
  - MICS (Model Implementation Conformance Statement) with an overview of available object types.
  - ADL (Address Assignment List) with an overview of the assignment of parameter addresses (signals, measuring values, commands, etc.) used by the P633 with the device data model as per IEC 61850.

3.5.4.2.1.1 Client Log-on

Communication in Ethernet no longer occurs in a restrictive master slave system, as is common with other protocols. Instead, server or client functionalities, as defined in the “Abstract Communication Service Interface” (ACSI, IEC 61870-7-2), are assigned to the devices. A “server” is always that device which provides information to other devices. A client may log on to this server in order to receive

information, for instance “reports”. In its function as server the P633 can supply up to 16 clients, linked into the network, with spontaneous or cyclic information.

3.5.4.2.1.2 Clock Synchronization

With IEC 61850 clock synchronization is effected via the SNTP protocol, defined as standard for Ethernet. Here the P633 functions as an SNTP client.

For clock synchronization one can choose between the operating modes *Anycast* from SNTP Server or *Request from Server*. With the first operating mode synchronization occurs by a broadcast message sent from the SNTP server to all devices in the network, and in the second operating mode the P633 requests a device-specific time signal during a settable cycle.

Two SNTP servers may be set. In this case, clock synchronization is preferably performed by the first server. The second server is only reverted to if no signal is received from the first server.

When looking at the source priority for clock synchronization, which is set at the MAIN function then, by selecting *COMM1/IEC*, synchronization per IEC 61850 is automatically active but only if this communication protocol is applied.

3.5.4.2.1.3 Generating Datasets, Reporting

The specific project related feature of the P633’s communications behavior is determined by the configuration of datasets, reports and high priority transmission methods. A piece of information must be included in a dataset so as to be transmitted as a signal. A dataset is a list to transmit certain data objects. The selection of data objects and the resulting length of the dataset is determined by the application; merely the GOOSE capacity, i.e. the maximum size of a dataset to be transmitted by GOOSE, is limited to 1500 bytes.

> *It is not possible to read the IEC configuration back from the P633 if the “Dataset” sizes exceed the GOOSE size limit significantly. Therefore it is recommended to limit the “Dataset” size(s) to 100% of the GOOSE capacity. Too large a dataset can spoil IEC 61850 communication. Hence, the dataset size limit of 100% of the GOOSE capacity should not be exceeded, neither for GOOSE nor for reports.*

Data objects provided by the P633 are available for selection with a structure as specified by IEC 61850. Within the quality descriptor for each piece of information the invalid bit and the test bit are served according to the P633’s state; the other attributes are not set. Any number of datasets may be created with the IED Configurator. Saving datasets at System\LLN0 is compulsory. The knowledge of dataset content is imperative for decoding and evaluating received signals. Configuration files possess a listing of all datasets with a description of all data objects included.

Next to their use with high priority transmission methods (see Section 3.5.4.2.1.9, (p. 3-35)) datasets are used mainly for reporting. The P633 provides up to 16 unbuffered reports and 8 buffered reports independent of the number of clients logged-on. Management is arranged into 16 Unbuffered Report Control Blocks (urcbA to urcbP) and 8 Buffered Report Control Blocks (brcbA to brcbH). Whereas with unbuffered reporting pieces of information may be lost during a communications failure, the buffered report control blocks support a buffered transmission which is required for the uninterrupted writing of events. A pre-defined dataset may be assigned to each report which will then determine which data object will be transmitted with the relevant report. Assigning datasets is not limited; the same dataset may be referenced in various reports or even in GOOSEs.

The P633 can serve up to 16 clients. Each client can log-on to any number of available reports. One unbuffered report can be allocated to max. 8 clients, and

one buffered report can be allocated to max. 4 clients. A client is then able to activate the wanted report for himself and to set the transmission behavior to his requirements. The system concept with intended clients must be taken into account when datasets are assigned to the reports.

Reports are not received by the P633.

3.5.4.2.1.4 Transmitting Modeled Signals Not Provided by the IEC 61850 Data Model

In addition to the information included in the IEC 61850 data model an optional number of up to 16 signals can be selected from all the signals available in the P633 to be transmitted via reporting. A selection of state signals (shuttling to communications) is made by setting IEC: SigGGIO1 selection. The data object indexes defined for SigGGIO1 must follow the sequence given for the ‘m out of n’ selection for the state signals. The indexes SigGGIO1.ST.ind1 to SigGGIO1.ST.ind16 may then be included in the datasets just as the other data objects.

3.5.4.2.1.5 Single Commands

Single commands (e.g. short command, long command, persistent command) are configured with the operating program. Sending commands to the P633 can be carried out from all clients that have previously logged-on to the P633. But only one command at a time is carried out. The operating mode *Direct control with normal security* is provided for single commands.

3.5.4.2.1.6 Control and Monitoring of Switchgear Units

Configuration of control of switchgear devices for the IEC 61850 is only possible with a special configuration software, the *IED Configurator*.

Control of switchgear units can be carried out from all clients that have previously logged on to the P633. Only one control command is executed at a time, i.e. further control requests issued by other clients during the execution of such a command are rejected. The following operating modes [IC]: ctlModel are available to control external devices by clients and they can be individually set for each switchgear device:

- *Status only*
- *Direct control with enhanced security*
- *SBO (Select before operate) with enhanced security*

When set to the operating mode *Select before operate* the switchgear unit is selected by the client before the control command is issued. Because of this selection the switchgear unit is reserved for the client. Control requests issued by other clients are rejected. If after a selection no control command is issued by the client the P633 resets this selection after a settable timeout period [IC]: sboTimeout (default: 2 minutes) has elapsed.

If with a system application it must be ensured that only one control command at a time is being processed system wide ("uniqueness") then interlocking of secondary devices among themselves is setup with GOOSE. For further details see description of function group GOOSE.

The switchgear device’s contact positions are signaled to the clients with the reports.

> *Setting parameters labeled with brackets – i. e. “[IC]:...” – instead of a normal function group are set with the “**I**ED **C**onfigurator”. They cannot be modified from the local control panel (HMI), nor with the operating program.*
>
> *There is a separate Chapter “IEC 61850 Settings via IED Configurator” with a description of all such setting parameters.*

3.5.4.2.1.7 Originator Category

The *Originator* is an information type defined by IEC 61850, which is sent with switch commands and position signals of switchgear units. This kind of data consists of two information items:

- *Originator Identification*: This is text describing the originator of the switch command. (If unknown, then an empty text string is sent.)
- *Originator Category*: This is the originator of the command according to a list of standardized categories.

The range of values of the *Originator Category*, as listed in the following table, is supported.

	Originator category	Originator Identification	Use Case / Comment
1	*remote-control*	See note [1] (at the end of this table).	The control command is sent by an operator at station level.
2	*automatic-remote*	See note [1].	The control command is sent by an automatic function at station level.
3	*station-control*	See note [1].	The control command is sent by an operator at network level.
4	*automatic-station*	See note [1].	The control command is sent by an automatic function at network level.
5	*bay-control*	*Local HMI Control*	The control command is generated at the local HMI of the P633.
6	*bay-control*	*Local EXT Control*	The control command is sent via binary input (see note [2]) by an operator at an external local control panel, using the setting ● (221 061) MAIN: Electrical control = *Local* and any of the following input signals: ● DEVxx: Inp.asg.el.ctrl.open ● DEVxx: Inp.asg.el.ctr.close.
7	*remote-control*	*Remote EXT Control*	The control command is sent via binary input (see note [2]) by an operator at an external local control panel, using the setting ● (221 061) MAIN: Electrical control = *Remote* and any of the following input signals: ● DEVxx: Inp.asg.el.ctrl.open ● DEVxx: Inp.asg.el.ctr.close.
8	*process*	*Spontaneous Process Event*	A trip or close command which is generated by a protection function. (See also note [2].)
9	*process*	*Spontaneous Process Event*	There is a spontaneous position change of the switchgear device. Possible causes: ● A manual switch command ● The operation of another protection and control device Further possible causes: ● Loss of supply voltage of electrical input signals ● Faulty wiring ● Faulty switchgear device (However, this usually results in an intermediate position 00 or 11 of the switchgear device.)

	Originator category	Originator Identification	Use Case / Comment
10	*process*	*IED Restart*	Power-up or restart of the P633, intentionally or spontaneously. Possible causes: ● Loss of the auxiliary supply voltage of the P633 ● Commissioning activities ● Operation of self-monitoring of the P633
11	*maintenance*	*Test Mode Operation*	The P633 is in test mode. The test mode can be activated either by setting parameter ● (003 012) MAIN: Test mode USER or by the binary signal ● (037 070) MAIN: Test mode EXT (See also note [2].)

[1]: The P633 copies the Originator Identification from the command request into the information report.

[2]: External binary signals can be received via various interfaces:

- Opto-coupler inputs
- GOOSE substation communication
- Assignment of LOGIC outputs

The P633 does never send the *Originator Category* “*automatic-bay*”.

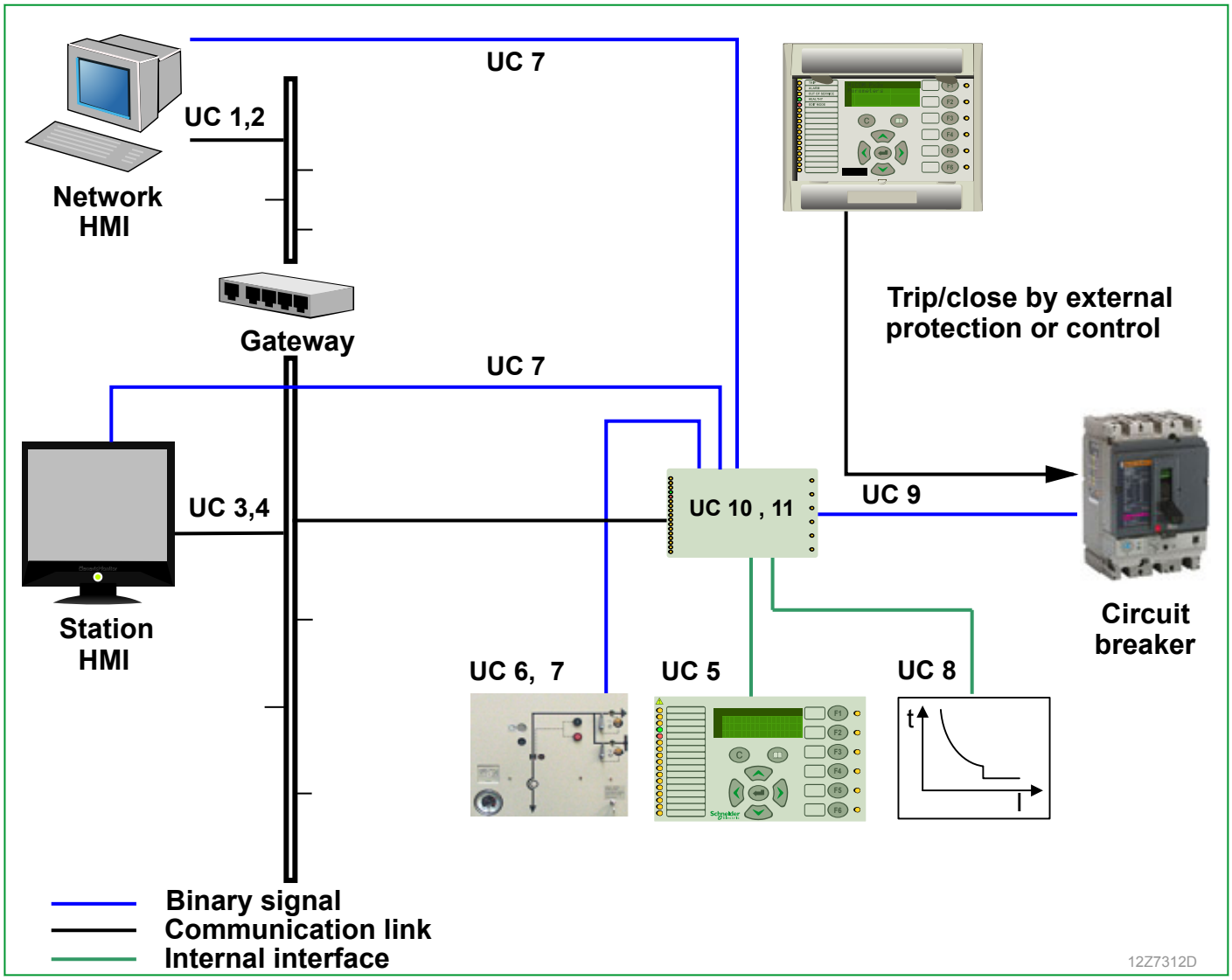

Fig. 3-21: Use cases in the network context. The "UC" numbers refer to Originator Categories in the table above.

3.5.4.2.1.8 Fault Transmission

Transmission of fault files is supported per "File Transfer". COMTRADE fault files in the P633 are transmitted uniformly either as ASCII or binary formatted files.

3.5.4.2.1.9 High Priority Transmission of Information

Whereas normal server-client services are transmitted at the MMS and TCP/IP level the high priority transmission of information is carried out directly at Ethernet level. Furthermore messages in such a particular form can be received by all participants in the relevant sub-network, independent of their server or client function. They are deployed in instances where high speed transmission of information is wanted between two or more devices. Applications, for example, are reverse interlocking, transfer trip or decentralized substation interlock.

The standard IEC 61850 provides the Generic Object Oriented Substation Event (GOOSE) for high priority transmission of information. The GOOSE enables transmission of all data formats available in the data model, such as binary information, integer values, two-pole contact position signals or analog measured values. The P633 supports receipt and evaluation of GOOSE including binary information and two-pole contact position signals from external devices.

3.5.4.2.1.10 Setting Group Control Block

The setting-group-control-block (SGCB) model allows for an instance to have several values that can be used one at a time. The SGCB provides mechanisms to switch between several values of one or more data objects. Values that belong together build the setting group.

3.5.4.2.2 IEC 60870-5-104

3.5.4.2.2.1 Overview

The IEC 60870-5-104 “Network access for IEC 60870-5-101 using standard transport profiles” is based on IEC 60870-5-101 “Transmission protocols – Companion standard for telecontrol tasks”, and was originally intended for SCADA applications but it is also applied in station bus communication.

The IEC 60870-5-104 implementation in Easergy MiCOM 30 relays includes server and client functionality with multiple connections. For every connection the types and addressing of every ASDU can be configured in data models. The data models also include a logic module to manipulate the data and to realize logical functions e.g. batch messages.

A Easergy MiCOM 30 bay unit can also act as a central unit. For this more complex logical functions two additional programs may be started: the logic and the boolean interlocking. These programs are used for functions like calculation of busbar voltage or substation interlocking.

The configuration for IEC 60870-5-104 is done with a special configuration tool which will be integrated in Easergy Studio like the IED Configurator.

In this manual only a short description of the IEC 60870-5-104 functions is possible. For detailed description, please refer to IEC 60870-5-104 Application Guide. Because the implementation of IEC 60870-5-104 is configurable, there is also a standardized interoperability document, the IEC 60870-5-104 Interoperability Guide.

3.5.4.2.2.2 Integration

After setting IEC: General enable USER, the protocol IEC 60870-5-104 can be selected in Function group IEC by switching on IEC: IEC60870-5-104enable and selecting IEC 60870-5-104 in IEC: IEC prot. variant. The other settings visible for IEC 60870-5-104 protocol are functioning like described for IEC 61850, see Section 3.5.4.3, (p. 3-43):

- IEC: ETH COMM Mode
- IEC: Block Port A/B
- IEC: Block Port C

The protocol IEC 60870-5-104 also uses two configuration banks, one active and one standby bank. The configuration bank switching with IEC: Switch Config. Bank is functioning like in IEC 61850.

All settings in the IEC function group concerning the time zone and summer time are working like described for IEC 61850.

The setting IEC 60870-5-104 in IEC: IEC prot. variant selects only the communication protocol. The additional services on the Ethernet module working like described for IEC 61850:

- Checking Spontaneous Signals, see Section 3.5.4.3.1, (p. 3-46)
- Checking Switchgear Device Positions and Signals, see Section 3.5.4.3.2, (p. 3-47)
- Clock Synchronization, see Section 3.5.4.2.1.2, (p. 3-30)
- Virtual Local Area Network, see Section 3.5.4.2.3, (p. 3-40)
- Port Assignment, see Section 3.5.4.2.4, (p. 3-40)
- Secure Communication with the Easergy Studio via the Ethernet Interface, see Section 3.5.4.2.6, (p. 3-42)

3.5.4.2.2.3 Engineering

The communication function in IEC 60870-5-104 are configurable by the IEC 60870-5-104 configuration tool. The maximum configuration is:

- 5 IEC 60870-5-104 server connections
- 2 IEC 60870-5-104 clients

For usage in central functions additional programs may be started to compute more complex logical functions:

- Logic
- Boolean station interlocking

The setting of the IEC 60870-5-104 is done in the following steps:

- **Configuration**

  The first step is to configure the module, means to choose how many server lines are needed, how many servers need to be connected and whether logic and Boolean interlocking is needed.
- **Setting of parameters**

  In this step the main parameters for IEC 60870-5-104 and installed services will be set, e.g.
  - Port assignment, which service runs on which Ethernet port.
  - Network configuration, VLANs, IP-addresses, subnetwork masks, …
  - IEC 60870-5-104 parameters, server and client addresses, …
- **Mapping data**

  The incoming data from the device or any IEC 60870-5-104 connection may be mapped to any server or client connection of the module. The type and addressing of the IEC 60870-5-104 messages is individual configurable. In addition to the mapping data can be manipulated and linked together through functions, for example:
  - Logical functions (negation, and, or, …),
  - Arithmetical functions (multiply, division, …),
  - Time functions (on delay, off delay, …),
  - Set functions for data and cause of transmission,
  - Filter functions (deadband, average, …).

  The mapping and manipulating of the data can be done individually in all IEC 60870-5-104 servers lines and clients.

For detailed description of IEC 60870-5-104 engineering and functions, please refer to IEC 60870-5-104 Application Guide.

3.5.4.2.2.4 IEC 60870-5-104 Server and Client Functions

The IEC 60870-5-104 server connections can work in two modes:

- **IEC 60870-5-104 Station Bus**

  In this mode one client can connect to the server. Redundancy is not used.
- **IEC 60870-5-104 SCADA connection**

  In this mode up to 8 clients can connect to the server in one redundancy group. The redundancy can be configured in 2 modes:
  - **Redundancy defined in IEC 60870-5-104**

    In this mode one connection is active. Data messages are transmitted and received over this link. The other connections are passive, no data is transmitted. The links will be supervised by sending test frames.
  - **Multiple active connections**

    In this mode all connections transmit and receive data messages. It is up to the client to choose the active connection by processing the data.

One IEC 60870-5-104 client can connect to maximum 32 servers. Two IEC 60870-5-104 client processes can run on the communication module. The information of each connected servers can be mapped individually.

In IEC 60870-5-104 server and client include the following protocol related functions:

- Separation of communication layers in two processes, one for link and transport layer and one for application layer.
- Queues for priority controlled transmission of commands, signals and measurements.
- Packing and unpacking of messages with multiple information objects.
- Sending and receiving of ASDUs in reverse direction, signals in command direction and commands in monitor direction.
- Supervision and conversion of command procedures Direct Execute and Select and Execute (server only).
- Supervision of control uniqueness (server only).

For detailed list of supported IEC 69870-5-104 protocol function, please refer to IEC 60870-5-104 Interoperability Guide.

3.5.4.2.3 Virtual Local Area Network

From the software version -661, VLAN is available for the devices of the Easergy MiCOM 30 Series.

A virtual LAN (VLAN) is any broadcast domain that is partitioned and isolated in a computer network at the data link layer (OSI layer 2). VLANs work through tags within network packets and tag handling in networking systems - recreating the appearance and functionality of network traffic that is physically on a single network but acts as if it is split between separate networks. It is possible to assign traffic to different VLANs to allow the separation of the traffic while using a single physical network.

In the table below shows the link between the Hardware modules/ ports and IED configurator inclusive requested VLAN support capability. Only physical interface 1 is to support VLANs in fixed number (2 VLANs for physical interface 1).

Module Type	Interface 1	Interface 2	Interface 1 & VLAN support	Interface 2 & VLAN support
REB fiber	Port A/B	Port C	Yes	No
REB copper	Port A/B	Port C	Yes	No
SEB fiber	Port A	Port C	Yes	No
SEB copper	Port C	-	Yes	-

Tab. 3-6: VLAN support capability.

3.5.4.2.4 Port Assignment

Port assignment is the capability to assign TCP/IP services to a dedicated communication interface. The communication interface can be a physical interface or a virtual interface of the communication module. The port assignment can be configured for physical Ethernet interfaces as well as for VLANs.

Port assignment allows to configure TCP/IP services of networks for the customer needs.

Default configuration

In general the Ethernet communication module is designed that all TCP/IP services are working on all physical / virtual interfaces. The factory delivers a communication module without any specific port assignment. In this case – without port assignment and without VLAN – the communication services are available without restriction on the physical Ethernet Interfaces. Depending on the physical module type all services are working on A/B and C for redundant modules or A and C for the single fiber module or only C for the single copper module.

There is one exception the Web services for the SAT tool are only available on one interface at a time. Please find the details in Section 3.5.4.2.5, (p. 3-42).

Port assignment example

With the port assignment the user can choose which services shall work on which physical/ virtual interface. This allows for example to configure two networks, where one network is dedicated to the station bus and the related services and

the second network is dedicated for maintenance services. The user can configure configuration / administration services (configuration bus) as available on physical port C and the client application services (station bus) as available on port A/B.

The port assignment feature is available to together with the VLAN feature since the firmware version 661. The same scenario as above can be configured with VLAN together. For example VLAN1 as station bus and VLAN2 as configuration bus.

TCP/IP service

The following list of TCP/IP services can be assigned to interfaces.

Services	Description
IEC 61850 (MMS)[1)]	All MMS services including report
Network time protocol (NTP)	NTP Service
IED configuration (TLS)	Services via TLS to configure the device from Easergy Studio
Basic administration (SSH/SFTP)[1)]	Update firmware, Read/Write MAC addresses
User management via RBAC (Webservice)[2)]	Web services for the SAT tool to configure security and the RBAC
1) **Minimum configuration:** at least ONE "IEC 61850 (MMS)" and at least ONE "Basic administration (SSH/SFTP)" should be enabled across all interfaces 2) "User management via RBAC (Webservice)" option can be fully disabled or only enabled on ONE of the available interfaces	

Tab. 3-7: TCP/IP service in port assignment.

Configured example

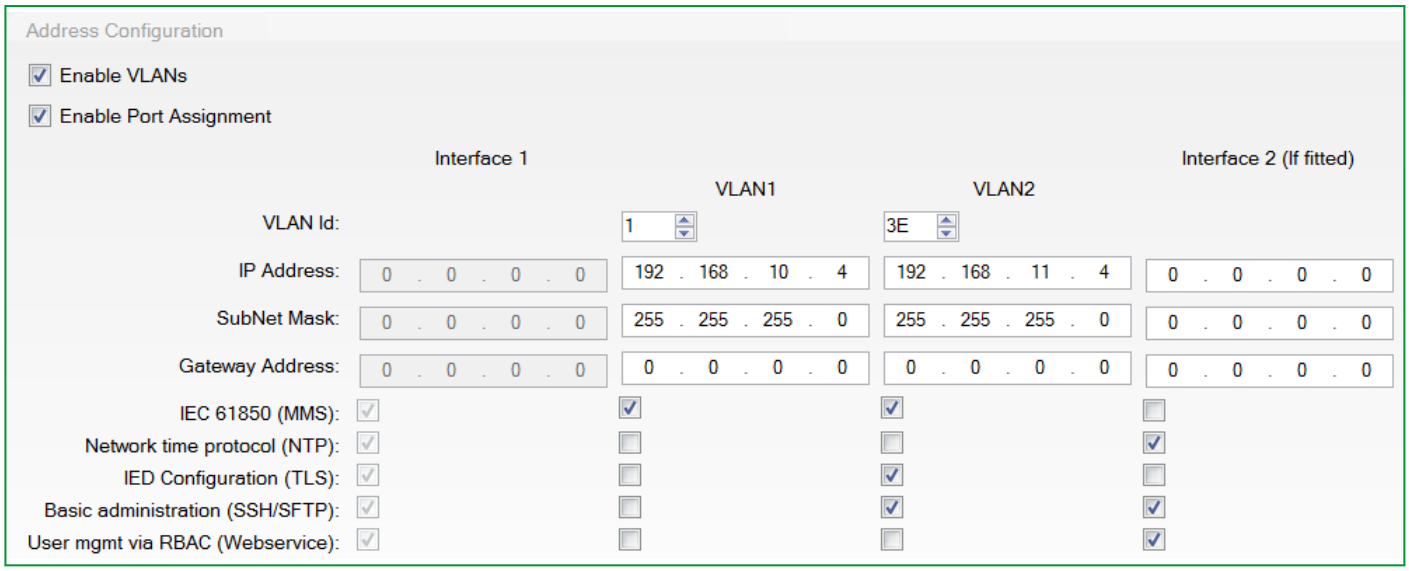

Fig. 3-22: VLANs and port assignment configured example.

Note that the "VLAN Id" is configured in HEX.

3.5.4.2.5 SAT-Tool Connectivity (w/wo Port Assignment)

The SAT (EcoStruxure™ Cybersecurity Admin Expert - Security Administration Tool) allows to configure security rights for the IEDs, e.g. the user names and passwords, access rights and roles for the user. The SAT tool is working with Web services.

The communication between SAT and IED is restricted to one interface at the same time. The interface can be changed via port assignment configuration. The default behaviour of the SAT tool – without port assignment is described in the following table:

Port Assignment Active	VLAN Active	Behavior SAT Web services are available on:	Toggle Mode (physical Ethernet port A/B or C)
No	No	Depending on the plugged cable to the physical interfaces the services switch between the physical Ethernet port A/B and C. ● Preferred is physical Ethernet port C	Yes
No	Yes	Fixed port assignment ● Physical Ethernet port C	No
Yes	No	One of the available physical interface is assigned via configuration for the Web services ● Physical Ethernet port A/B or C	No
Yes	Yes	One of the available physical and possible virtual interfaces is assigned via configuration for the Web services ● Physical Ethernet C or VLAN1 or VLAN2	No

Tab. 3-8: SAT Web services behavior.

3.5.4.2.6 Secure Communication with the Easergy Studio via the Ethernet Interface

The secure communication is available as of software version -660.
The communication will be done using port 4422. Ensure this port is left unblocked on the network.

When P633 and Easergy Studio are connected via the Ethernet interface, they will communicate securely using TLS (Transport Layer Security Protocol). The benefits of secure communication are:

- Help in the prevention of unwanted eavesdropping between Easergy Studio and the IED.
- Help in the prevention of modification of data between Easergy Studio and the IED.
- Ensure integrity of data.
- Help to prevent replay of data at a later data.

Setting up a connection, as a quick guide you need to do the following:

- In Easergy Studio, click the Quick Connect... button.
- Select the relevant Device Type in the Quick Connect dialog box.
- Select Ethernet port.
- Enter the relevant data i.e. IP address of IEDn
- Click Finish.
- Easergy Studio will attempt to communicate with the device.

When attempting to connect to the IED via Ethernet, Easergy Studio will first attempt to communicate with the IED via secure communication.

3.5.4.3 Configuration and Enabling

The IEC function group can be included in the configuration by setting the parameter IEC: Function group IEC. This parameter is only visible if the optional Ethernet communication module is fitted to the P633. After activation of IEC, all data points associated with this function group (setting parameters, IEC prot.variant etc.) become visible.

The function can then be enabled or disabled by setting IEC: General enable USER. IEC 60870-5-104, IEC 61850 Edition 1 or Edition 2 can be selected by setting IEC: IEC prot. variant. When Redundant IP Ethernet module is used, the redundancy protocols PRP/HSR/RSTP can be switched via IEC: ETH COMM Mode. Port A/B and service port C can be blocked with IEC: Block Port A/B and IEC: Block Port C.

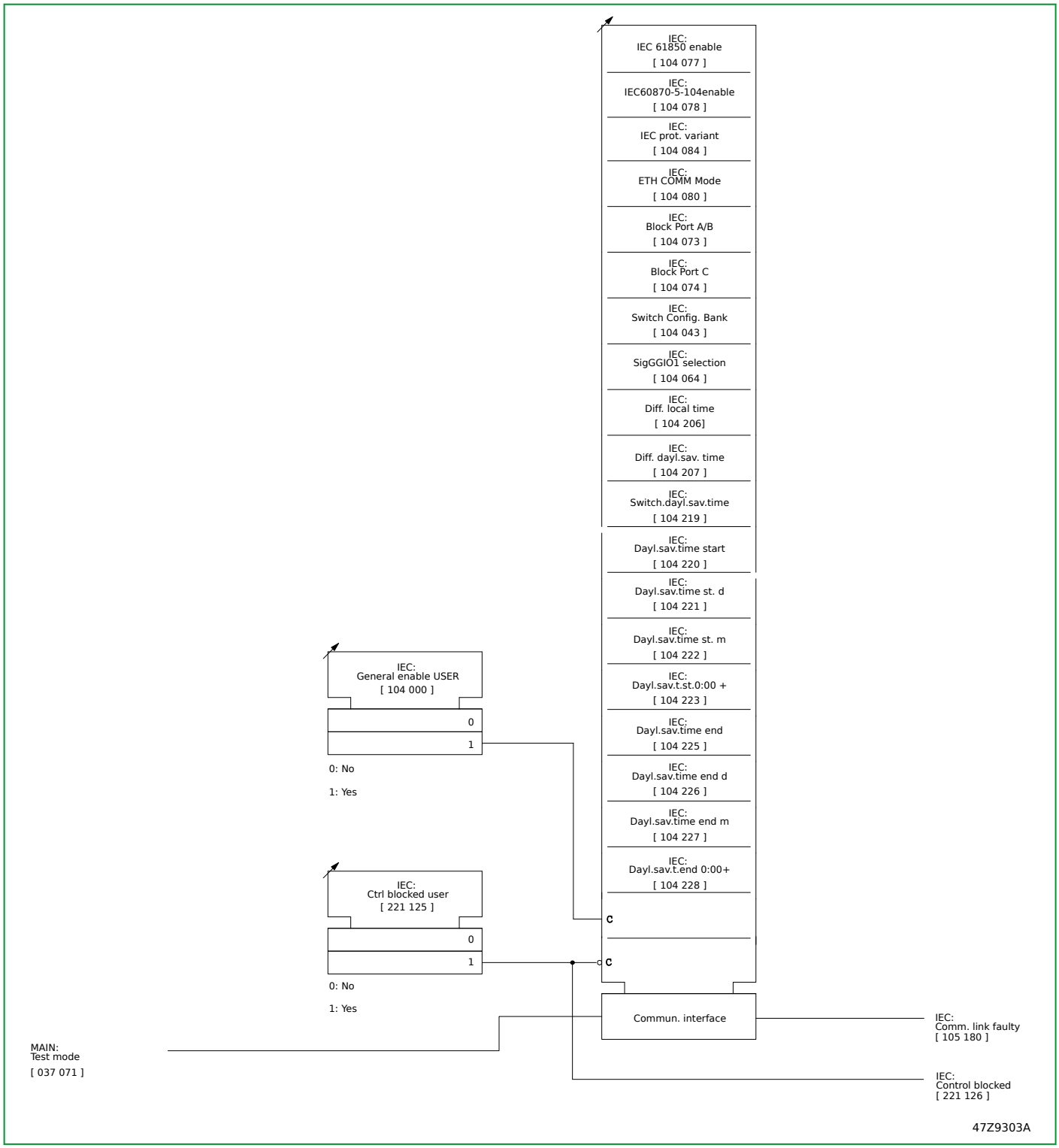

Fig. 3-23: Settings for communication interface IEC 61850.

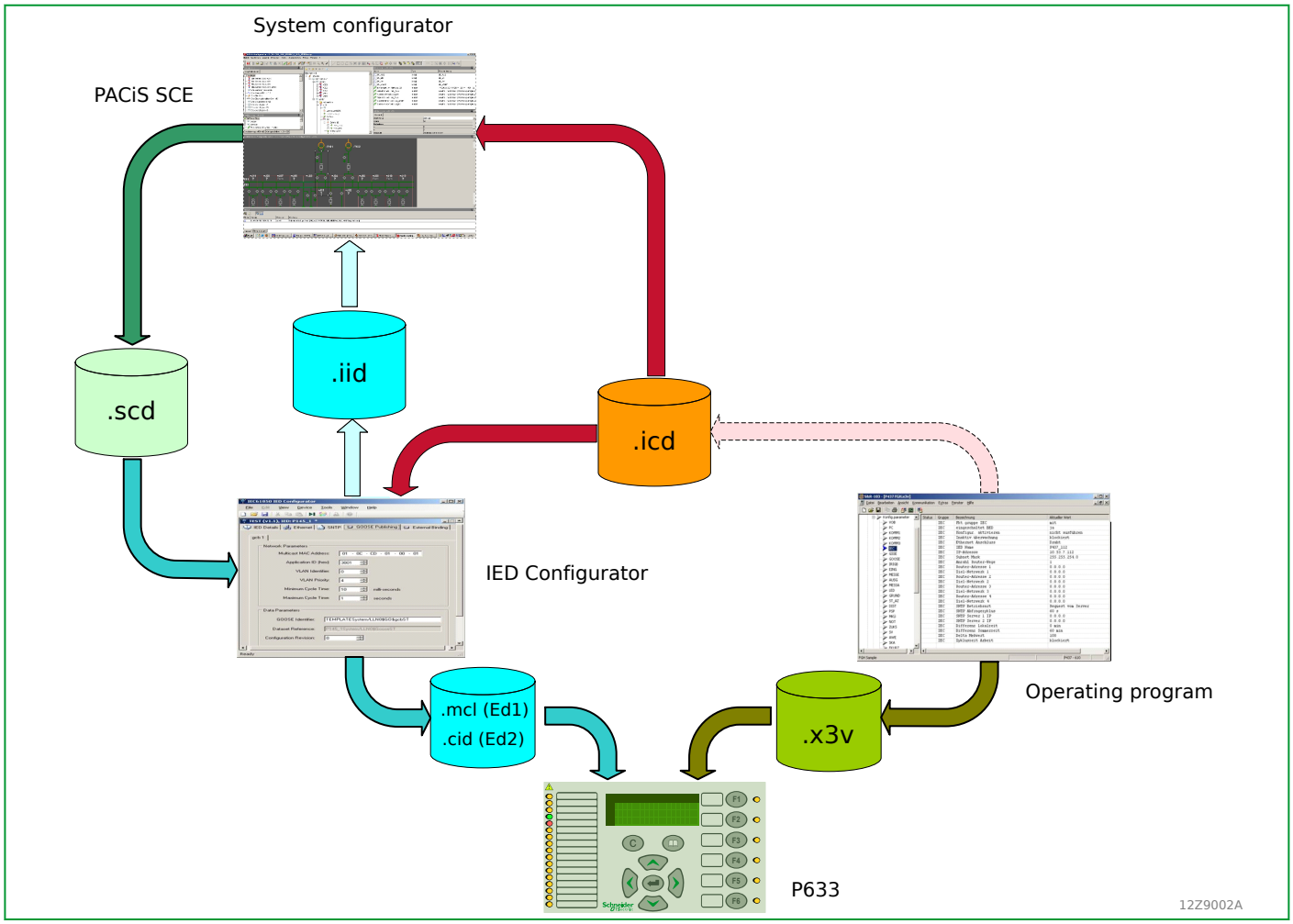

Fig. 3-24: Configuration according to IEC 61850-6.

The setting parameters from the IEC function group as well as the related GOOSE function group are not automatically active in the P633. The P633 features two memory “banks” one of which includes the active setting parameters. The other memory bank is used with the configuration procedure for parameters from the *IED Configurator* and the operating system. Specific project-related extensions of the IEC 61850 parameters from the *IED Configurator* are loaded into the P633 by downloading a .MCL file (Ed1) or .CID file (Ed2). The inactive communication parameters are activated by executing the command `IEC: Switch Config. Bank`. This command may also be issued from the *IED Configurator*.

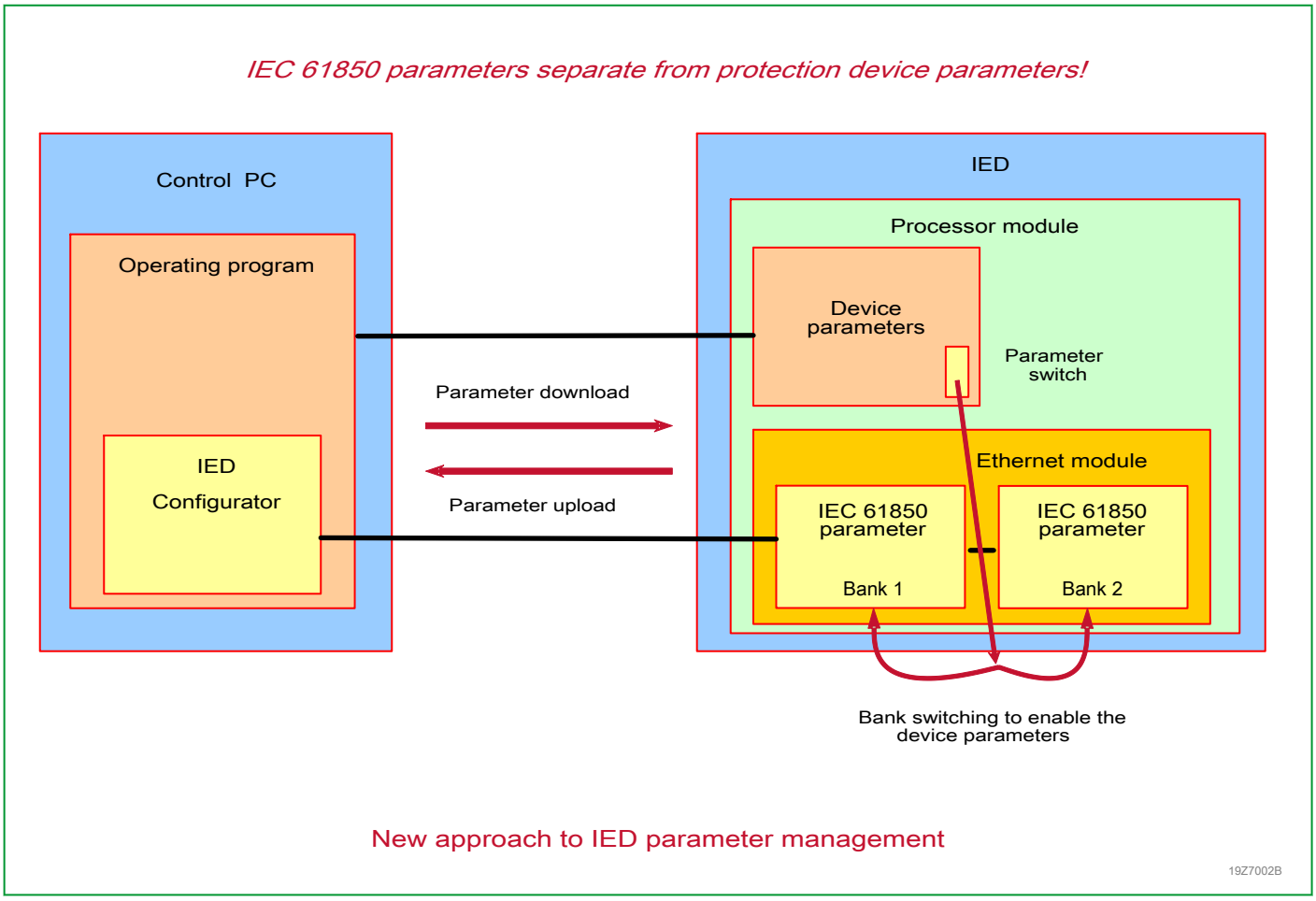

Fig. 3-25: Saving configuration parameters.

3.5.4.3.1 IEC – Checking Spontaneous Signals

It is possible to select a signal for test purposes. The transmission of this signal to the control station as ‘sig. start‘ or ‘sig. end‘ can then be triggered via the local control panel.

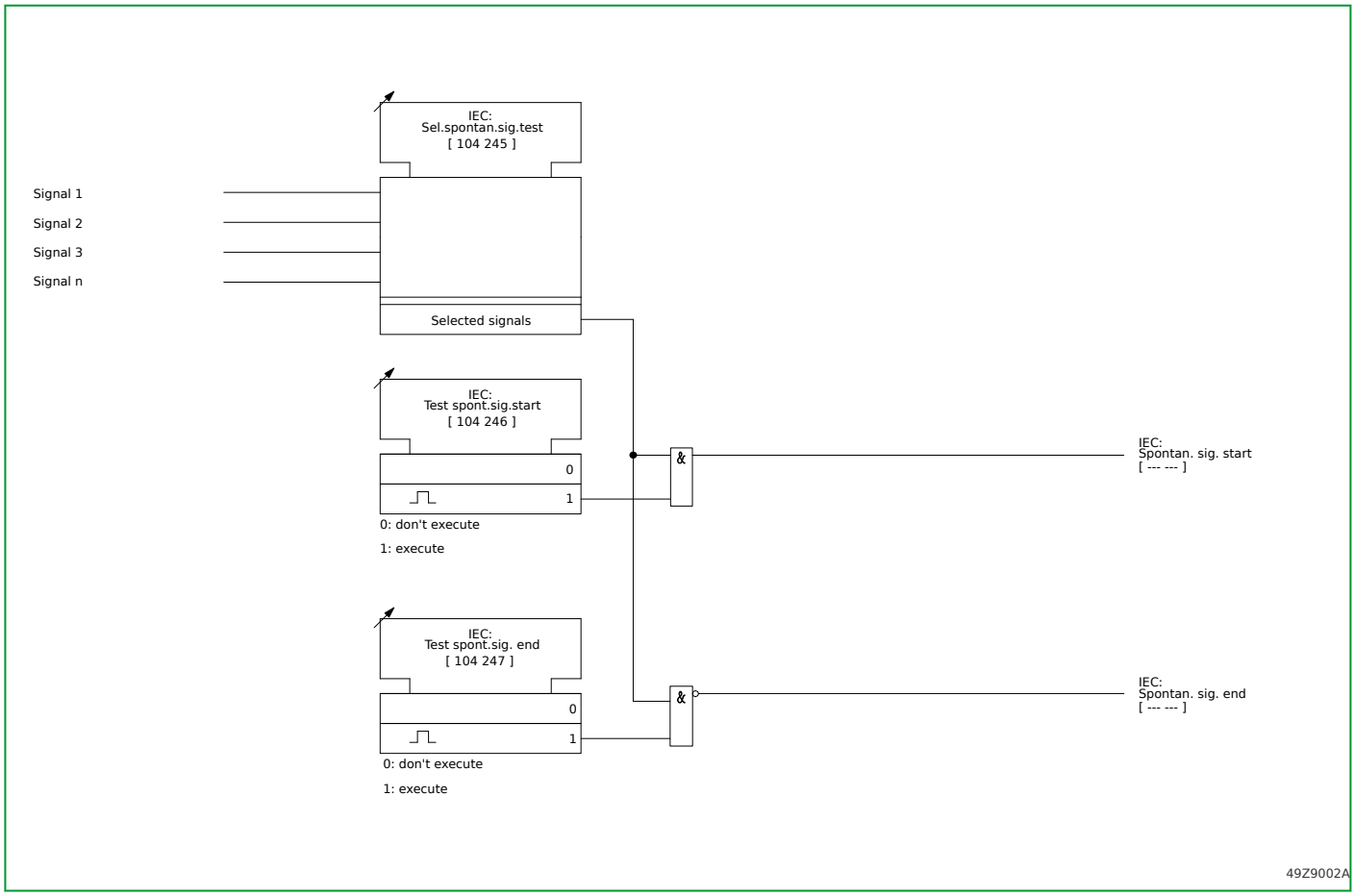

Fig. 3-26: IEC – Checking spontaneous signals.

3.5.4.3.2 Checking Switchgear Contact Positions and Signals

When checking during test operations with the interface protocols based on IEC 61850 it is possible to trigger signals (SIG) and contact positions (DEV) from the control part.

The following parameters are available:

- (104 248) IEC: Sel. pos. DEV test

  Selection possibilities:
  - *Not assigned*
  - DEV01 ... DEVxx
- (104 249) IEC: Test position DEV

  Selection possibilities:
  - *don't execute*
  - *execute open*
  - *execute close*
  - *execute intermed.*

3.5.4.4 Communication Interface (Function Group GOOSE)

For high priority exchange of information between individual devices (IEDs) in a local network, the P633 provides the function group GOOSE as defined in the standard IEC 61850. GOOSE features high-speed and secure transmission of information for reverse interlocking, decentralized substation interlock, trip commands, blocking, enabling, contact position signals and other signals.

GOOSE Messages are only transmitted by switches but not by routers. GOOSE messages therefore remain in the local network to which the P633 is connected.

This function group is only visible if IEC: IEC 61850 enable is set to Yes. After having configured the GOOSE: Function group GOOSE, all parameters associated to this function group are then visible and ready to be configured.

Further setting parameters from function group GOOSE are set with the IED Configurator, but they cannot be modified from the local control panel (MMI) or with the operating program.

The function can then be enabled or disabled by setting GOOSE: General enable USER.

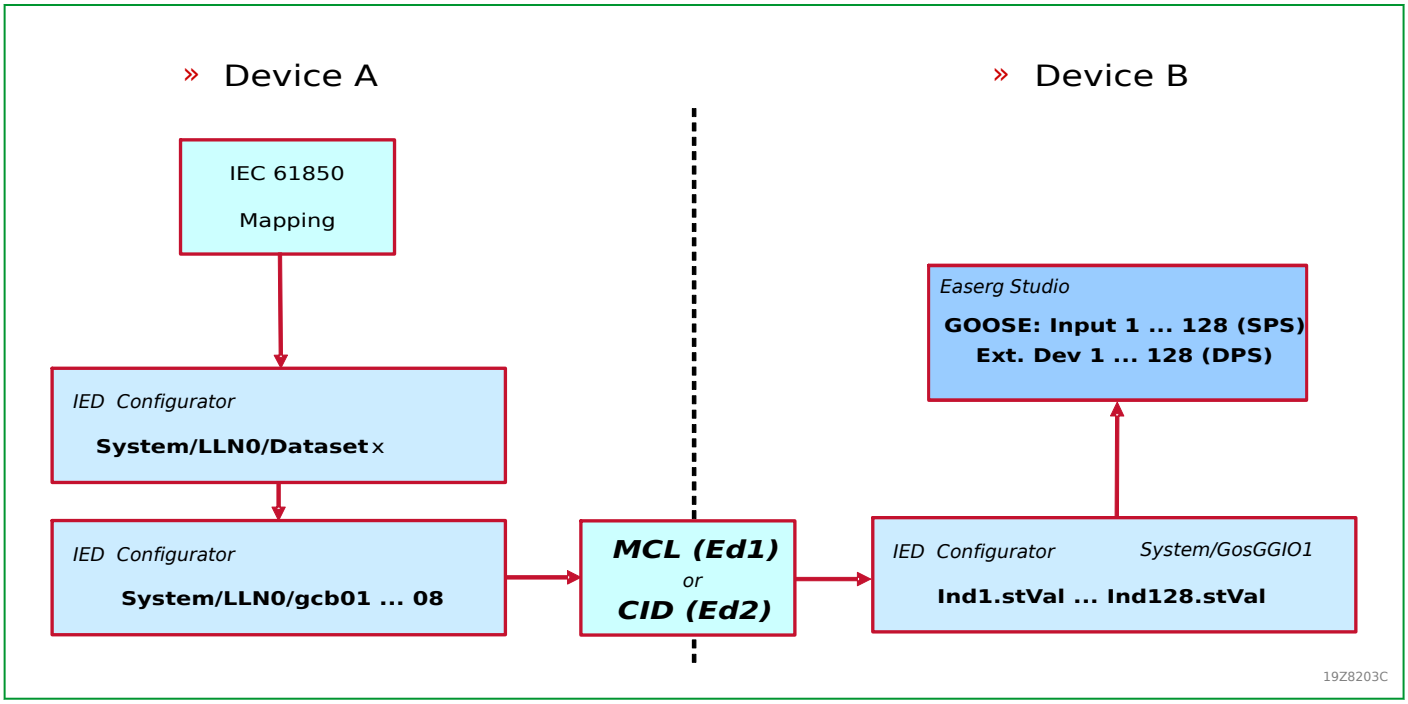

Fig. 3-27: GOOSE configuration.

3.5.4.4.1 Sending GOOSE

The GOOSE can send up to 8 different GOOSE messages which are managed in 8 GOOSE Control Blocks (gcb01 to gcb08). Information content depends on the respective dataset assigned to GOOSE. The maximum size of a dataset to be sent by GOOSE is limited to 1500 bytes. A control display is shown by the IED Configurator to check this limit.

> *It is not possible to read the IEC configuration back from the P633 if the "Dataset" sizes exceed the GOOSE size limit significantly. Therefore it is recommended to limit the "Dataset" size(s) to 100% of the GOOSE capacity. Too large a dataset can spoil IEC 61850 communication. Hence, the dataset size limit of 100% of the GOOSE capacity should not be exceeded, neither for GOOSE nor for reports.*

When defining the datasets for GOOSE it is advised to select the individual data attributes and not the overlapping data objects. By this the amount of data is kept within a limit and decoding is guaranteed on the receiving end.

When a state change occurs with a selected state signal or a measured value changes which is greater than the dead band set for the relevant data point then the complete GOOSE is sent. There will be multiple send repetitions at ascending time periods. The first send repetition occurs at the given cycle time set with the parameter [IC]: Minimum Cycle Time. The cycles for the following send repetitions result from a conditional equation with the increment set with the parameter [IC]: Increment. Should no further state changes occur up to the time when the maximum cycle time has elapsed [IC]: Maximum Cycle Time, then GOOSE will be sent cyclically at intervals as set for the maximum cycle time.

In order to have unambiguous identification of a GOOSE sent, characteristics such as [IC]: Multicast MAC Address, [IC]: Application ID (hex), [IC]: VLAN Identifier (hex), [IC]: VLAN Priority and [IC]: GOOSE Identifier must be entered in the *IED Configurator* settings. Further characteristics are [IC]: Dataset Reference and [IC]: Configuration Revision.

Each GOOSE is given the state change index and the number of send repetitions.

3.5.4.4.2 Receiving GOOSE

With GOOSE up to 128 logic binary state signals as well as 128 two-pole contact position signals from external devices (Ext.Devxx) can be received. For each state signal or contact position signal to be received a specific GOOSE message is to be selected, which will contain the information wanted, by setting [IC]: Multicast MAC Address, [IC]: Application ID (hex), [IC]: Source Path, [IC]: GOOSE Identifier and [IC]: DataSet Reference. With the further setting of [IC]: Data Obj Index / Type, which corresponds to the GOOSE position index and the information structure of the sending device, the required information from the chosen GOOSE will be selected. The identification features "VLAN identifier" and [IC]: Configuration Revision that are also included in the GOOSE received will not be evaluated.

These parameters characterizing the information may be taken either from device or project planning documentation of the sending device or from a configuration file which is conform to IEC 61850. The *IED Configurator* will support the import of .IID, .SCD, .MCL (Ed1) and .CID (Ed2) files when the "browse function" (virtual key) is applied. The selection and acceptance of parameters from an existing project planning is distinguished by a simplified and very reliable data input.

Each GOOSE includes time information on the duration of validity of its information. This corresponds to the double time period to the next GOOSE repetition. If the duration of validity has elapsed without having received this GOOSE again (i.e. because of a fault in communications), the signals received will automatically be set to their respective default value [IC]: Default Input Value. Which of the possible state values will set the wanted security grade is dependent on the relevant application.

The following configuration (shuttling to the device functions) of the logic state signals received from the logic node GosGGIO1 (GOOSE: Input 1 fct.assig. (or Input 2, ..., Input 128)) is made on the basis of the selection table of the binary signal inputs (opto-coupler inputs).

3.5.4.4.3 Uniqueness of Control within a System

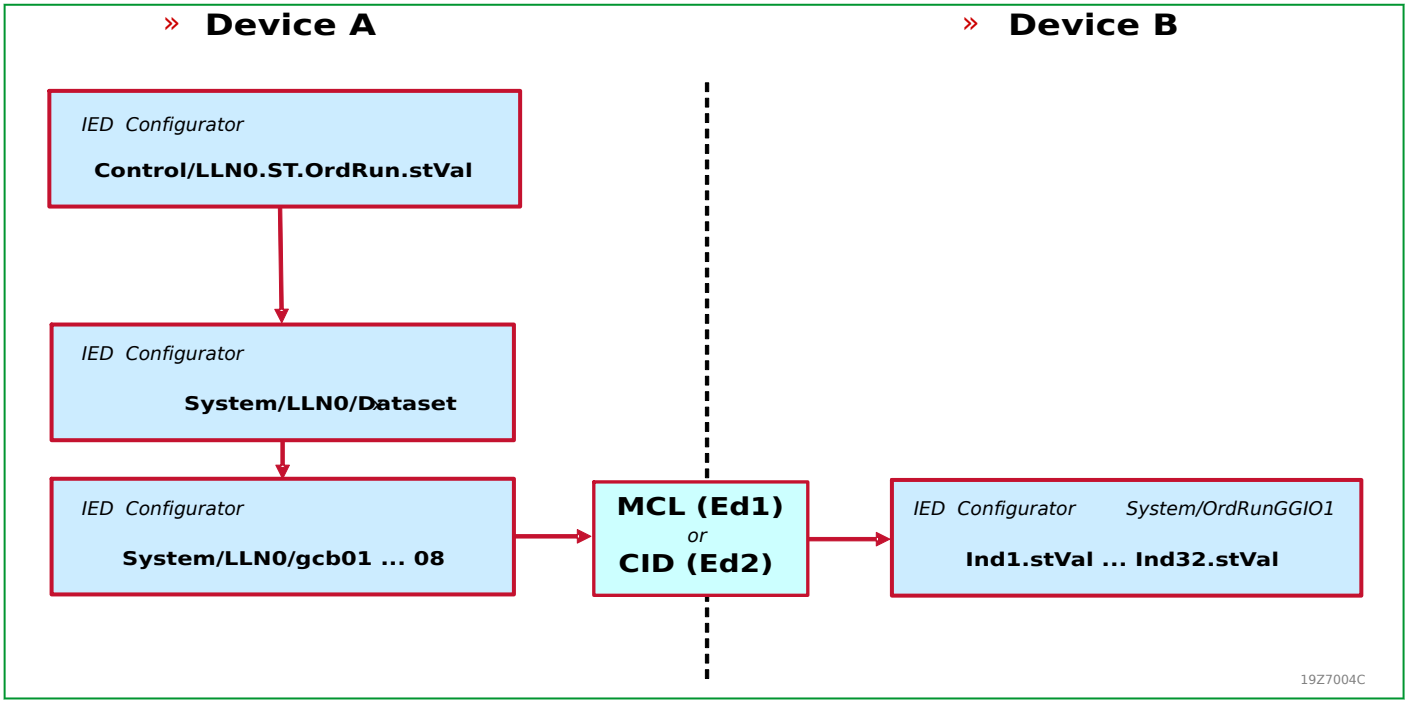

Fig. 3-28: Uniqueness of Control.

If with a system application it must be ensured that only one control command at a time is being processed system wide (“uniqueness”) then interlocking of secondary devices among themselves is setup with GOOSE. The P633 sets the status information Control/LLN0.ST.OrdRun.stVal. when it has received a control command. This information – stored in a dataset – is distributed in the system by GOOSE and is therefore available to all other devices as an interlocking condition. The state information is reset and accordingly signaled after termination of the command sequence.

The P633 is capable to monitor the command status of up to 32 further devices. With the *IED Configurator* OrdRunGGIO1.ind1.stVal to OrdRunGGIO1.ind32.stVal are configured in a similar way to the other GOOSE inputs. A shuttling to the interlocking equations is not necessary as their consideration within command checking is automatically enabled when the first binary signal input is configured. During a signaling receipt phase command effecting will be rejected.

3.5.4.5 Virtual Inputs (Function Group VINP)

This function group is only visible if IEC: IEC60870-5-104enable is set to Yes.

This functional group includes 64 virtual inputs and is intended to process binary information from the Ethernet module running with protocol IEC 60870-5-104. These inputs may be used e.g. in logic functions, signals or displayed on LEDs by assigning it to functions in Config. Parameters/VINP.

On Ethernet module, any binary information available may be mapped to these inputs. This may be status information of the module or any information received over a IEC 60870-5-104 connection.

The current state of the virtual inputs is visible under Operation/Phys. state signals/VINP.

The quality of the virtual inputs is visible under Operation/Log. state signals/VINP. The signal Input xx faulty is set to Yes if the quality “invalid” or “not topical” is set on the Ethernet module side.

3.6 IRIG-B Clock Synchronization (Function Group IRIGB)

If, for example, a GPS receiver with IRIG-B connection is available, the internal clock of the P633 can be synchronized to run on GPS time using the optional IRIG-B interface. It should be noted that the IRIG-B signal holds information on the day only (day of the current year). Using this information and the year set at the P633, the P633 calculates the current date (DD.MM.YY).

Disabling and Enabling the IRIG-B Interface

The IRIG-B interface can be disabled or enabled using a setting parameter.

Synchronization Readiness

If the IRIG-B interface is enabled and receiving a signal, the P633 checks the received signal for plausibility. Implausible signals are rejected by the P633. If the P633 does not receive a correct signal in the long run, synchronization will not be ready any longer.

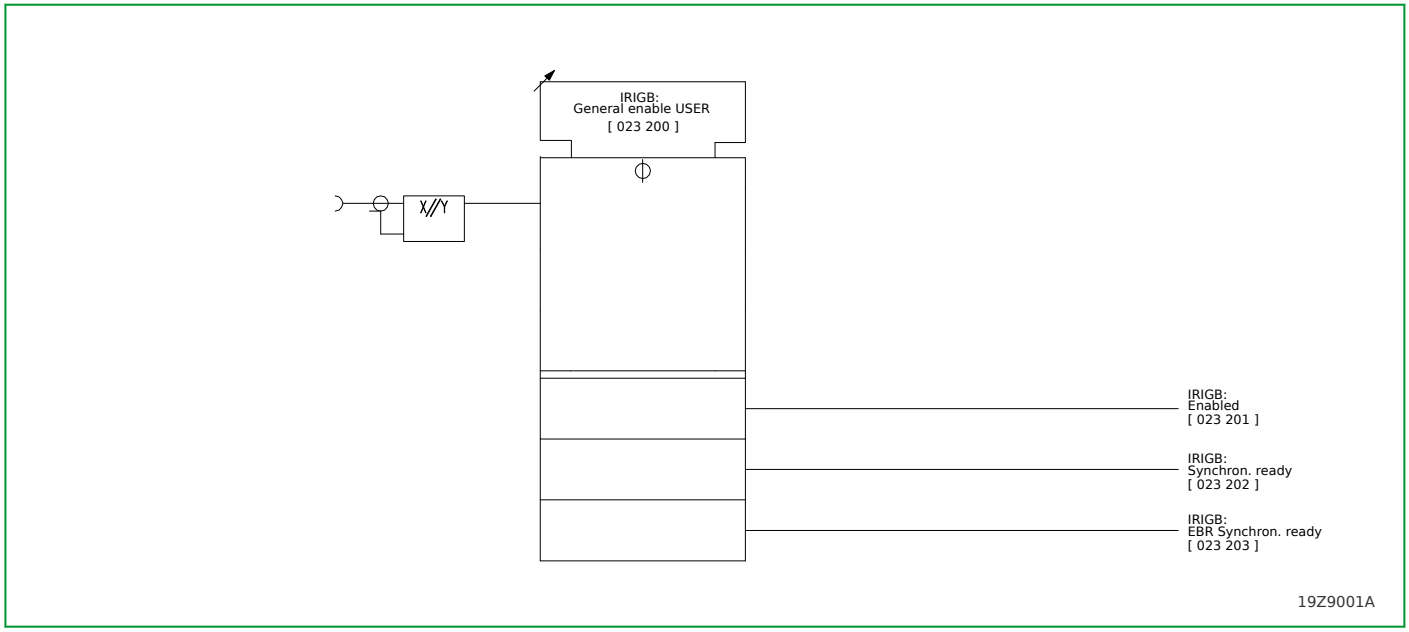

Fig. 3-29: IRIG-B interface.

3.7 Configurable Function Keys (Function Group F_KEY)

The P633 provides six freely configurable function keys. A password may be configured for each function key (e.g. for F1 at F_KEY: Password funct.key 1), and if a password has been configured then the respective function key will only be enabled when the configured password is entered.

As an example the operation of function key F1 is shown in Fig. 3-30, (p. 3-53). After the password has been entered the function key will remain active for the time period set at F_KEY: Return time fct.keys. Thereafter, the function key is disabled until the password is entered again. The same is valid for function keys F2 to F6. Exception: If a function key is configured as a control key a password request is only issued when the function “Local/Remote switching” has been assigned to this function key.

Configuration of function keys with a single function

One function may be assigned to each function key (e.g. for F1) at F_KEY: Fct. assignm. F1 by selecting a logic state signal (except LOC: Trig. menu jmp 1 EXT and LOC: Trig. menu jmp 2 EXT). The assigned function is triggered by pressing the respective function key on the P633.

Configuration of function keys with menu jump lists

Instead of a single function each function key may have one of the two menu jump lists assigned (e.g. for F1) at F_KEY: Fct. assignm. F1 by selecting the listing at LOC: Trig. menu jmp 1 EXT or LOC: Trig. menu jmp 2 EXT. The functions of the selected menu jump list are triggered in sequence by repeated pressing of the assigned function key.

Both menu jump lists are assembled at LOC: Fct. menu jmp list 1 or LOC: Fct. menu jmp list 2. Up to 16 functions such as setting parameters, event counters and/or event logs may be selected.

> *LED indicators including the six positioned directly next to the function keys are configured independently and in this respect there is no relationship to the respective function key configuration.*

Configuration of the READ key

As with LOC: Fct. menu jmp list 1 or LOC: Fct. menu jmp list 2 up to 16 functions may also be selected from the same menu jump list at LOC: Fct. read key. They are triggered in sequence by repeated pressing of the “READ” key.

Configuring function keys as control keys

Each function key may be configured as a control key by selecting one of the functions at (e.g. for F1) F_KEY: Fct. assignm. F1:

- MAIN: Local/Remote key (060 004)
- MAIN: Device selection key (060 001)
- MAIN: Device OPEN key (060 002)
- MAIN: Device CLOSE key (060 003)

These control functions may only be used sensibly if all four of the above commands have been configured thus engaging four of the available six function keys.

Operating mode of the function keys

For each function key the operating mode may be selected (e.g. for F1) at F_KEY: Operating mode F1. Here it is possible to select whether the function key operates as a key or as a switch. In the *Key* operating mode the selected function is active while the function key is pressed. In the *Switch* operating mode the selected function is switched on or off every time the function key is pressed. The state of the function keys can be displayed.

> *Exception: For function keys configured as control keys the operating mode is irrelevant and it is therefore ignored.*

Handling keys

If backlighting for the LC display is switched off it will automatically light up when a function key or the "READ" key is pressed. The assigned function will only be triggered when the respective key is pressed a second time. This is also valid for the other keys.

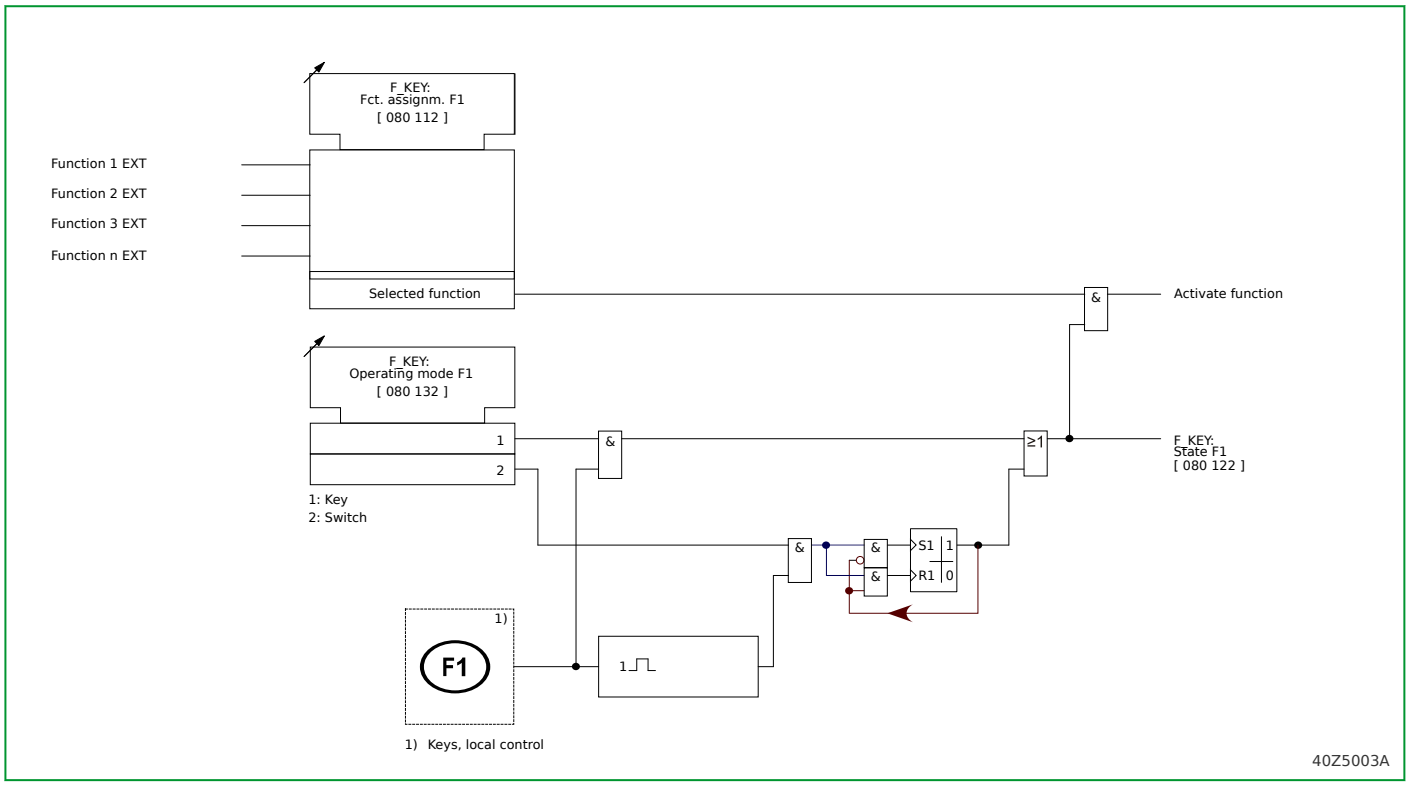

Fig. 3-30: Configuration and operating mode of function keys. The assigned function is either a single function or a menu jump list.

3.8 Configuration and Operating Mode of the Binary Inputs (Function Group INP)

The P633 has opto coupler inputs for processing binary signals from the substation. The functions that will be activated in the P633 by triggering these binary signal inputs are defined by the configuration of the binary signal inputs. In order to ensure that during normal operation the P633 will recognize an input signal, the input signal must persist for at least 8 ms plus the set filter time (provided that *Active* "*high*", *filt.* or *Active* "*low*", *filt.* has been selected for INP: Oper. mode U xxx).

Configuring the Binary Inputs

One function can be assigned to each binary signal input by configuration. The same function can be assigned to several signal inputs. Thus one function can be activated from several control points having different signal voltages.

It should be noted that time-critical applications such as time synchronization commands should not be mapped to the binary signal inputs of the analog I/O module as these have an increased reaction time due to internal processing.

In this technical manual, it is assumed that the required functions (marked “EXT” in the address description) have been assigned to binary signal inputs by configuration.

Operating Mode of the Binary Inputs

The operating mode for each binary signal input can be defined. The user can specify whether the presence (*Active* "*high*" mode) or absence (*Active* "*low*" mode) of a voltage shall be interpreted as the logic ‘1’ signal. The display of the state of a binary signal input – "low" or "high" – is independent of the setting for the operating mode of the signal input.

Filter Function

An additional filter function may be enabled in order to suppress transient interference peaks at the logic signal inputs (operating modes *Active* "*high*", *filt.* or *Active* "*low*", *filt.*). With this function enabled a status change at the binary logic input is only signaled when the input signal remains at a steady signal level during a set number of sampling steps (sampling step size = period / 20). The number of sampling steps is set at parameter INP: Filter.

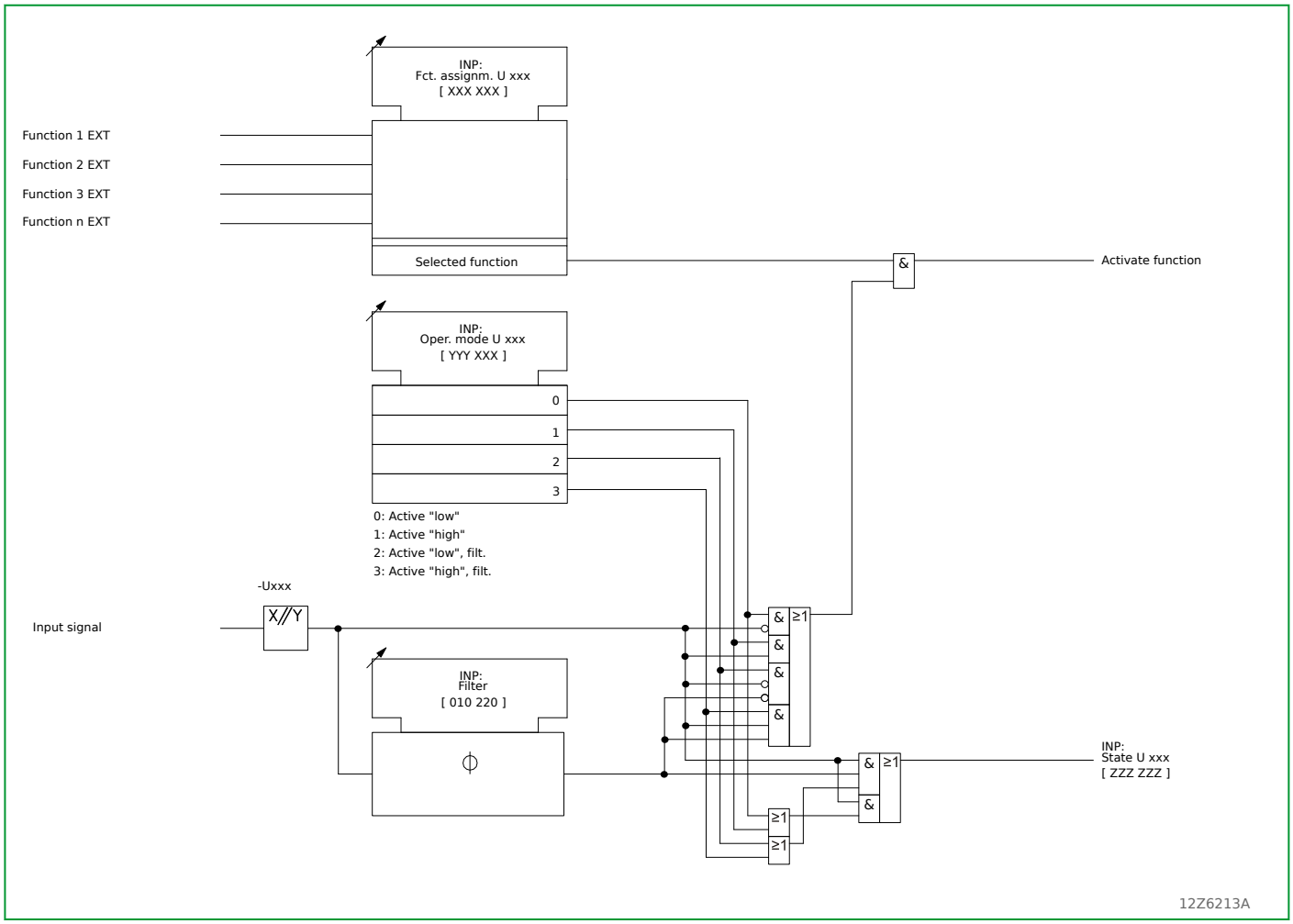

Fig. 3-31: Configuration and operating mode of the binary signal inputs.

3.9 Measured Data Input (Function Group MEASI)

When the P633 is equipped with the analog (I/O) module Y it has two analog inputs available for measured data input. Direct current is fed to the P633 through the 20 mA analog input (input channel 1). The other input is designed for connection of a PT 100 resistance thermometer.

The input current I_{DC} present at the analog (I/O) module Y is displayed as a measured operating value. The current that is conditioned for monitoring purposes ($I_{DC,lin}$) is also displayed as a measured operating value. In addition, it is monitored by the Limit Value Monitoring function to detect whether it exceeds or falls below set thresholds (see Section 3.33, (p. 3-228)).

The measured temperature is also displayed as measured operating value and monitored by the Limit Value Monitoring function to determine whether it exceeds or falls below set threshold (see Section 3.33, (p. 3-228)).

All measured variables are also forwarded to the Thermal Overload Protection function. With this protection it is possible to set whether the PT 100 resistance thermometer or the 20 mA analog input is to be used for the thermal replica (see Section 3.26.1, (p. 3-189)).

Disabling or Enabling the Measured Data Input Function

The Measured Data Input function can be disabled or enabled via setting parameters.

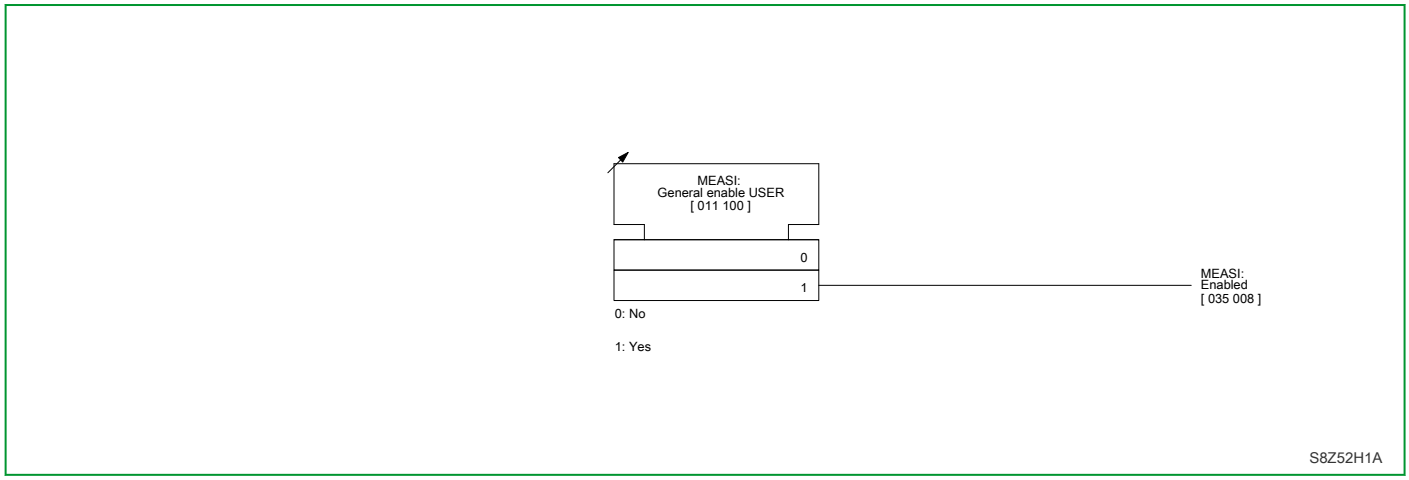

Fig. 3-32: Disabling or enabling the measured data input function.

3.9.1 Direct Current Input on the Analog (I/O) Module Y

External measuring transducers normally supply an output current of 0 to 20 mA that is directly proportional to the physical quantity being measured – the temperature, for example.

If the output current of the measuring transducer is directly proportional to the measured quantity only in certain ranges, linearization can be arranged, provided that the measured data input is set accordingly. Furthermore, for certain applications it may be necessary to limit the range being monitored or to monitor certain parts of the range with a higher or lower sensitivity.

By setting the value pair MEASI: IDC 1 and MEASI: IDC,lin 1, the user specifies which input current I_{DC} will correspond to the current that is monitored by the Limit Value Monitoring function, i.e. $I_{DC,lin}$. (These two setting parameters refer to value pair number 1; setting parameters for value pairs 2 to 20 are available, too.)

The resulting points, called “interpolation points”, are connected by straight lines in an I_{DC}-$I_{DC,lin}$ diagram. In order to implement a simple characteristic, it is sufficient to specify two interpolation points, which are also used as limiting values (see Fig. 3-33, (p. 3-57)). Up to 20 interpolation points are available to implement a complex characteristic.

When setting the characteristic the user must remember that only a rising/rising or falling/falling curve sense is allowed (no peak or vee-shapes). If the setting differs, the signal SFMON: Invalid scaling IDC will be generated.

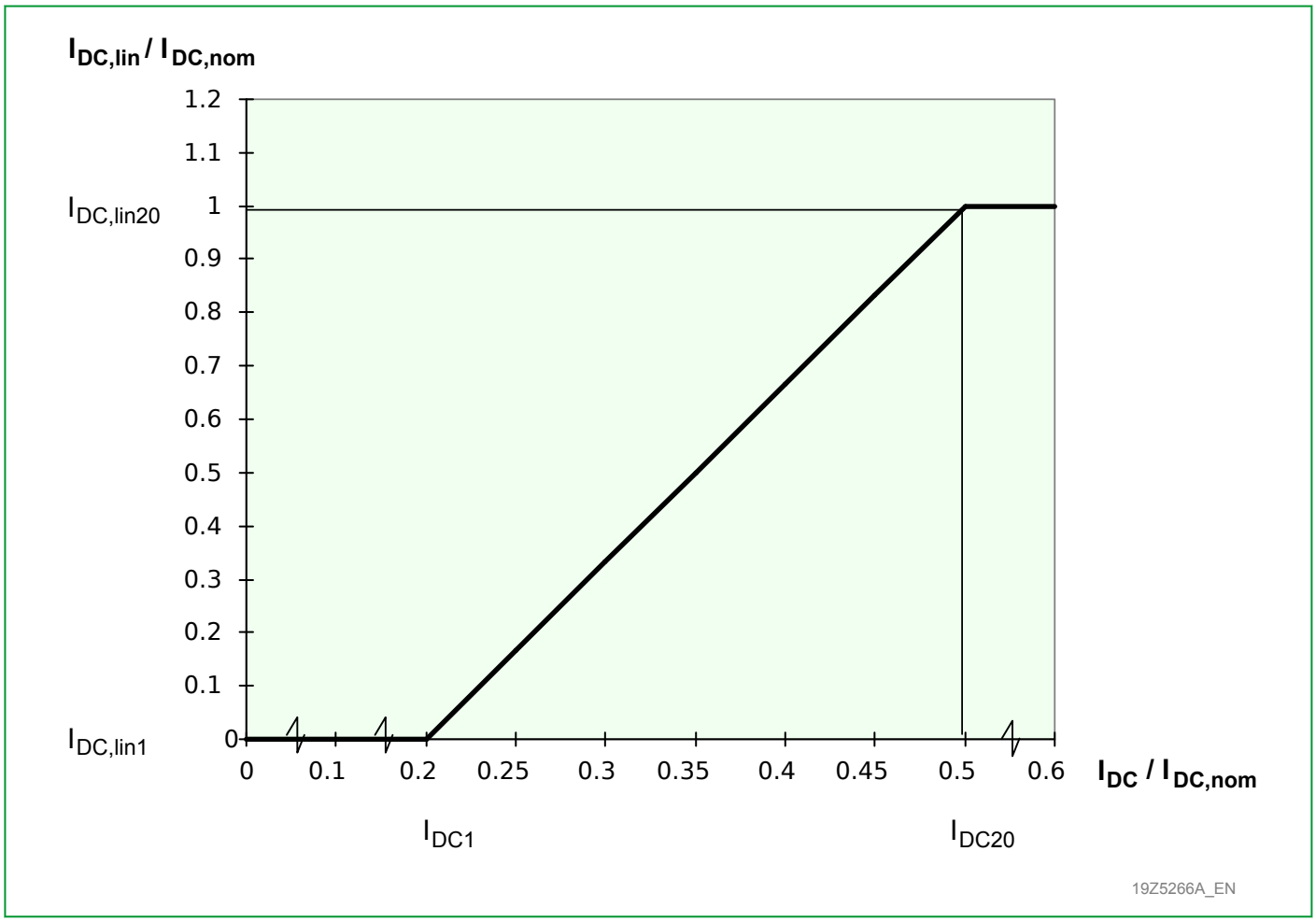

Fig. 3-33: Example of the conversion of 4 to 10 mA input current to 0 to 20 mA monitored current, IDC,lin.

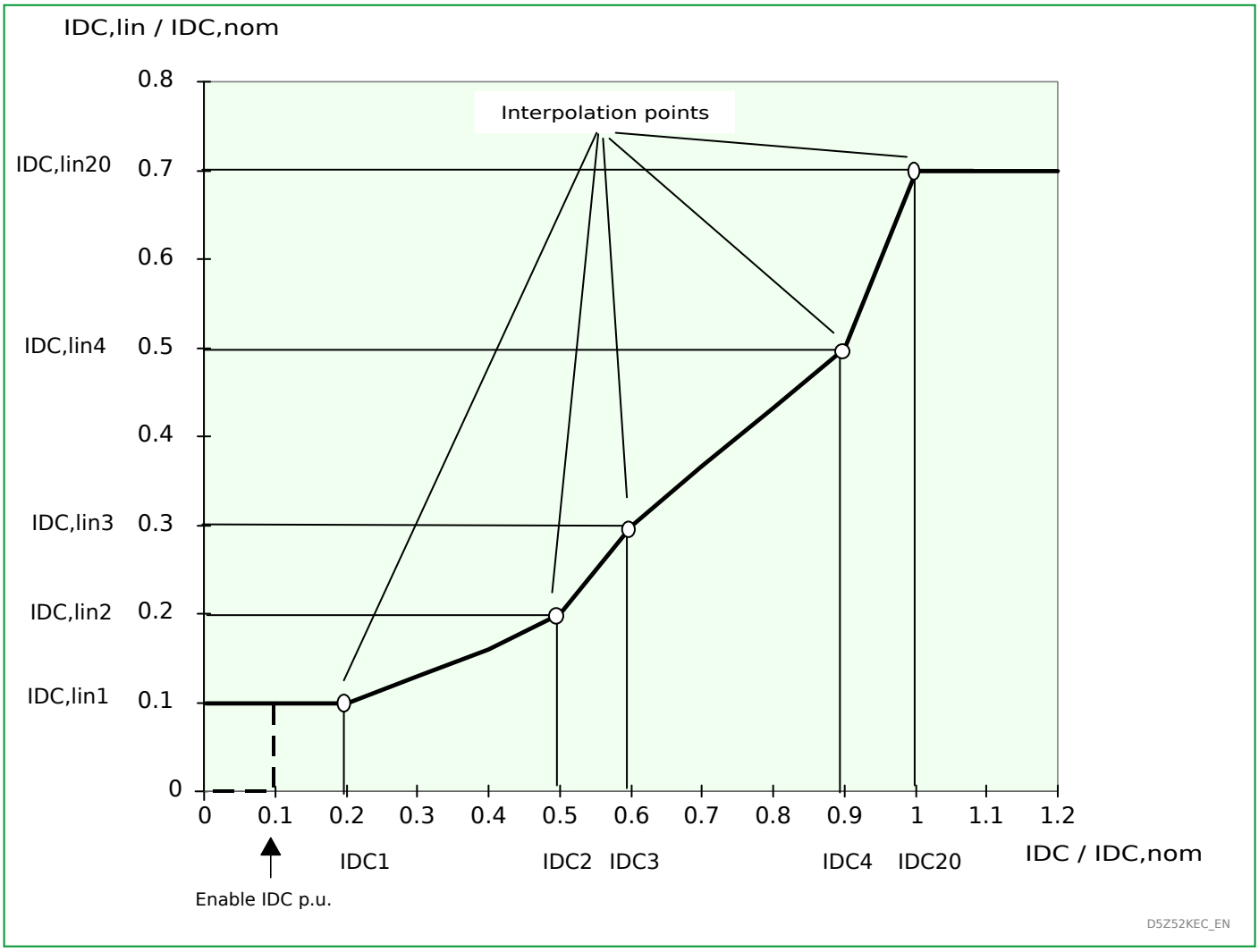

Fig. 3-34: Example of a characteristic with five interpolation points (characteristic with zero suppression setting of 0.1 $I_{DC,nom}$ is shown as a broken line).

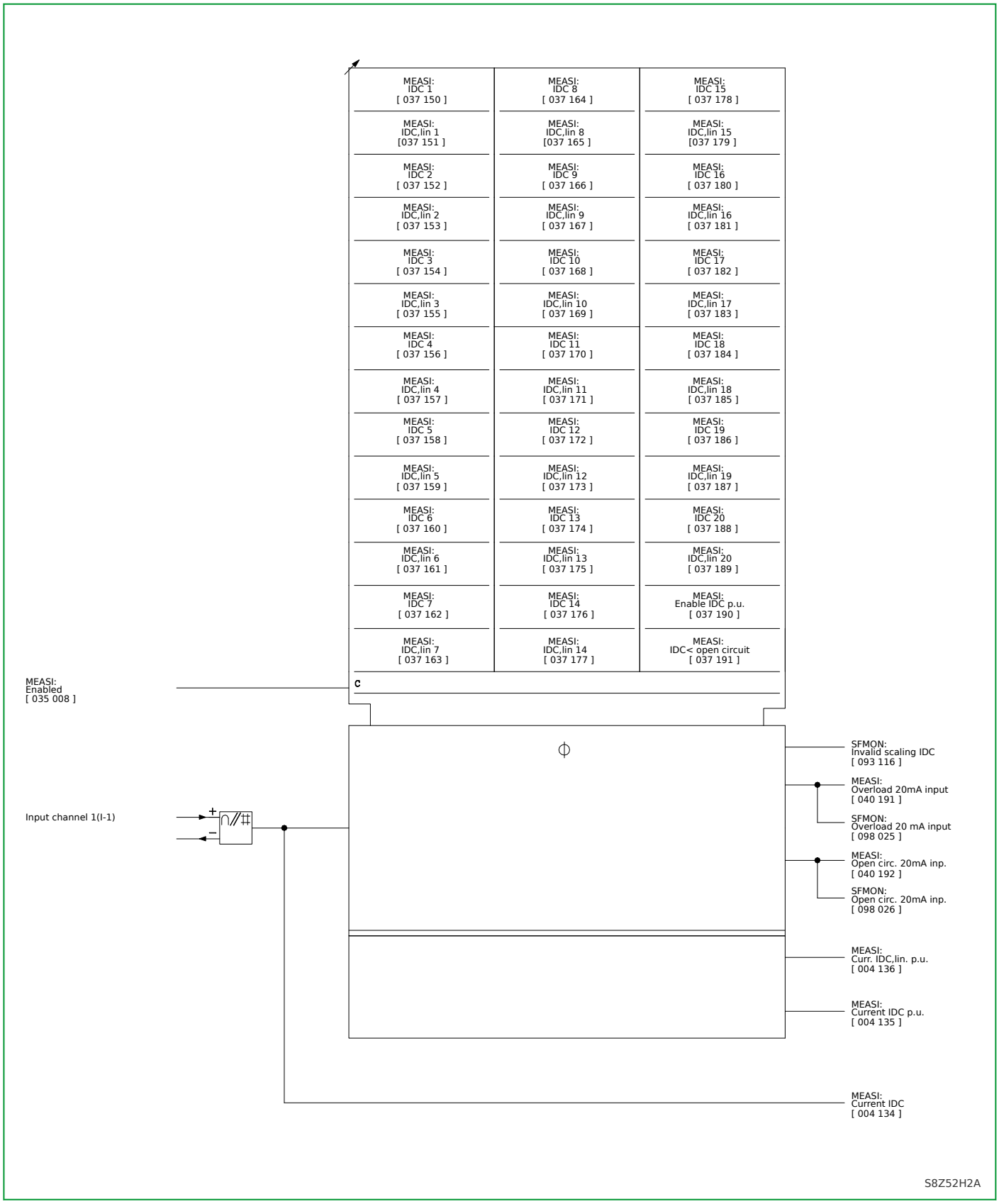

Fig. 3-35: Analog direct current input.

Beyond the linearization described above, the user has the option of scaling the linearized values. Thereby negative values, for example, can be displayed as well and are available for further processing by protection functions.

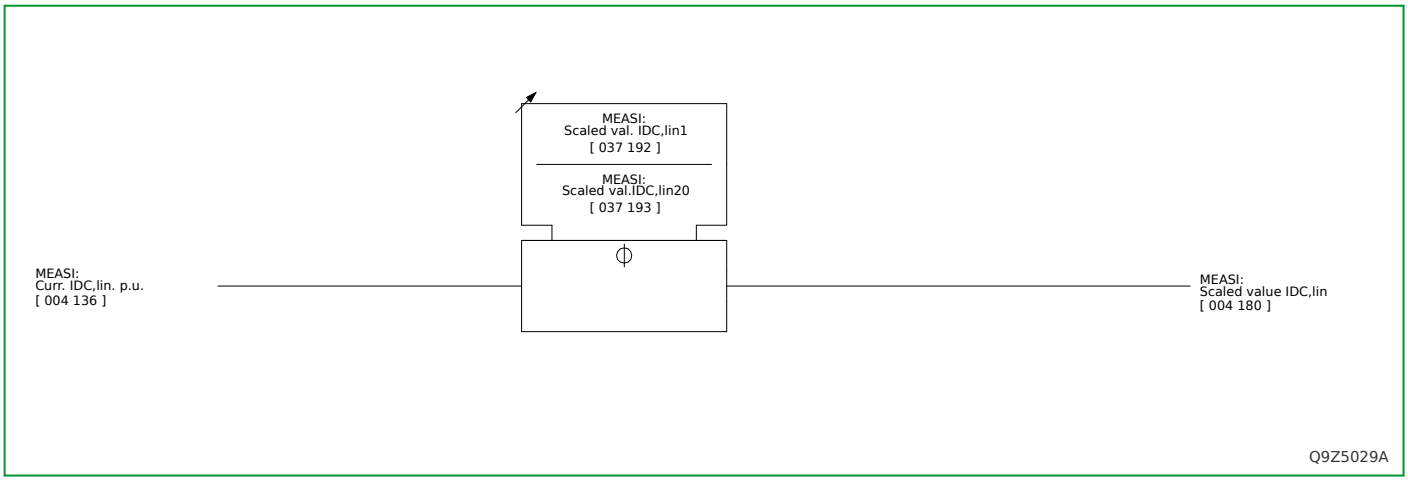

Fig. 3-36: Scaling of the linearized measured value.

3.9.1.1 Zero Suppression

Zero suppression is defined by setting MEASI: Enable IDC p.u. If the direct current does not exceed the set threshold, the per-unit input current $I_{DC\ p.u.}$ and the current $I_{DC,lin}$ will be displayed as having a value of "*0*".

3.9.1.2 Open-Circuit and Overload Monitoring

The P633 is equipped with an open-circuit monitoring function. If current I_{DC} falls below the set threshold MEASI: IDC< open circuit, the signal MEASI: Open circ. 20mA inp. is issued.

The input current is monitored in order to protect the 20 mA analog input against overloading. If it exceeds the set threshold of 24.8 mA, the signal MEASI: Overload 20mA input is issued.

3.9.2 Input for Connection of a Resistance Thermometer

This input is designed to connect a PT 100 resistance thermometer. The mapping curve, R = f(T), of PT 100 resistance thermometers is defined in the IEC 751 standard. If the PT 100 resistance thermometer is connected using the 3-wire method, then no further calibration is required.

Open-Circuit Monitoring

If there is an open measuring circuit due to a broken wire, the signal SFMON: PT100 open circuit is issued.

Maximum Temperature Value Since the Last Reset

The result of a temperature measurement cannot only be read out as a direct measured value (temperature T) or as a normalized value (temperature norm. T), but also as the maximum value since the last reset (temperature Tmax).

For this the following menu points are available:

- MEASI: Temperature Tmax (maximum temperature value)
- MEASI: Reset Tmax EXT (reset via a binary signal)
- MEASI: Reset Tmax USER (manual reset)

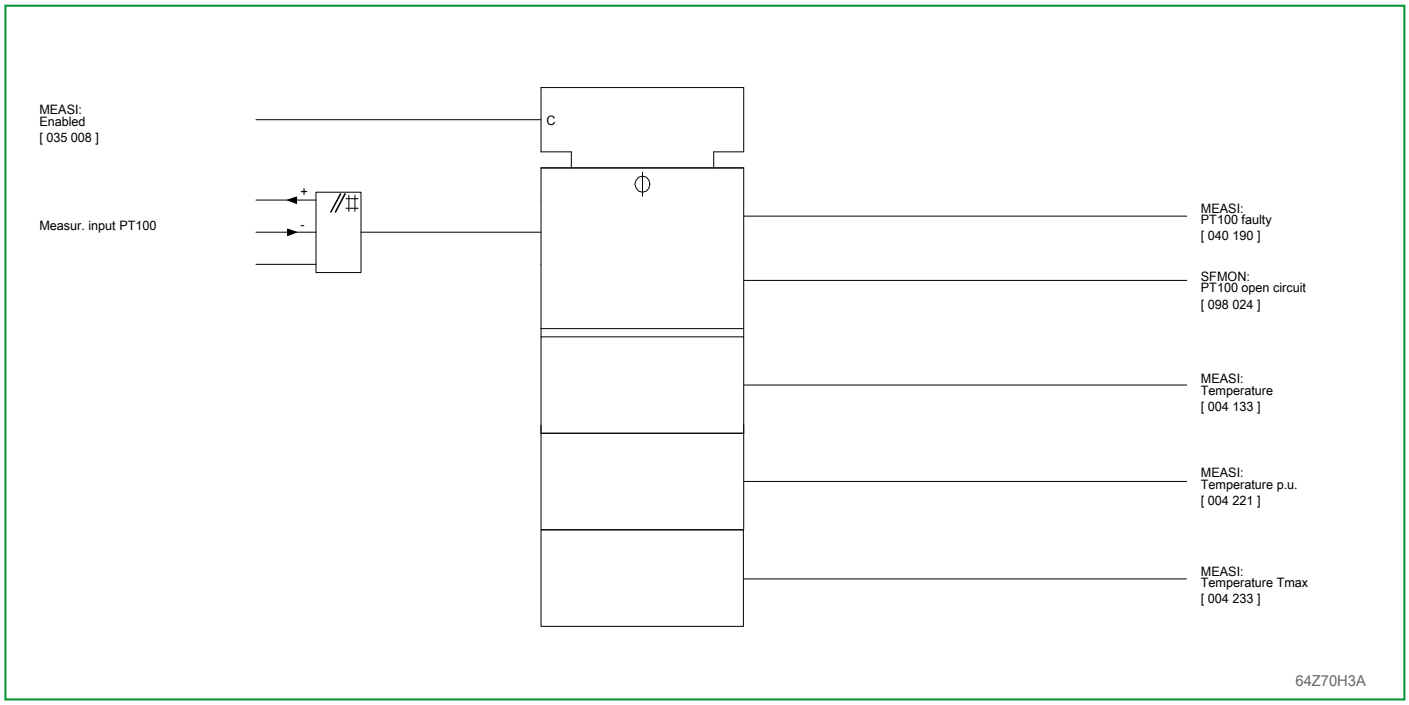

Fig. 3-37: Temperature measurement with a resistance thermometer

3.10 Configuration, Operating Mode, and Blocking of the Output Relays (Function Group OUTP)

The P633 has output relays for the output of binary signals. The binary signal assignment is freely configurable by the user.

3.10.1 Configuration of the Output Relays

One binary signal can be assigned to each output relay. The same binary signal can be assigned to several output relays by configuration.

3.10.2 Operating Mode of the Output Relays

The user can set an operating mode for each output relay that determines whether the output relay operates in a normally open arrangement (NO) or normally closed arrangement (NC) and whether it operates in latching mode. Depending on the selected operating mode, latching can be disabled, either manually using a setting parameter or by an appropriately configured binary signal input at the start of a new fault, signalized by the onset of a general starting, or of a new system disturbance.

3.10.3 Blocking the Output Relays

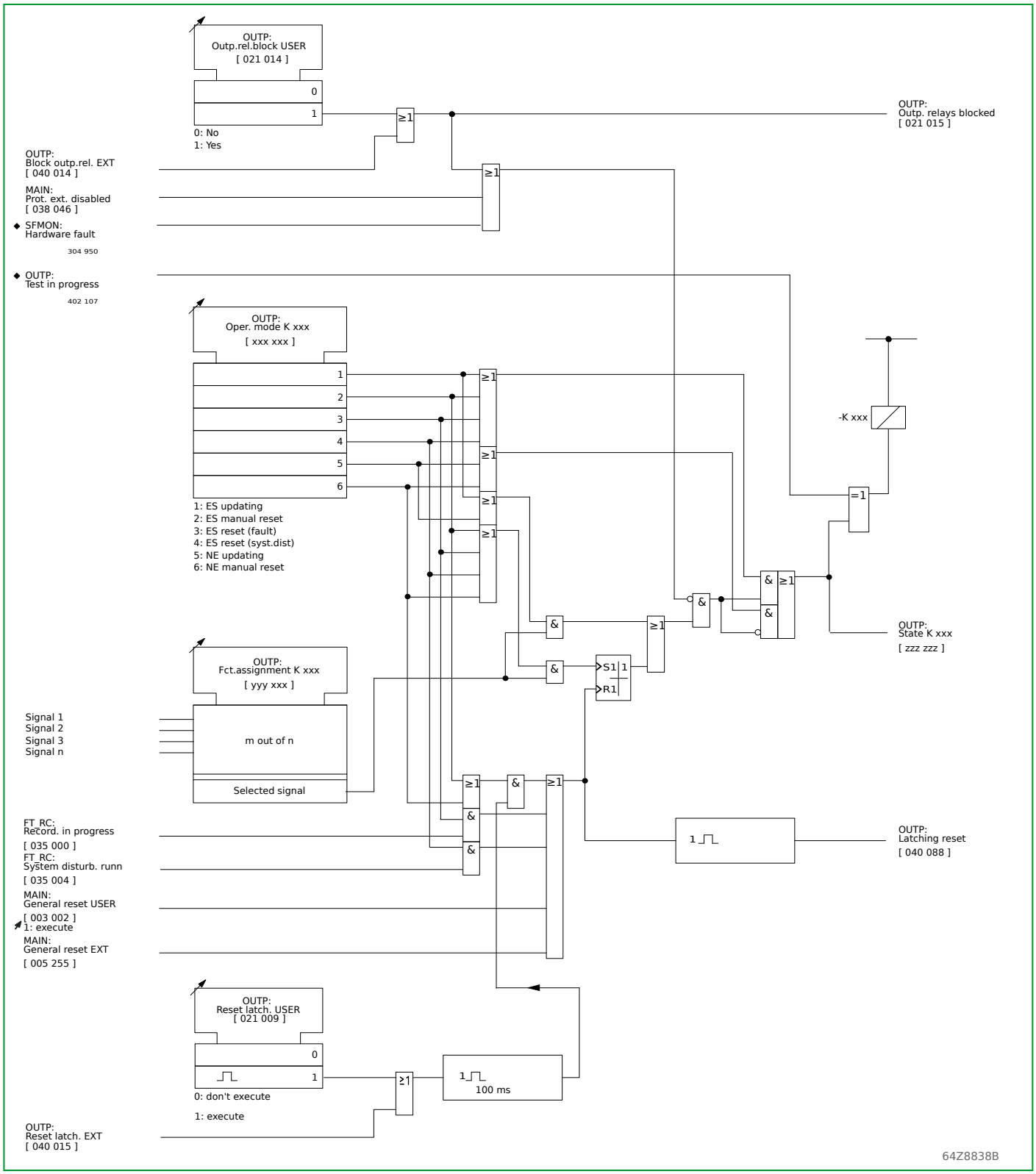

Fig. 3-38: Configuration, setting the operating mode, and blocking the output relays.

The P633 offers the option of blocking all output relays via setting parameters or by way of an appropriately configured binary signal input. The output relays are likewise blocked if the P633 is disabled via appropriately configured binary inputs or if self-monitoring detects a hardware fault. Any output relay configured for MAIN: Blocked/faulty will not be included in the blocking signals.

If the self-monitoring detects a serious hardware fault (see those error messages in Chapter 11, (p. 11-1), which lead to a blocking of the protection), all output relays are reset regardless of the set operating mode or signal configuration.

3.10.4 Testing the Output Relays

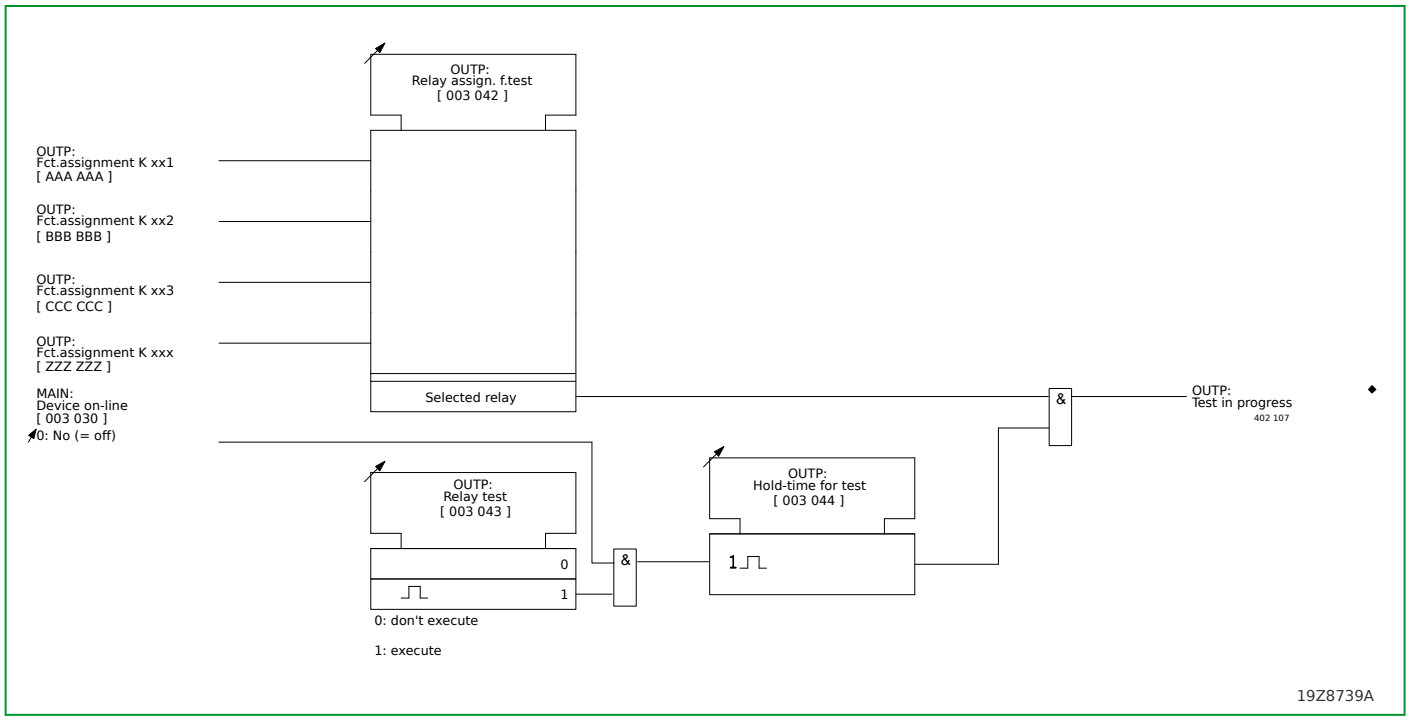

Fig. 3-39: Testing the output relays.

For testing purposes, the user can select an output relay and trigger it via setting parameters. At the time when the test is triggered the P633 must be switched to “off-line”. Triggering persists for the duration of the set hold time.

3.11 Measured Data Output (Function Group MEASO)

Measurands made available by the P633 can be provided in BCD (binary coded decimal) form through output relays or in analog form as direct current output. Output as direct current can only occur if the P633 is equipped with analog module Y. BCD output is always possible, whether the P633 is equipped with analog module Y or not.

3.11.1 General Settings

3.11.1.1 Disabling or Enabling the Measured Data Output Function

The Measured Data Output function can be disabled or enabled via setting parameters.

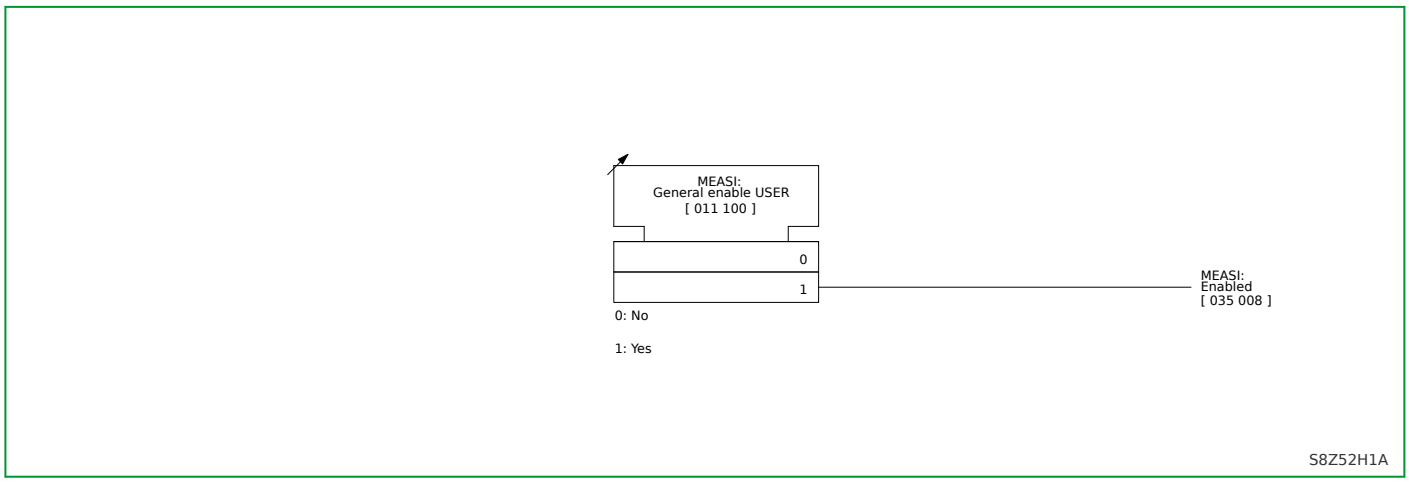

Fig. 3-40: Disabling or enabling the measured data output function.

3.11.1.2 Enabling Measured Data Output

The measured data output can be enabled through a binary signal input, provided that the function MEASO: Outp. enabled EXT has been configured. If the function MEASO: Outp. enabled EXT has not been configured to a binary signal input, then the measured data output is always enabled.

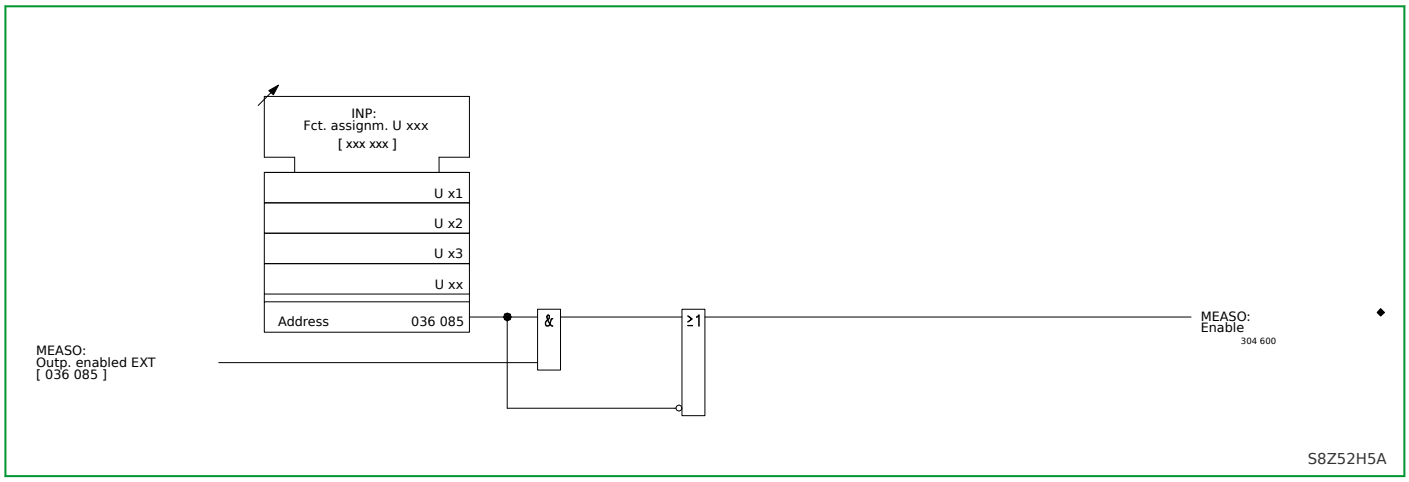

Fig. 3-41: Enabling measured data output.

3.11.1.3 Resetting the Measured Data Output Function

BCD or analog output of measurands is terminated for the duration of the hold time if one of the following conditions is met:

- The measured data output is reset either via a setting parameter or via an appropriately configured binary signal input.
- There is a general reset.
- LED indicators reset

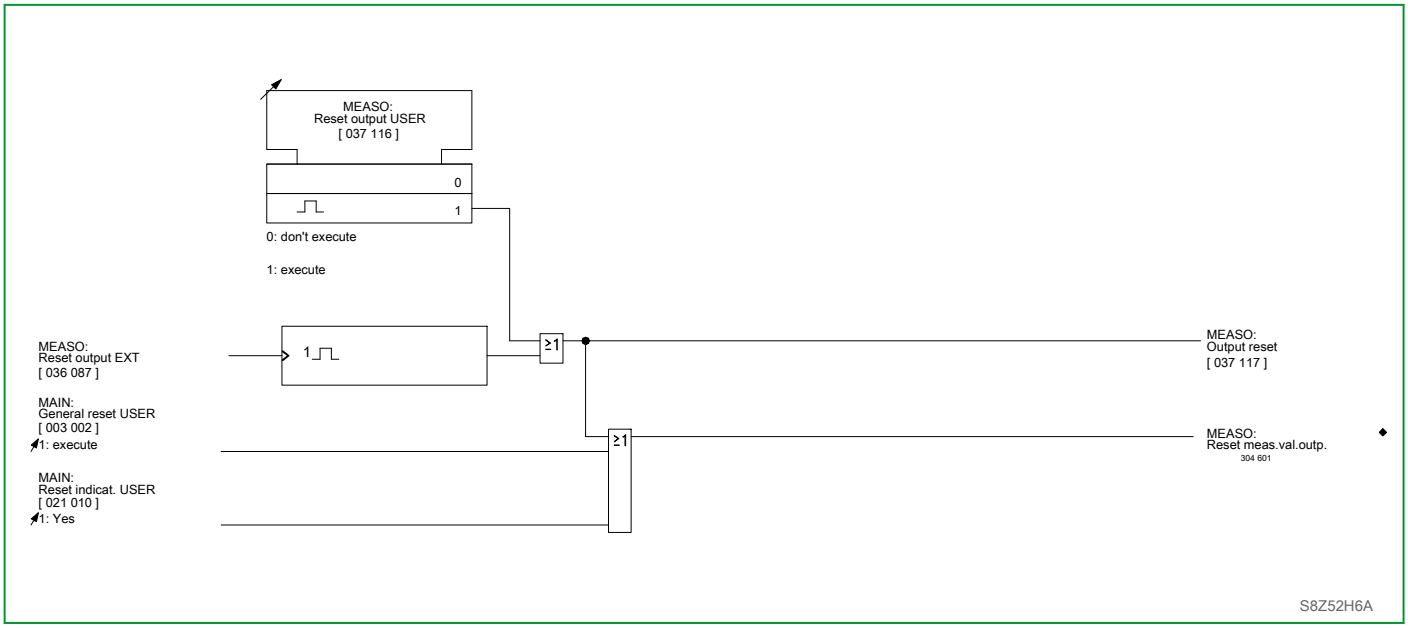

Fig. 3-42: Resetting the measured data output function.

3.11.1.4 Scaling

Scaling is used to map the physical measuring range to the P633 inherent setting range.

Scaling of analog output is also suited for directional-signed output of some fault measurands, in particular fault location in percent.

3.11.2 BCD Measured Data Output

The user can select a measurand for output in BCD form by assigning output relays.

The selected measurand is available in BCD-coded form for the duration of the set hold time MEASO: Hold time output BCD. If the selected variable was not measured, then there is no output of a measurand value.

3.11.2.1 Output of Measured Event Values

If the measured event value is updated during the hold time, the measurand output memory is cleared and the hold time is re-started. This leads to an immediate availability at the output of the updated value.

3.11.2.2 Output of Measured Operating Values

The selected measured operating value is available for the duration of the set hold time. After the hold time has elapsed, the current value is saved and the hold time is re-started. If the hold time has been set to *blocked*, the measured operating value that has been output will be stored until the measured data output function is reset.

3.11.2.3 Scaling of BCD Output

In order to define the resolution for measured data output the measurand range (Mx,min ... Mx,max) in scaled form (as Mx,scal,min ... Mx,scal,max) and the associated BCD display range (BCD,min ... BCD,max) have to be set.

- MEASO: Scaled min. val. BCD
- MEASO: Scaled max. val. BCD
- MEASO: BCD-Out min. value
- MEASO: BCD-Out max. value

The BCD display range should be set so that the value 399 is never exceeded. If this should occur or if the measurand is outside the acceptable measuring range, then the value for "Overflow" (all relays triggered) is transmitted.

Measurands	Range
Measurands of the variable Mx	Mx,RL1 ... Mx,RL2
Associated scaled measurands	0 ... 1

Scaling is made with reference to the complete range of values for the selected measurand (variable Mx). The complete range of values is defined by their end values Mx,RL1 and Mx,RL2. (Mx,RL1 and Mx,RL2 are listed in the operating program under “minimum” and “maximum”.)

Measurands to be output	Range
Measurands to be output	Mx,min. ... Mx,max.
Scaled measurands to be output	Mx,scal,min ... Mx,scal,max with: Mx,scal,min = (Mx,min - Mx,RL1) / (Mx,RL2 - Mx,RL1 Mx,scal,max = (Mx,max - Mx,RL1) / (Mx,RL2 - Mx,RL1
Designation of the set values in the data model	"Scaled min. val. BCD" ... "Scaled max. val. BCD"

Measurands	BCD display values
Measurands in the range "Measurands to be output"	*BCD-Out min. value ... BCD-Out max. value* (*Valid BCD value*)
Measurands: Mx,RL1 = Mx = Mx,min	*BCD-Out min. value* (BCD value not valid)
Measurands Mx: Mx,max = Mx = Mx,RL2	*BCD-Out max. value* (BCD value not valid)
Measurands Mx: Mx < Mx,RL1 or Mx > Mx,RL2	*BCD-Out max. value* (Overflow)

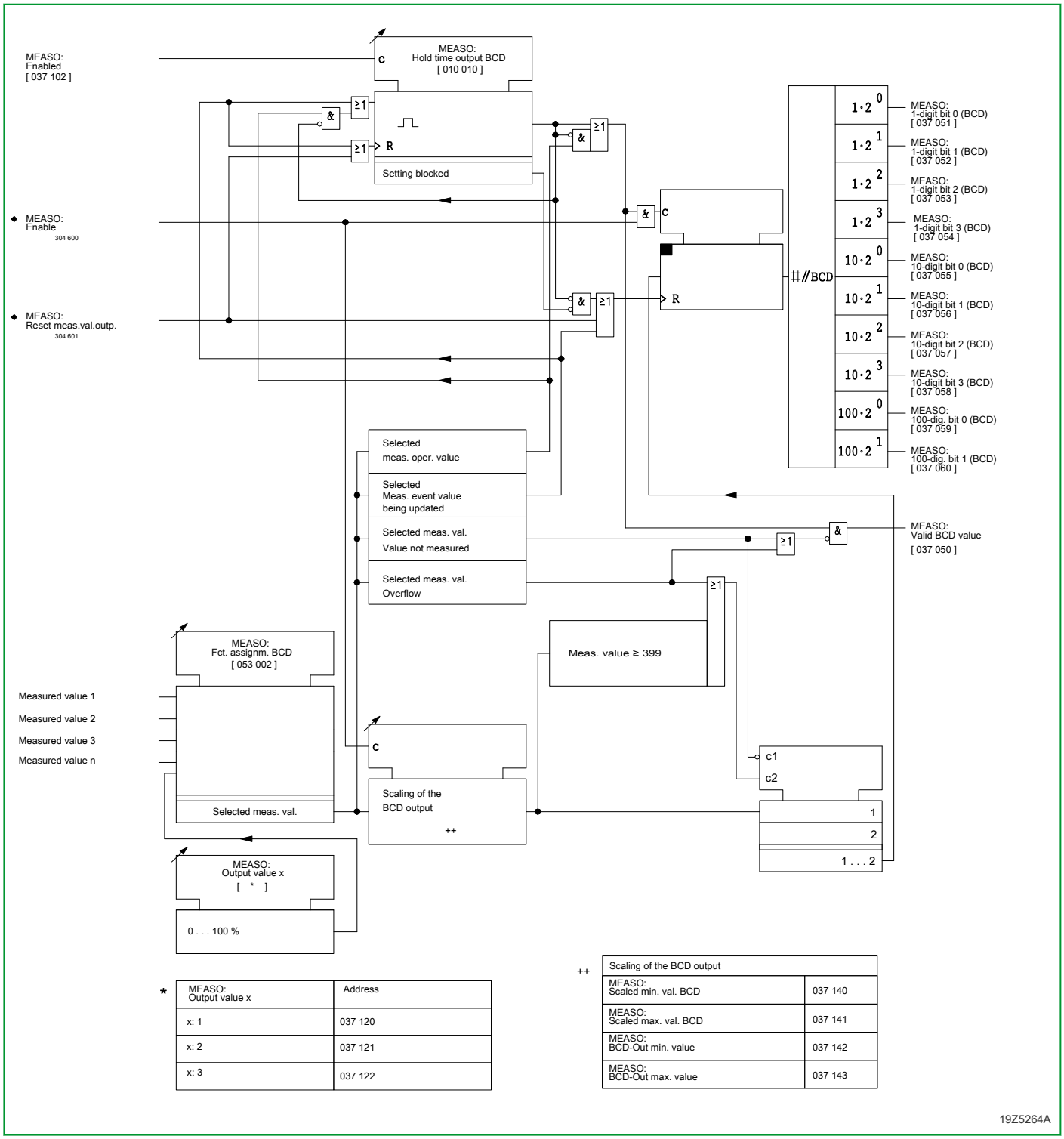

* MEASO: Output value x	Address
x: 1	037 120
x: 2	037 121
x: 3	037 122

++ Scaling of the BCD output	
MEASO: Scaled min. val. BCD	037 140
MEASO: Scaled max. val. BCD	037 141
MEASO: BCD-Out min. value	037 142
MEASO: BCD-Out max. value	037 143

Fig. 3-43: BCD measured data output

3.11.3 Analog Measured Data Output

Analog output of measured data is two-channel.

The user can select two of the measurands available in the P633 for output in the form of load-independent direct current. Three interpolation points per channel can be defined for specific adjustments such as adjustment to the scaling of a measuring instrument. The direct current that is output is displayed as a measured operating value.

The selected measurand is output as direct current for the duration of the set hold time MEASO: Hold time output A-1. If the selected variable was not measured, then there is no output of a measurand value.

3.11.3.1 Output of Measured Event Values

If the measured event value is updated during the hold time, the measurand output memory is cleared and the hold time is re-started. This leads to an immediate availability at the output of the updated value.

3.11.3.2 Output of Measured Operating Values

The selected measured operating value is available for the duration of the set hold time. After the hold time has elapsed, the current value is saved and the hold time is re-started. If the hold time has been set to *blocked*, the measured operating value that has been output will be stored until the measured data output function is reset.

3.11.3.3 Configuration of Output Relays Assigned to the Output Channels

The user must keep in mind that direct current output only occurs when the output relays assigned to the output channels are configured for MEASO: Value A-1 output, since the output channels would otherwise remain short-circuited (see the terminal connection diagrams, Section 5.7, (p. 5-26)).

3.11.3.4 Scaling the Analog Display

In order to define the resolution for measured data output the measurand range in scaled form and the associated display range have to be set. One additional value for the knee point must also be defined. In this way the user can obtain an analog output characteristic similar to the characteristic shown in Fig. 3-44, (p. 3-74).

3.11.3.5 Measurand Range to be Output

The measurand range to be output is (Mx,min ... Mx,knee ... Mx,max), with:

- Mx,min: minimum value to be output
- Mx,knee: Knee-point value for the measurand range to be output
- Mx,max: maximum value to be output

This measurand range to be output is defined by setting the following parameters:

- MEASO: Scaled min. val. A-1 or MEASO: Scaled min. val. A-2, resp.
- MEASO: Scaled knee val. A-1 or MEASO: Scaled knee val. A-2, resp.
- MEASO: Scaled max. val. A-1 or MEASO: Scaled max. val. A-2, resp.

Scaling is made with reference to the complete range of values for the selected measurand (variable Mx). The complete range of values is defined by their end

values Mx,RL1 and Mx,RL2. (Mx,RL1 and Mx,RL2 are listed in the operating program – Easergy Studio – under “minimum” and “maximum”.)

Measurands	Range
Measurands of the variable Mx	Mx,RL1 ... Mx,RL2
Associated scaled measurands	0 ... 1

Measurands to be output	Range
Measurands with knee-point to be output	Mx,min ... Mx,knee ... Mx,max
Scaled measurands with a scaled knee-point to be output	Mx,scal,min ... Mx,scal,knee ... Mx,scal,max with: Mx,scal,min = (Mx,min - Mx,RL1) / (Mx,RL2 - Mx,RL1 Mx,scal,knee = (Mx,knee - Mx,RL1) / (Mx,RL2 - Mx,RL1) Mx,scal,max = (Mx,max - Mx,RL1) / (Mx,RL2 - Mx,RL1
Designation of the set values in the data model	"Scal. min. value Ax" ... ... "Scal. knee-point Ax" ... "Scaled max. val. Ax"

3.11.3.6 Associated Display Range

The associated display range is defined by setting the following parameters:

- MEASO: AnOut min. val. A-1 or MEASO: AnOut min. val. A-2, resp.
- MEASO: AnOut knee point A-1 or MEASO: AnOut knee point A-2, resp.
- MEASO: AnOut max. val. A-1 or MEASO: AnOut max. val. A-2, resp.

Measurands	Analog display values
Measurands in the range "Measurands to be output"	"AnOut min. val. A-x" ... ... "AnOut knee point A-x" ... ... "AnOut max. val." (Value A-x valid)
Measurands: Mx,RL1 = Mx = Mx,min	"AnOut min. val." (Value A-x not valid)
Measurands Mx: Mx,max = Mx = Mx,RL2	"AnOut max. val." (Value A-x not valid)
Measurands Mx: Mx < Mx,RL1 or Mx > Mx,RL2	"AnOut max. val." (Overflow)

3.11.3.7 Example for Scaling of Analog Display Ranges

Voltage A-B is selected as the measurand to be transmitted by channel A-1.

The measuring range is from 0 to 1.5 V_{nom} with V_{nom} = 100 V.

The range to be transmitted is from 0.02 to 1 V_{nom} with the associated display range from 4 mA to 18 mA.

The knee-point of the characteristic is 0.1 V_{nom} with an associated display of 16 mA.

Measurands	Range
Measurands of the variable Mx	0 V ... 150 V
Associated scaled measurands	0 ... 1

Measurands to be output	Range
Measurands with knee-point to be output	2 V ...10 V... 100 V
Associated scaled measurands	0.013 ... 0.067 ... 0.67 with: Mx,scal,min = (2 V - 0 V) / (150 V - 0 V) = 0.013 Mx,scal,knee = (10 V - 0 V) / (150 V - 0 V) = 0.067 Mx,scal,max = (100 V - 0 V) / (150 V - 0 V) = 0.67

Measurands	Analog display values
Measurands in the range "Measurands to be output" 0.02 ... 0.1 V_{nom} ... 1 V_{nom}	4 mA ... 16 mA ... 18 mA

In this example the following P633 settings are selected in the menu branch **Parameter/Config. parameters**:

Address	Description	Current value
056 020	MEASO: Function group MEASO	*With*
031 074	MEASO: General enable USER	*Yes*
053 000	MEASO: Fct. assignm. A-1	MAIN: Voltage V p.u.
010 114	MEASO: Hold time output A-1	*1.00 s*
037 104	MEASO: Scaled min. val. A-1	0.013 (corresponds with *0.02 Vnom)*
037 105	MEASO: Scaled knee val. A-1	0.067 (corresponds with *0.10 Vnom)*
037 106	MEASO: Scaled max. val. A-1	0.667 (corresponds with *1.00 Vnom)*
037 107	MEASO: AnOut min. val. A-1	*4 mA*
037 108	MEASO: AnOut knee point A-1	*16 mA*
037 109	MEASO: AnOut max. val. A-1	*18 mA*

By setting MEASO: AnOut min. val. A-1, the user can specify the output current that will be output when values are smaller than or equal to the set minimum measured value to be transmitted. The setting at MEASO: AnOut max. val. A-1 defines the output current that is output for the maximum measured value to be transmitted. By defining the knee-point, the user can obtain two characteristic curve sections with different slopes. When entering this setting the user must keep in mind that only a rising/rising or falling/falling curve sense is permitted (peaky or vee shapes not allowed). If the setting was not properly entered, the signal SFMON: Invalid scaling A-1 will be issued.

A check of the set characteristic and its acceptance by the P633, if the setting was properly entered, will only occur after the P633 is switched on-line again (with the setting MAIN: Device on-line).

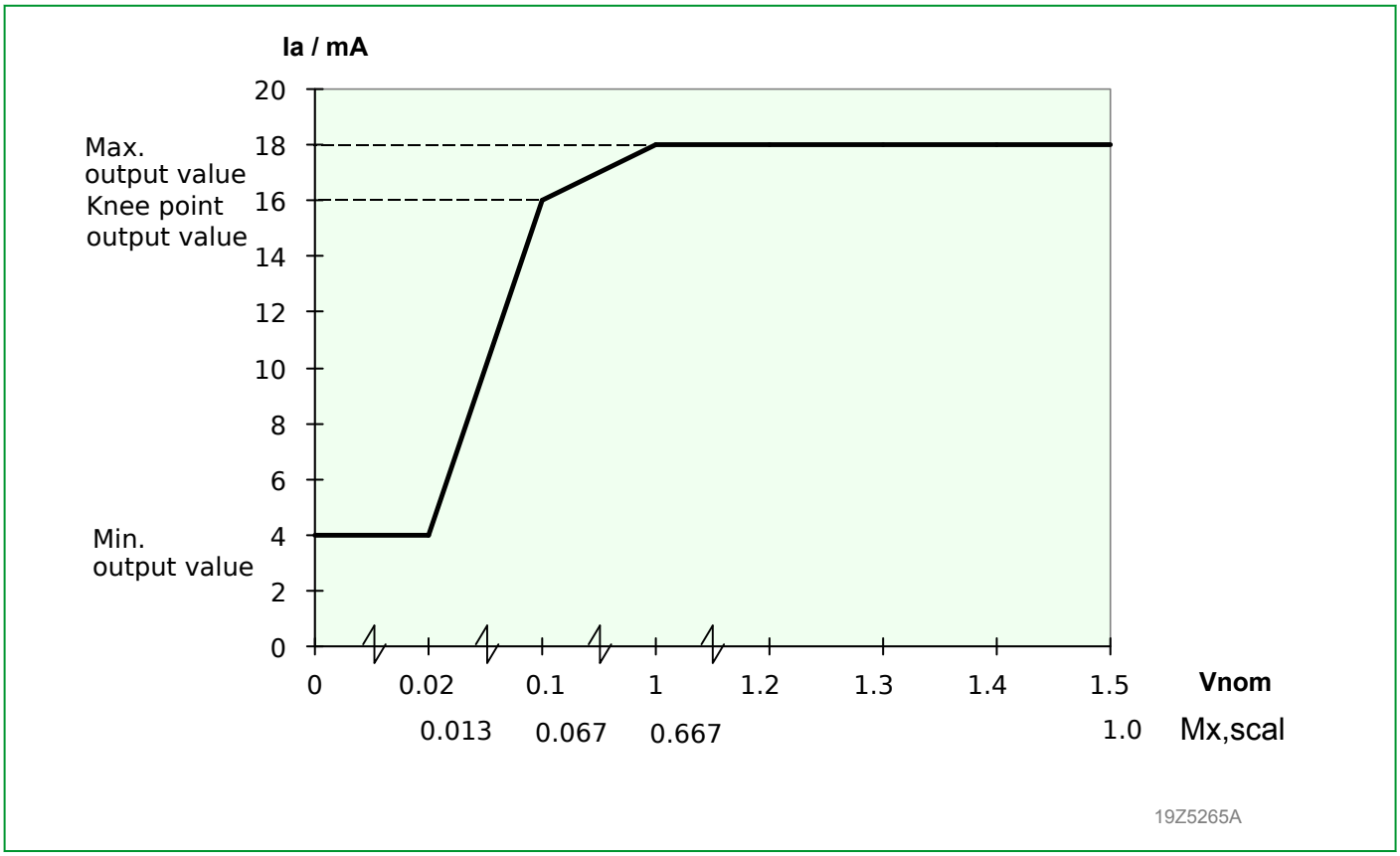

Fig. 3-44: Example of a characteristic curve for analog measured data output . In this example the range starting value is = 0; also possible is directional-signed output (see corresponding example in section BCD Measured Data Output).

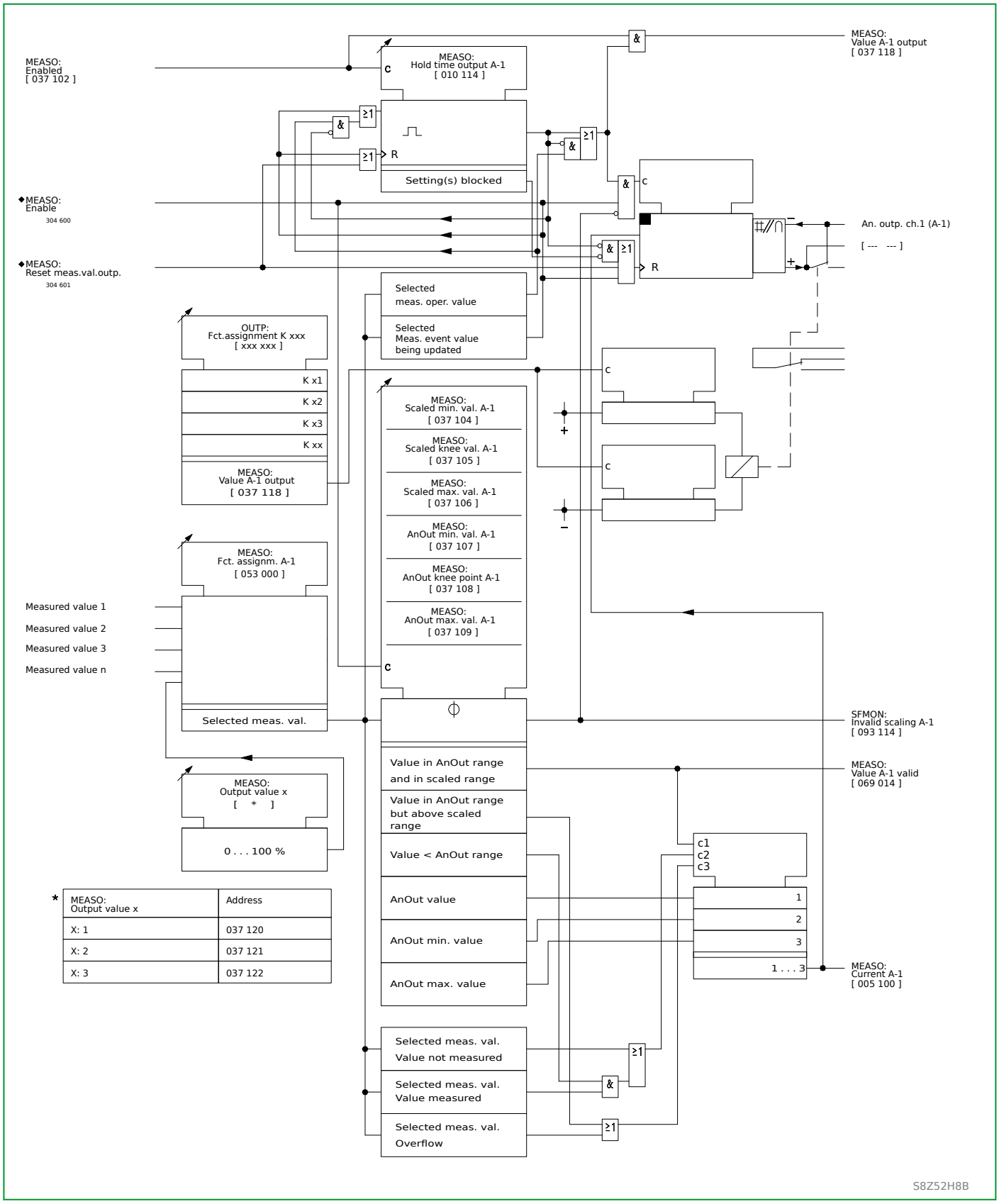

* MEASO: Output value x	Address
X: 1	037 120
X: 2	037 121
X: 3	037 122

Fig. 3-45: Analog measured data output

3.11.4 Output of “External” Measured Data

Measured data from external devices, which must be scaled to 0 ... 100%, can be written to the following parameters of the P633 via the communications interface.

- MEASO: Output value 1
- MEASO: Output value 1
- MEASO: Output value 1

These “external” measured values are output by the P633 either in BCD data form or as load-independent direct current, provided that the BCD measured data output function or the channels of the analog measured data output function are configured accordingly.

3.12 Configuration and Operating Mode of the LED Indicators (Function Group LED)

The P633 has 23 LED indicators for the indication of binary signals. Some of the LED indicators are permanently assigned to fixed functions. The other LED indicators are freely configurable. These freely configurable LEDs will emit either red or green or amber light (amber is made up of red and green light and may not be configured independently).

3.12.1 Configuring the LED Indicators

One binary signal can be assigned to each of the red and green LED color indications. The same binary signal can be assigned to several LED indicators (or colors), if required.

LED indicator	Label	Configuration
H 4 (red)	TRIP	With the P633 this LED indicator is customarily configured with function MAIN: Gen. trip signal, but the configuration may be modified.
H 4 (green)	—	Function assignment to this green LED indicator is freely configurable.
H 3 (amber)	ALARM	Permanently configured with function SFMON: Warning (LED).
H 2 (amber)	OUT OF SERVICE	Permanently configured with function MAIN: Blocked/faulty.
H 1 (green)	HEALTHY	Not configurable. H 1 indicates the operational readiness of the P633 (supply voltage is present).
H 17 (red)	EDIT MODE	Not configurable. H 17 indicates the input (edit) mode. Only when the P633 is in this mode, can parameter settings be changed by pressing the “Up” and “Down” keys. (See Section 6.2, (p. 6-2))
H 5 to H 16 H 18 to H 23	—	For each of these LED indicators both colors (red & green) may be configured freely and independently.

3.12.2 Layout of the LED Indicators

The following figure illustrates the layout of LED indicators situated on the local control panel.

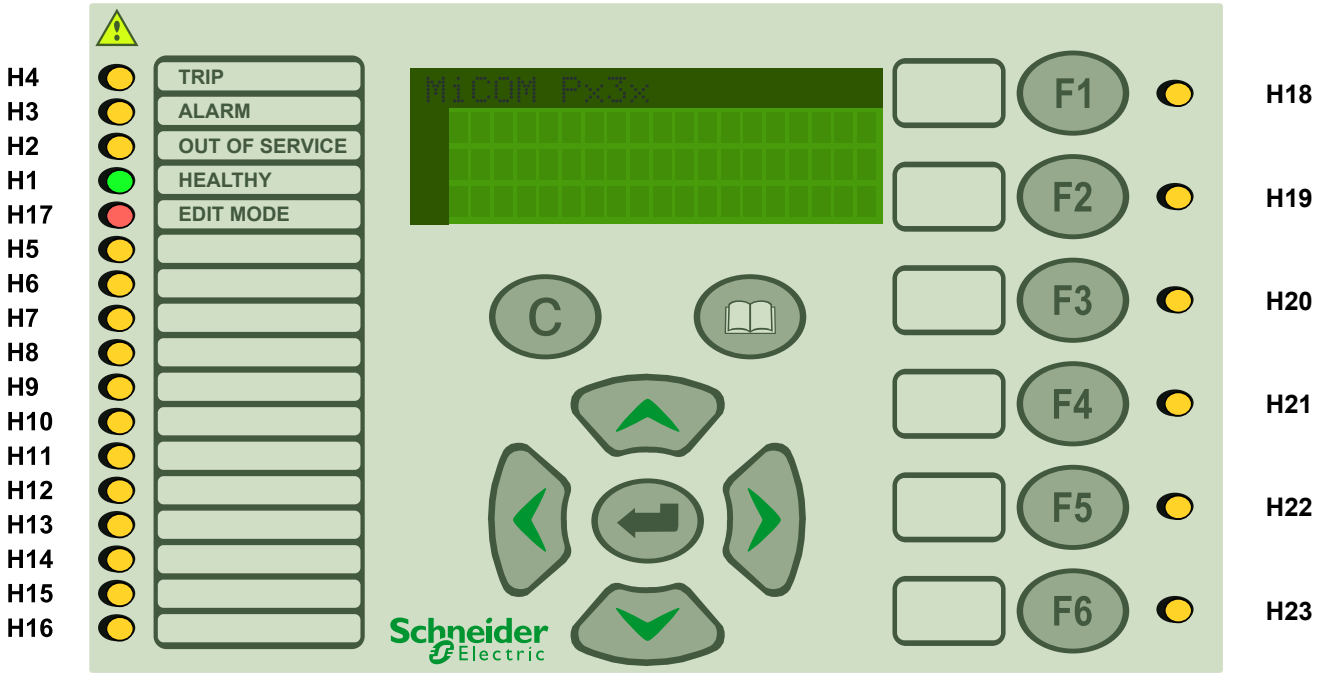

Fig. 3-46: Layout of the LED indicators.

3.12.3 Operating Mode of the LED Indicators

For each of the freely configurable LED indicators, the operating mode can be selected separately. This setting will determine whether the LED indicator will operate either in energize-on-signal (ES) or normally-energized (NE) mode, whether it will be flashing and whether it will be in latching mode. Latching is disabled either manually via setting parameters or by an appropriately configured binary signal input (see Section 3.13, (p. 3-80)) at the onset of a new fault, signalized by the onset of a general starting, or of a new system disturbance, depending on the selected operating mode.

Therefore the operating modes turn out to be the $2^3=8$ possible combinations of the following components:

- flashing / continuous,
- energize-on-signal (ES) / normally-energized (NE),
- updating / latching with manual reset,

in addition to these there are the following 4 operating modes:

- energize-on-signal (ES) with reset after new fault (flashing / continuous) and
- energize-on-signal (ES) with reset after new system disturbance (flashing / continuous),

so that there are 12 possible operating modes in total.

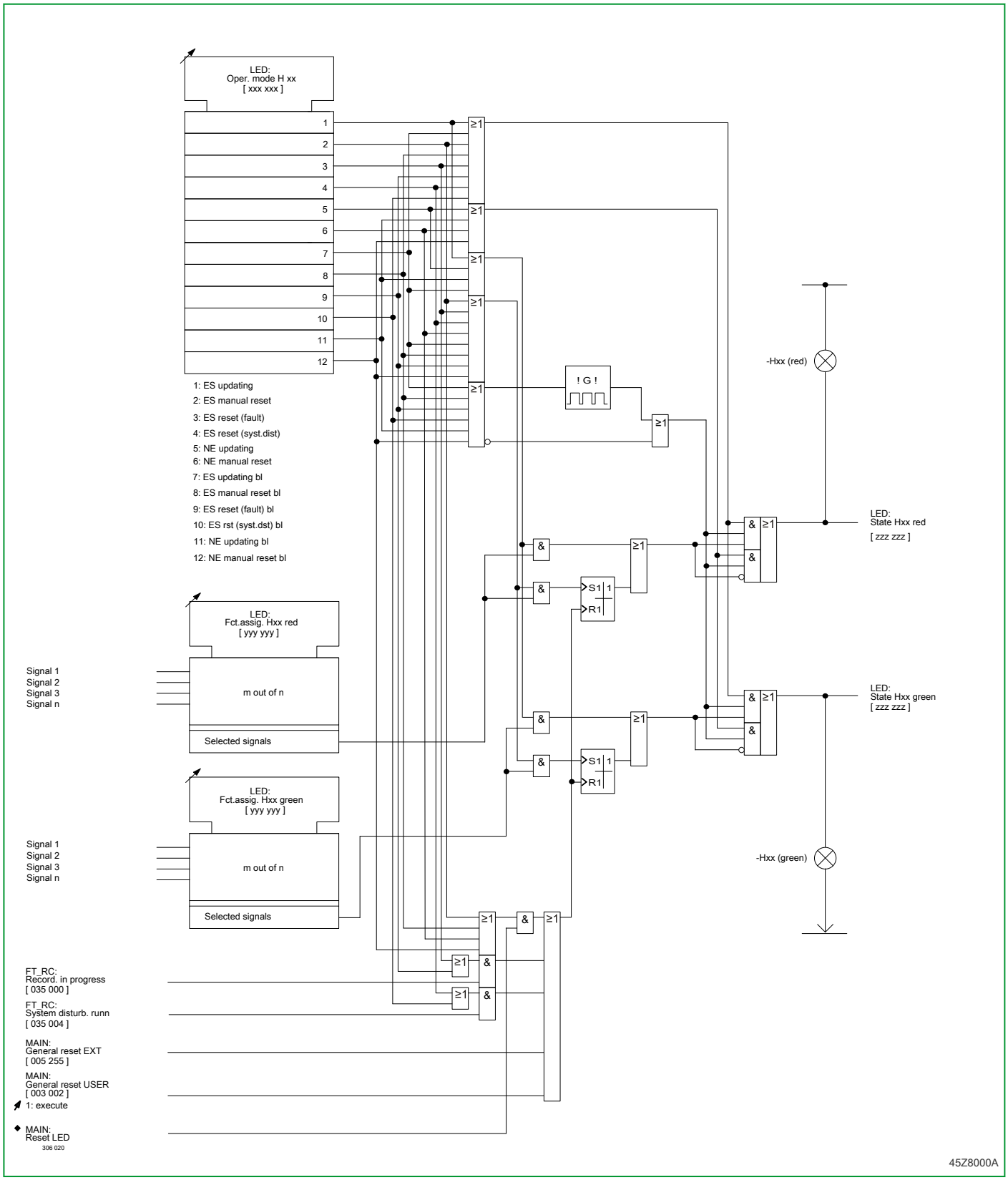

Fig. 3-47: Configuration and Operating Mode of the LED Indicators.

3.13 Main Functions of the P633 (Function Group MAIN)

3.13.1 Conditioning of the Measured Values

The secondary phase currents of the system transformers are fed to the P633. Furthermore, there is the option of connecting a measuring voltage. The measured values are – electrically isolated – converted to normalized electronics levels. The analog quantities are digitized and are thus available for further processing.

The P633 has the following measuring inputs:

- Current inputs (three phases) for the processing of measured values for 3 winding ends of the transformer.
- Current inputs for up to three neutral-point-to-ground connections (see Fig. 3-48, (p. 3-81)) or, alternatively, for looping into ground connections of the phase current transformers or for connection to a Holmgreen group.
- One voltage input.

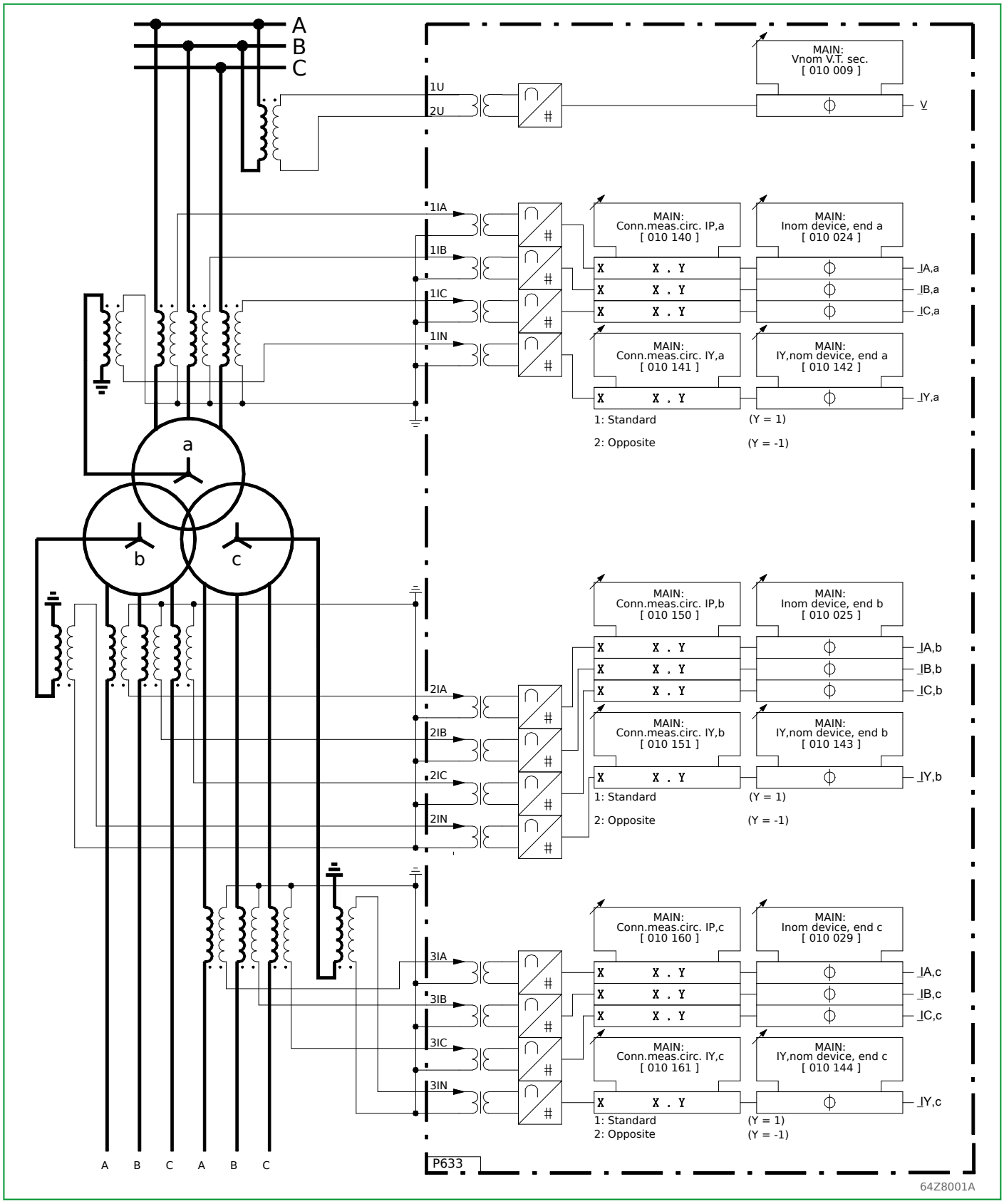

Fig. 3-48: Connection of the measured values to the P633, connection of the fourth current transformer set to the transformers of the neutral-point-to-ground connections.

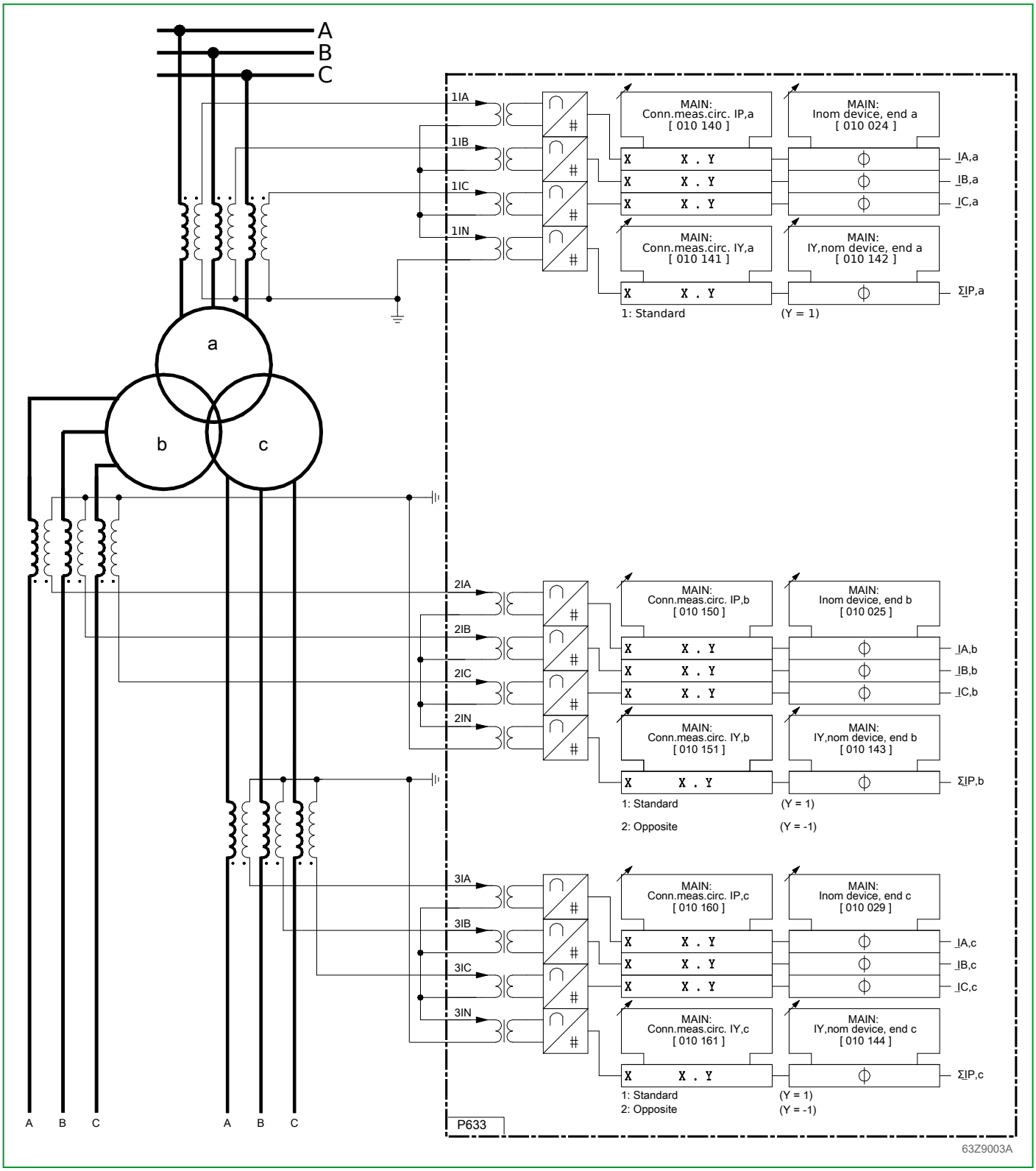

Fig. 3-49: Connection of the measured values to the P633, looping of the fourth current transformer set into the ground connections of the phase current transformers.

3.13.2 Phase Reversal Function

The phase reversal function is intended to protect machines in pumped storage power stations that are operated either as motors or as generators, depending on the demand. In such applications it is common practice to swap two phases in order to facilitate the pumping operation. Because of this, the P633 phase reversal function can maintain correct operation of all protection functions even if phase reversal is carried out within the protected zone.

The processing is done right after A/D conversion, such that the link between physical transformer input and internal numerical signal will be swapped, depending on the setting. (The measured values stored in the respective measured value memories are swapped.) Thus all further processing of measured values and protection functions remains unchanged.

Phase reversal can be set independently for each transformer end and in each parameter subset. The parameters are included in function group MAIN because phase reversal affects not only the differential protection function (DIFF), but also the negative sequence elements of Inverse and Definite Time Overcurrent protection functions (IDMTx, DTOCx) as well as Current Transformer Supervision (CTS) and Measuring- Circuit Monitoring (MCM_x) functions.

PS1	PS2	PS3	PS4	Description	Range of Values
010 200	010 201	010 202	010 203	MAIN: Phase reversal a PSx	● *No swap* (default) ● *A-B swapped* ● *B-C swapped* ● *C-A swapped*
010 204	010 205	010 206	010 207	MAIN: Phase reversal b PSx	
010 208	010 209	010 210	010 211	MAIN: Phase reversal c PSx	

Using parameter subsets readily allows phase reversal to be activated via any control interface (LOC, PC, COMMx) or via appropriately configured binary signal inputs.

Since the currently active parameter subset is shown on the LC-display and may be recalled from the recordings, phase reversal information is accessible. There are however applications where an additional display of a phase reversal may be useful. Such would be the case when recordings by a P633 are to be compared with those by other devices not featuring phase reversal (e.g. Backup overcurrent-time protection device) and without knowledge of the P633 setting file. For this the following display is used:

	Description	Range of Values
036 220	MAIN: Phase reversal activ	● *No* (default) ● *Yes*

Phase reversal is active (*Yes*) when at least one of the setting parameters in the active parameter subset has a value other than *No swap*.

The setting file must be viewed to determine which phases are swapped.

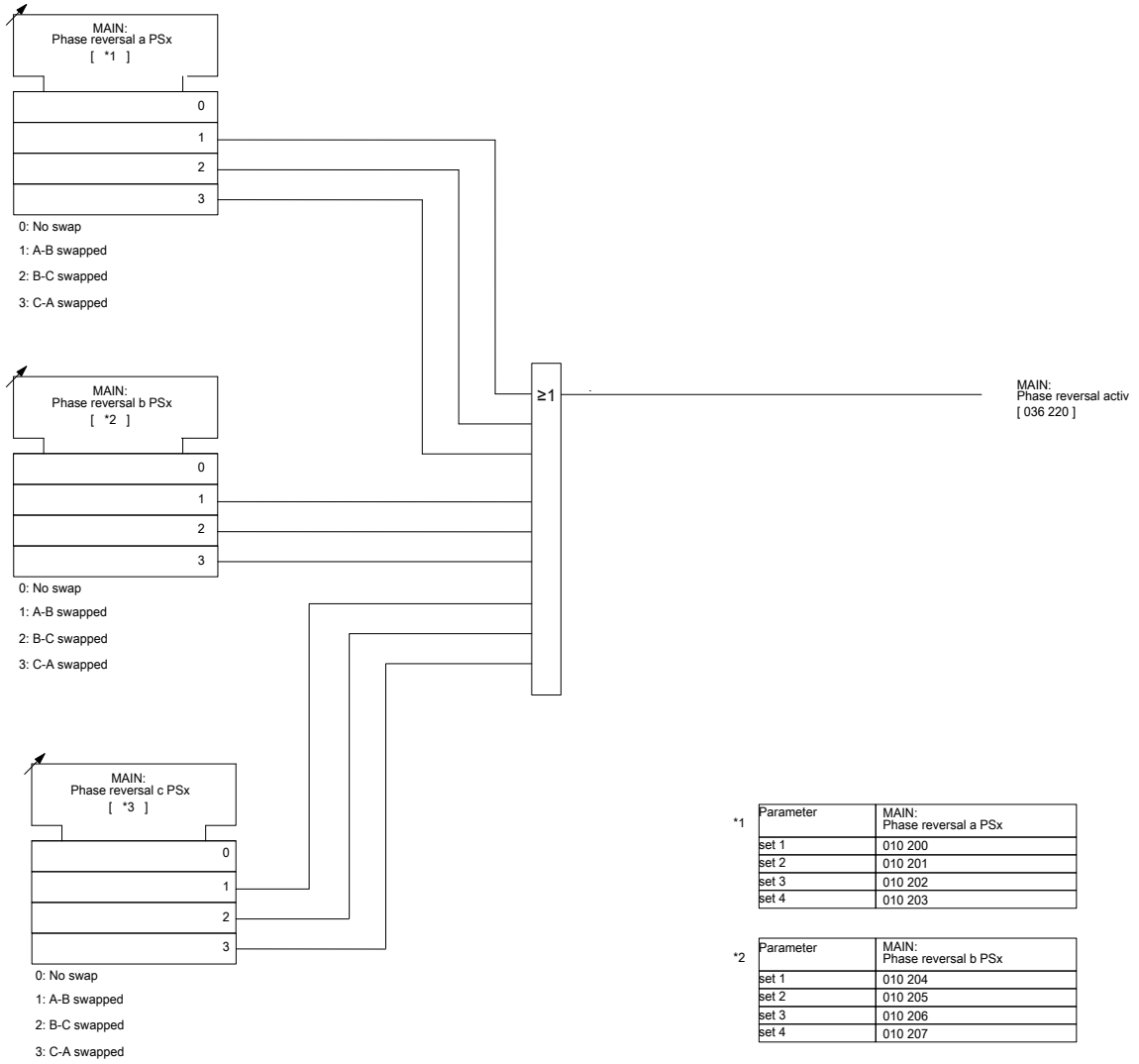

*1

Parameter	MAIN: Phase reversal a PSx
set 1	010 200
set 2	010 201
set 3	010 202
set 4	010 203

*2

Parameter	MAIN: Phase reversal b PSx
set 1	010 204
set 2	010 205
set 3	010 206
set 4	010 207

*3

Parameter	MAIN: Phase reversal c PSx
set 1	010 208
set 2	010 209
set 3	010 210
set 4	010 211

Fig. 3-50: Phase reversal function of the P633

3.13.3 Disconnecting Transformer Ends

With the P633, one transformer end can be disconnected when specific protections are applied or for test purposes.

If more ends are simultaneously disconnected from the measurement than is permitted, the SFMON: Unsuff. No. of ends alarm is issued and the device is blocked.

Such a disconnection of an end will result in the setting to zero of all current scan values for the relevant phase (phase current and residual current).

All functions (e.g. protection functions, limit value monitoring, operating data measurement, etc.) will continue to operate unaffected, with these values set to zero.

With the differential protection function the formula to calculate the restraining current is not changed by disconnecting ends, even though only two ends may be left.

Disconnecting an end may only be carried out with binary signal input functions. Starting via operating parameters (or command sent through a communications interface) is not possible.

(041 019) MAIN: Disconnect End a EXT

(041 107) MAIN: Disconnect End b EXT

(041 128) MAIN: Disconnect End c EXT

The binary signal input functions listed above must be continuously present when disconnecting ends.

To enable the disconnection function, one of the following additional conditions must be met:

- All three phase currents at the relevant end must be below 0.05 I_{nom}:

  Disconnection of the end will be permanent as soon as (immediately after) the binary signal input function has started and this loss of load/ undercurrent condition is met.

  Disconnection of the end will be permanently cancelled as soon as (immediately after) the binary signal input function has ended and this loss of load/undercurrent condition is met.

  The P633 will continue to measure any current flow in the disconnected end in order to check this loss of load/undercurrent condition, but will not display these measured values.
- The disconnection function, as an alternative to the loss of load/ undercurrent condition, can be enabled using another binary signal input function (041 148) MAIN: En. disc. end x EXT

  As soon as both binary signal input functions are present, disconnection of the end will be effective.

  As long as the enabling signal is not present at the binary signal input, there is no status change, i.e. an existing disconnection of an end will remain active independently of the disconnection request.

  As soon as the disconnection request ends with the enable signal still present at the binary signal input then the disconnection of the end will be permanently cancelled.

As shown in Fig. 3-51, (p. 3-86), both additional conditions are valid independently of each other, i.e. the following sequence is possible and requires appropriate care in the application:

1. The disconnection of an end is enabled by the additional condition: MAIN: En. disc. end x EXT
2. This enabling condition and the disconnection request will end, for instance, with a fault in the triggering circuit.
3. As soon as the measured current value in the disconnected end drops below the 0.05 I_{nom} threshold then the disconnection will be cancelled.

The effective disconnection of an end is signaled by a state signal.

(041 149) MAIN: End a disconnected

(041 158) MAIN: End b disconnected

(041 159) MAIN: End c disconnected

The ends are disconnected without delay, if the conditions above are fulfilled, and this state is stored in fail-safe memory. The transfer of the actual connection state, however, into non-volatile memory is carried out with an operate/reset

time-delay of approximately 0.5 s in order to prevent synchronicity problems resulting from simultaneously switching on/off the auxiliary power supply and the signal voltage at the binary signal input.

During the initialization phase after a failure of the auxiliary power supply, the stored state is compared with the current state of the input functions. If a discrepancy is detected (e.g. MAIN: En. disc. end x EXT AND NOT MAIN: Disconnect End a EXT, or vice versa) the alarm message SFMON: Disc. end x invalid is issued and the device remains blocked. The blocking is cancelled as soon as the discrepancy ends, i.e. when the current state of the binary input matches the logical state stored in the device. This is carried out without checking the additional conditions mentioned above. Since the alarm is being stored in the monitoring signal memory, it must be acknowledged by the user.

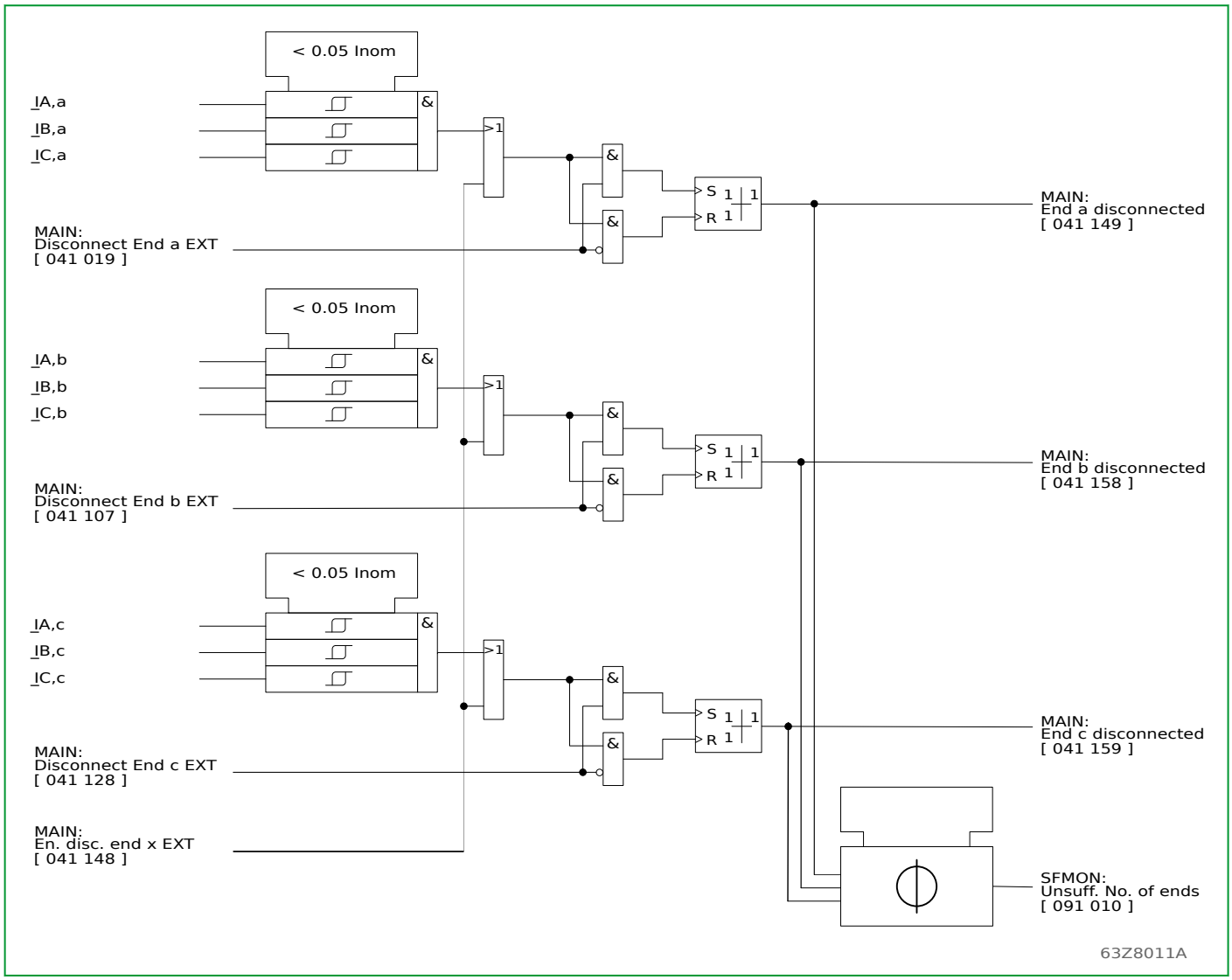

Fig. 3-51: Disconnection logic

3.13.4 Selection of the Residual Current to be Monitored

For protection functions of the P633 monitoring the residual current, the user can select whether the device is to use the current derived from the three phase currents or the current measured at the fourth current transformer; see also Fig. 3-48, (p. 3-81).

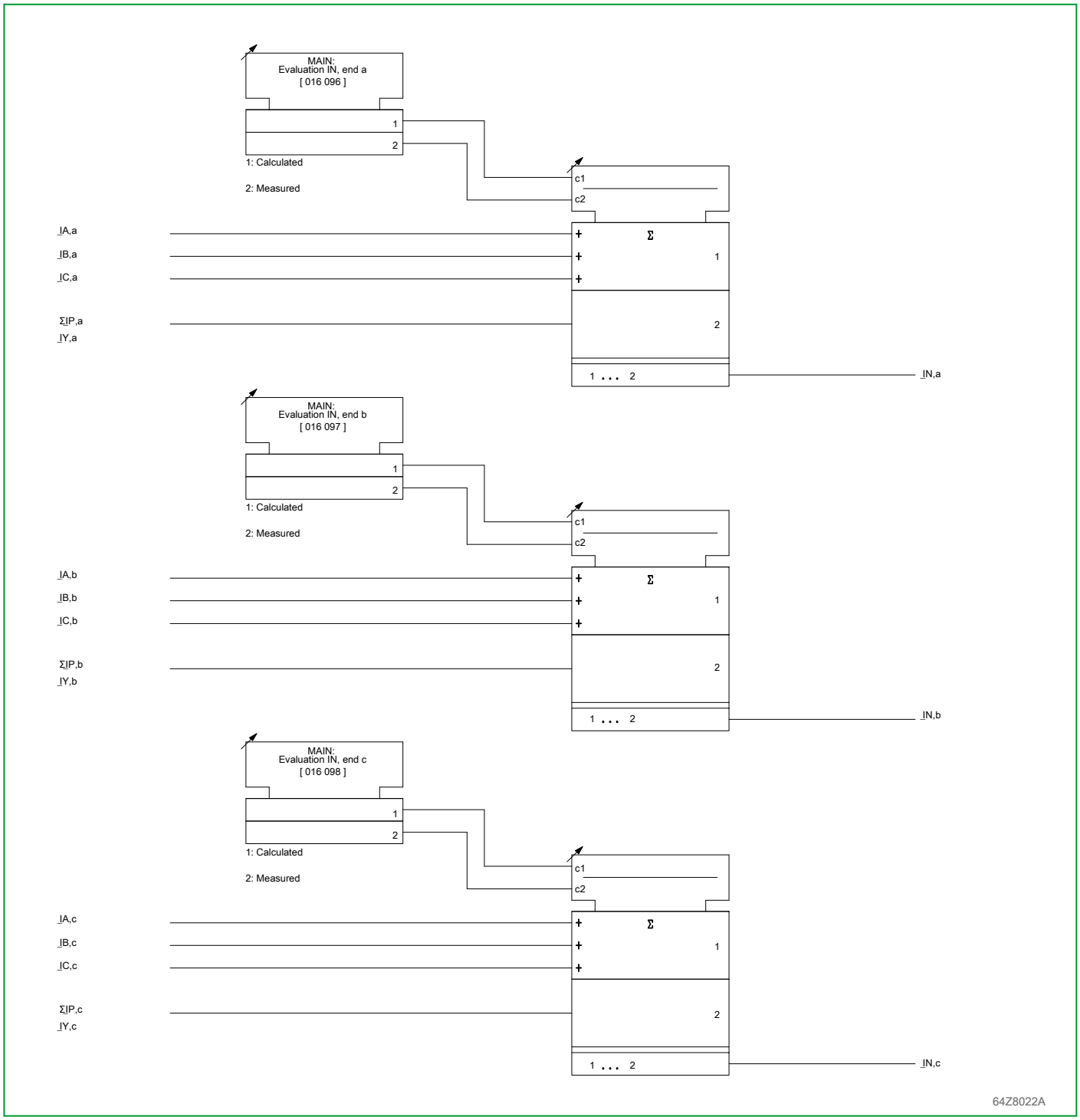

Fig. 3-52: Evaluation of residual current

3.13.5 Forming a Virtual Transformer End

The P633 offers the option of forming a new variable by combining the phase currents or the residual currents from two or three ends of the transformer.

3.13.5.1 Possible Combinations to Form a Virtual Transformer End

The following combinations are possible:

- Forming the sum of the phase currents or of the residual currents from two ends of the transformer.

  The following options exist:
  - *End(a)+end(b)*
  - *End(a)+end(c)*
  - *End(b)+end(c)*
- Forming the sum of the phase currents or of the residual currents from three ends of the transformer:
  - *End(a)+end(b)+end(c)*
- Subtracting the phase currents or the residual currents from two ends of the transformer. By subtraction (unstable) transverse differential protection including time-overcurrent protection may be obtained.

  The following options exist:
  - *End(a)-end(b)*
  - *End(a)-end(c)*
  - *End(b)-end(c)*

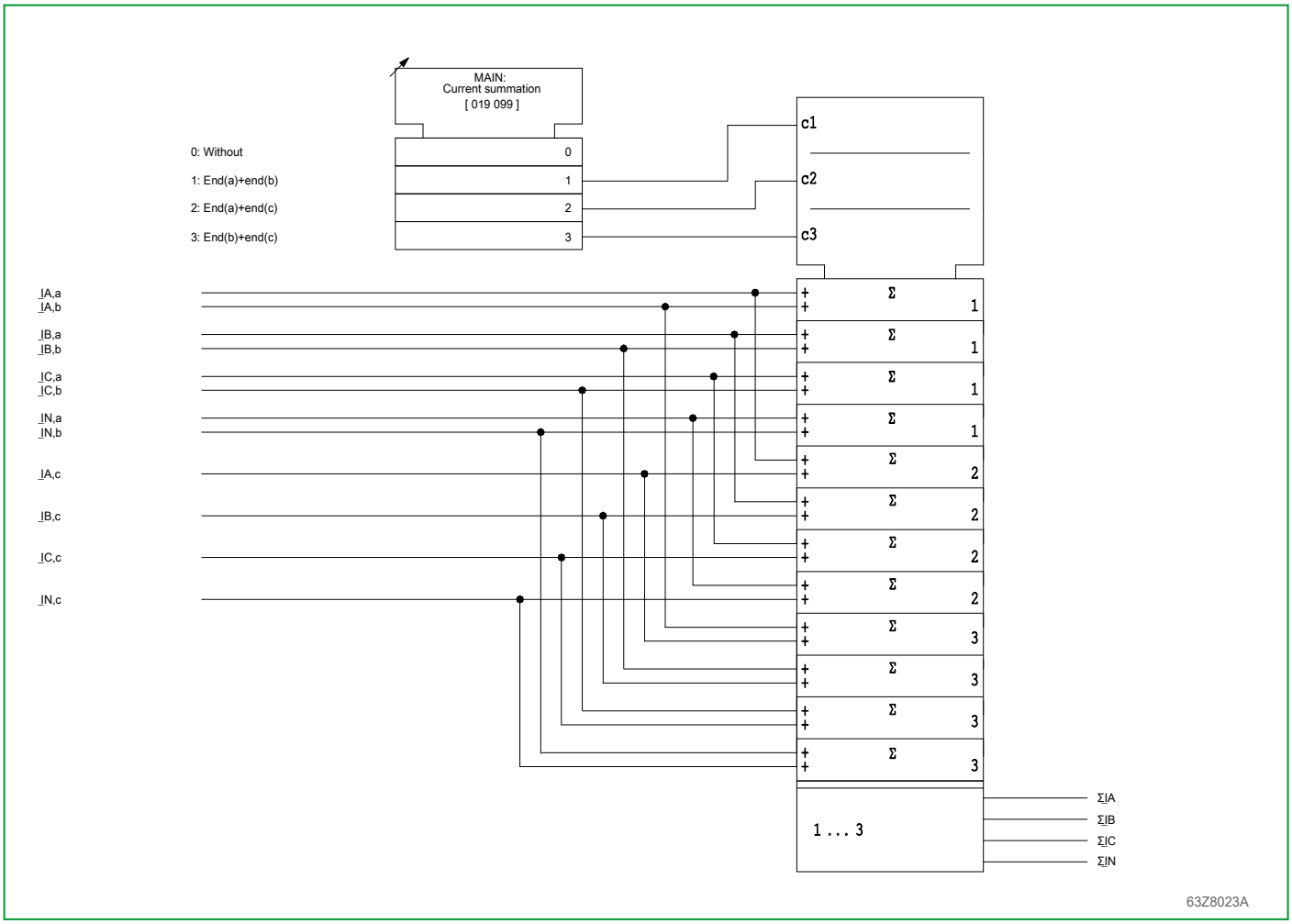

Fig. 3-53: Forming the sum of the phase currents or of the residual currents

3.13.6 Operating Data Measurement

The P633 has an operating data measurement function for the display of currents and voltages measured as well as quantities derived from these measured values. For the display of measured values, set lower thresholds need to be exceeded, to avoid fluctuating small values from noise. If these lower thresholds are not exceeded, the value *Not measured* is displayed. The following measured variables are displayed:

- Phase currents of all three phases of all 3 ends of the transformer
- Maximum phase current of each end of the transformer
- Minimum phase current of each end of the transformer
- Delayed and stored maximum phase current of each end of the transformer
- Positive- and negative-sequence current measured values of all ends
- Current I_N derived by the P633 from the sum of the phase currents for each end of the transformer
- Current I_Y measured by the P633 at transformer -Tx4 (x: 1, 2 or 3)
- Phase currents of all three phases of the virtual end of the transformer. The virtual end is formed by adding the corresponding currents of two transformer ends selected by the user at MAIN: Current summation; see Section 3.13.5, (p. 3-87).
- Positive- and negative-sequence current measured values of the virtual end
- Maximum phase current of the virtual end of the transformer
- Minimum phase current of the virtual end of the transformer
- Current I_N of the virtual end of the transformer
- Voltage
- Frequency
- Angle between the phase currents for a given end of the transformer
- Angle between the currents of the same phase between two ends of the transformer
- Angle between derived IN and the current measured at transformer -Tx4 (x: 1, 2 or 3)

The measured data are updated at approximately 1 s intervals. Updating is interrupted if a general starting state occurs or if the self-monitoring function detects a hardware fault.

3.13.6.1 Measured Current Values

The measured current values are displayed both as per-unit quantities referred to the nominal quantities of the P633 and as primary quantities. To allow display in primary values, the primary nominal current of the system current transformer should be set in the P633.

3.13.6.2 Display of Delayed and Stored Maximum Phase Currents

Delayed Maximum Phase Current

The P633 offers the option of a delayed display of the maximum value of the three phase currents (thermal ammeter function). The delayed maximum phase current display is an exponential function of the maximum phase current $I_{P,max}$ (see upper curve in Fig. 3-54, (p. 3-91)). The time after which the delayed maximum phase current display will have reached 95 % of maximum phase current $I_{P,max}$ is set at MAIN: Settl. t. IP,max,del.

Stored Maximum Phase Current

The stored maximum phase current follows the delayed maximum phase current. If the value of the delayed maximum phase current is declining, then the highest value of the delayed maximum phase current remains stored. The display remains constant until the actual delayed maximum phase current exceeds the value of the stored maximum phase current (see middle curve in Fig. 3-54, (p. 3-91)). The stored maximum phase current is set to the actual value of the delayed maximum phase current at MAIN: IP,max p.u.,stored a, using end a as an example (see lower curve in Fig. 3-54, (p. 3-91)).

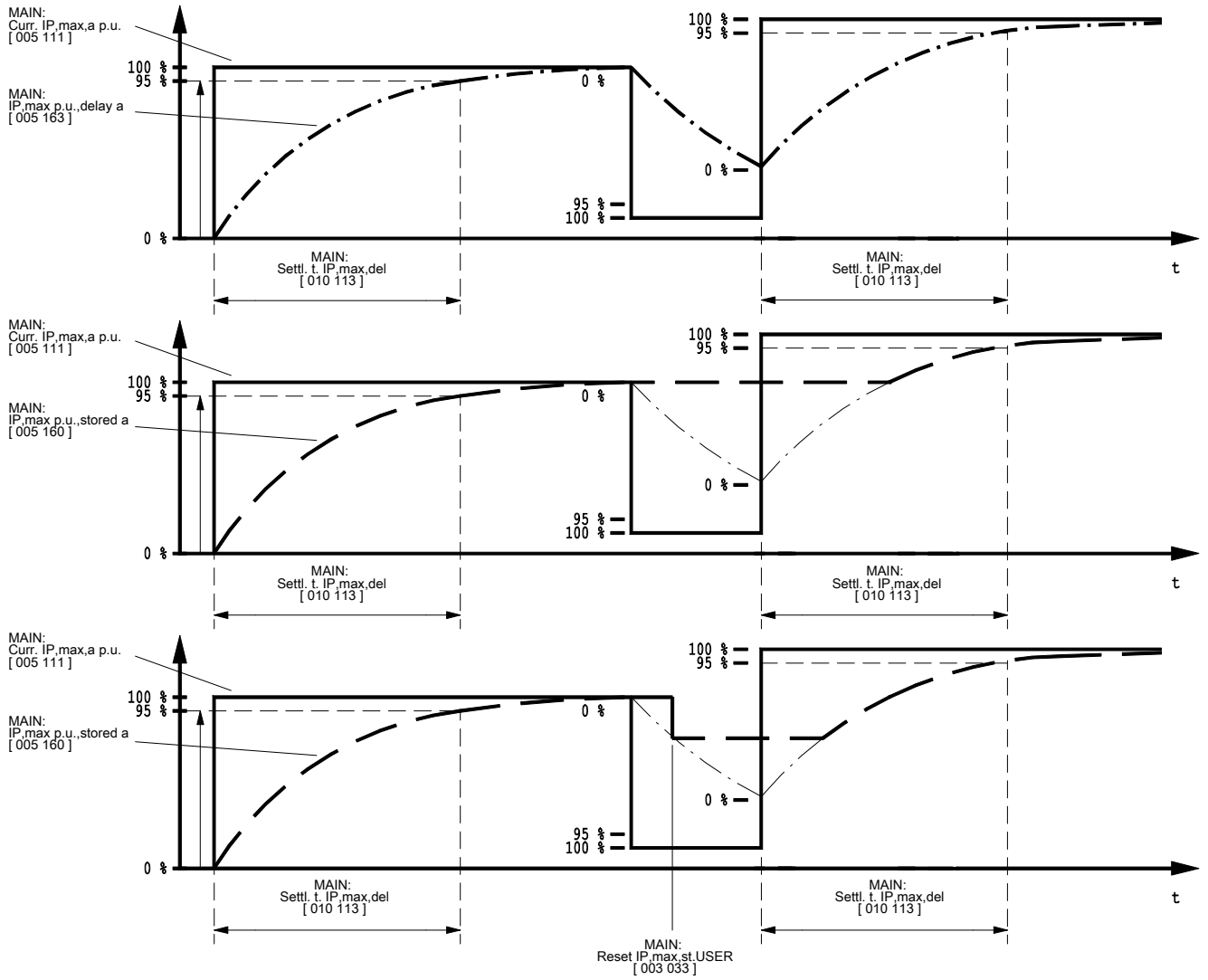

End a	End b	End c
MAIN: Curr. IP,max,a p.u. 005 111	MAIN: Curr. IP,max,b p.u. 005 112	MAIN: Curr. IP,max,c p.u. 005 113
MAIN: IP,max p.u.,stored a 005 160	MAIN: IP,max p.u.,stored b 006 160	MAIN: IP,max p.u.,stored c 007 160
MAIN: IP,max p.u.,delay a 005 163	MAIN: IP,max p.u.,delay b 006 163	MAIN: IP,max p.u.,delay c 007 163

Fig. 3-54: Operation of delayed and stored maximum phase current display, shown here for end a

3.13.6.2.1 Measured Operating Data for the Phase Currents

The following diagram shows the measured operating data for the phase currents, using the transformer end a as an example.

The parameters given apply to transformer end a. The corresponding parameters of the other transformer ends are given in Chapter 7, (p. 7-1) and Chapter 8, (p. 8-1).

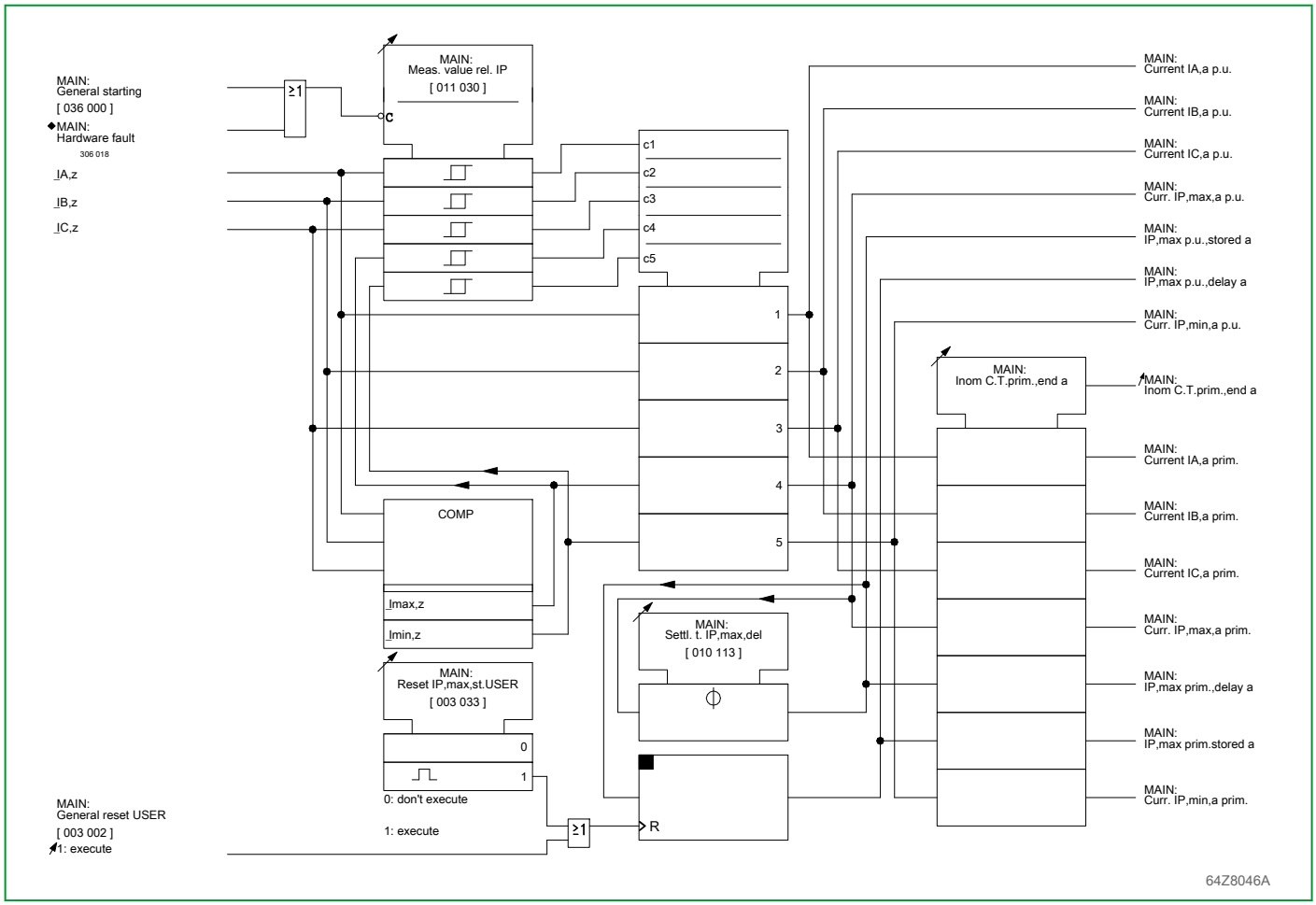

Fig. 3-55: Measured operating data for the phase currents, shown here for end a

3.13.6.2.2 Measured Operating Data for the Residual Currents

The following diagram shows the measured operating data for the residual currents.

The parameters given apply to transformer end a. The corresponding parameters of the other transformer ends (b, c) are given in Chapter 7, (p. 7-1) and Chapter 8, (p. 8-1).

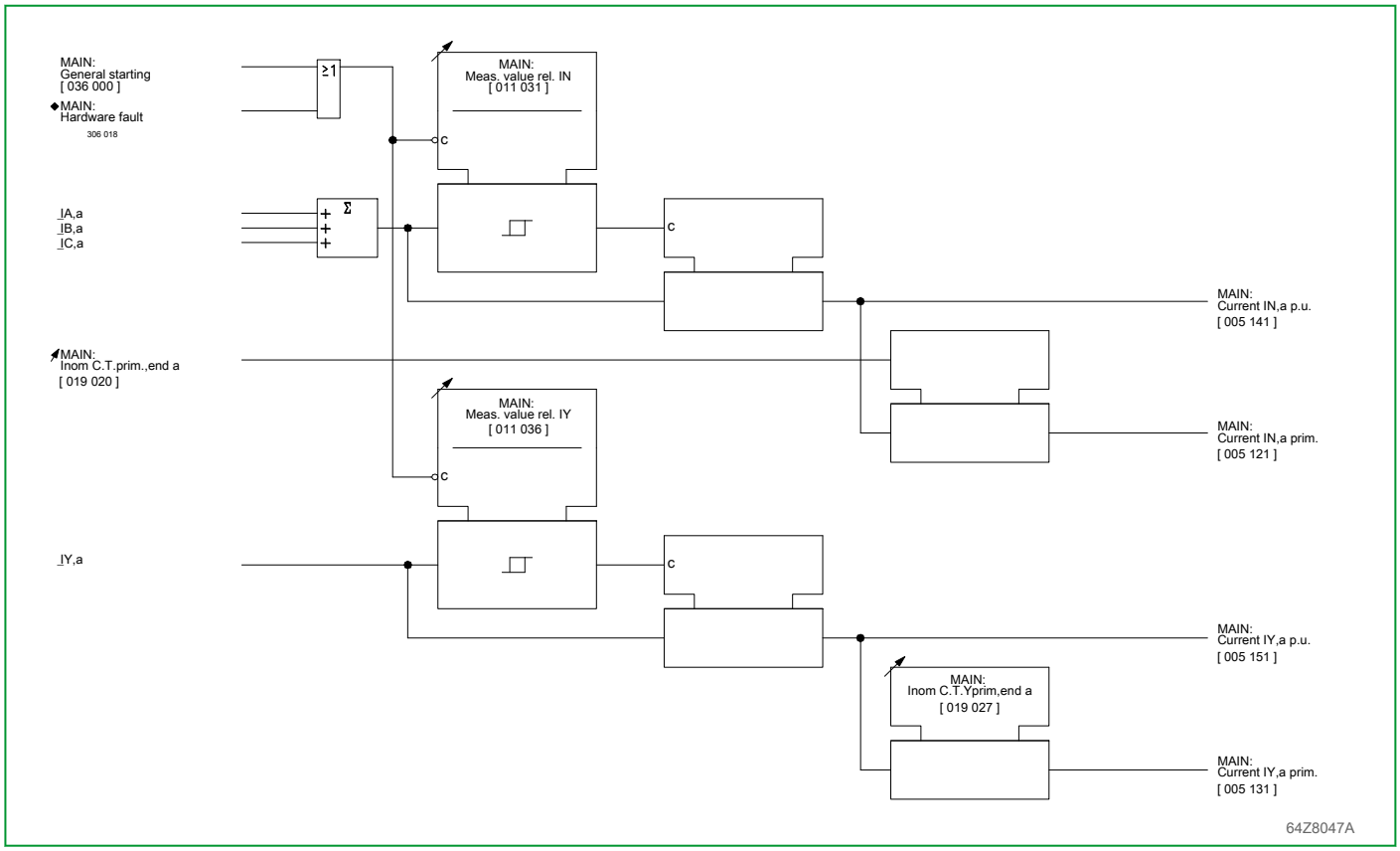

Fig. 3-56: Measured operating data for the residual currents, shown here for end a

3.13.6.2.3 Measured Operating Data for the Phase Currents and Residual Currents for the Virtual End

The following diagram shows the measured operating data for the phase currents and the residual currents for the virtual end (formed by current summation; see also Section 3.13.5, (p. 3-87)).

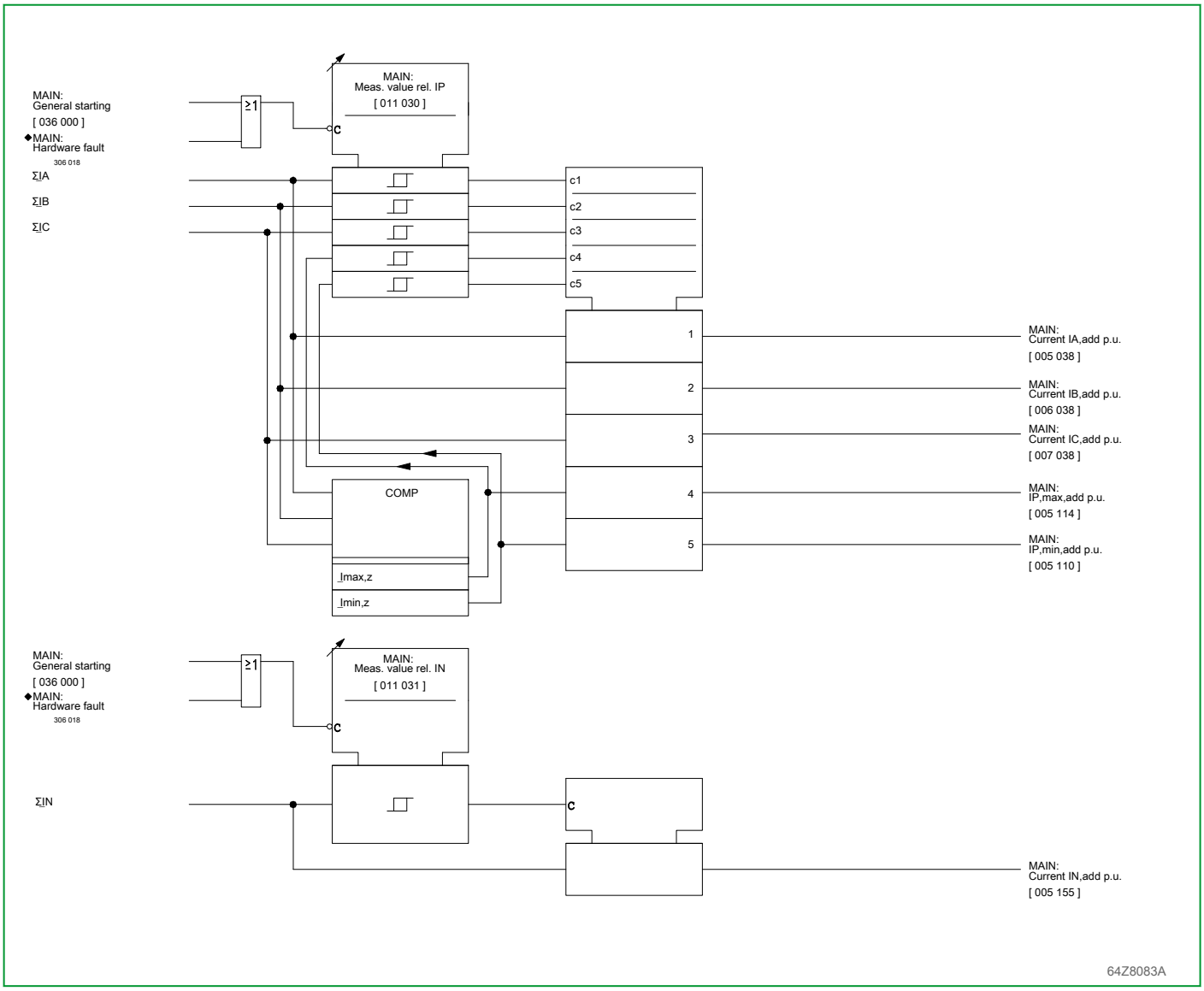

Fig. 3-57: Measured operating data for the phase currents and the residual current for the virtual end

3.13.6.3 Positive- and negative-sequence currents

The positive- and negative-sequence current measured values of all ends (primary and per unit values) are determined continuously and displayed as measured operating data:

End a	End b	End c
MAIN: Current Ineg a prim. (005 125)	MAIN: Current Ineg b prim. (005 129)	MAIN: Current Ineg c prim. (005 136)
MAIN: Current Ipos a prim. (005 127)	MAIN: Current Ipos b prim. (005 134)	MAIN: Current Ipos c prim. (005 138)
MAIN: Current Ineg a p.u. (005 126)	MAIN: Current Ineg b p.u. (005 130)	MAIN: Current Ineg c p.u. (005 137)
MAIN: Current Ipos a p.u. (005 128)	MAIN: Current Ipos b p.u. (005 135)	MAIN: Current Ipos c p.u. (005 139)

The positive- and negative-sequence current measured values of the virtual end, formed by summation or subtraction of current values (primary and per unit values), are also continuously determined and displayed as measured operating data:

Positive-sequence current	MAIN: Curr. Ineg,add p.u. (005 149)
Negative-sequence current	MAIN: Curr. Ipos,add p.u. (005 150)

When the CB's contacts are open, it is also possible to force to zero the setting of small positive- and negative-sequence current measured values if such measured values are below additionally created settable thresholds.

Measured value relating to positive-sequence current	MAIN: Meas.value rel. Ipos (011 058)
Measured value relating to negative-sequence current	MAIN: Meas.value rel. Ineg (011 048)

3.13.6.4 Measured Voltage Values

The measured voltage values are displayed both as per-unit quantities referred to the nominal quantities of the P633 and as primary quantities. To allow a display in primary values, the primary nominal voltage of the system transformer needs to be set in the P633.

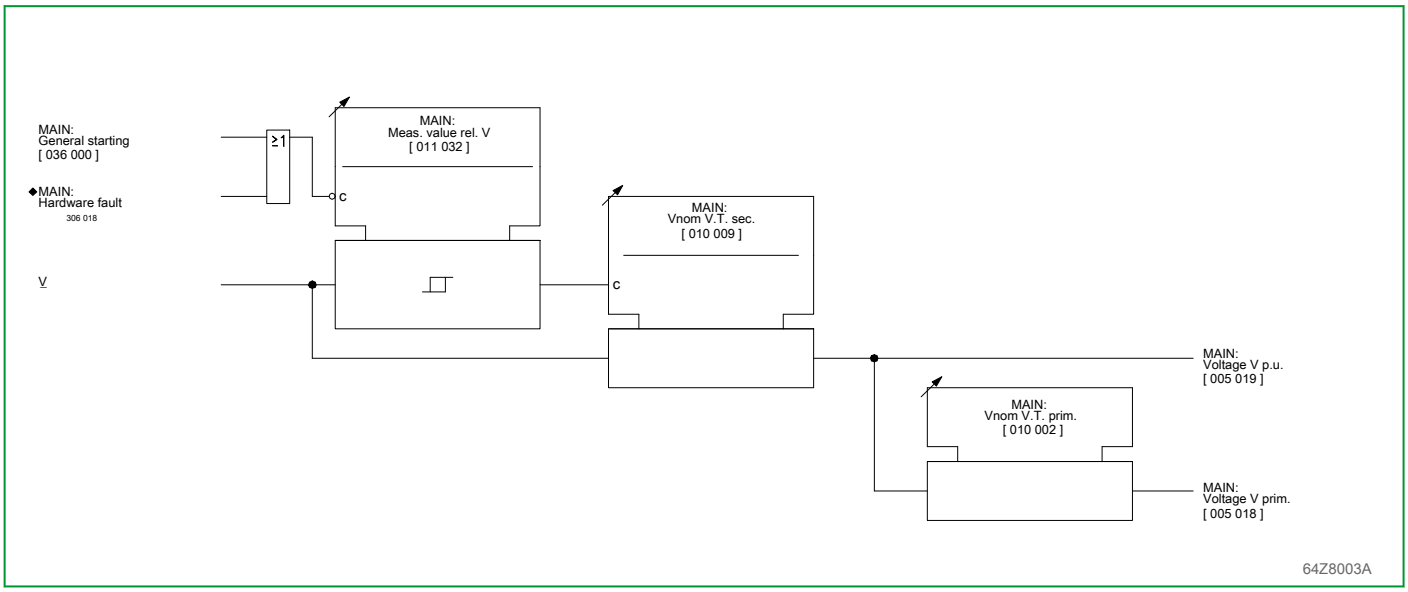

Fig. 3-58: Measured voltage value

3.13.6.5 Frequency

The P633 determines the frequency from the voltage. This voltage needs to exceed a minimum threshold of 0.65 V_{nom} in order for frequency to be determined.

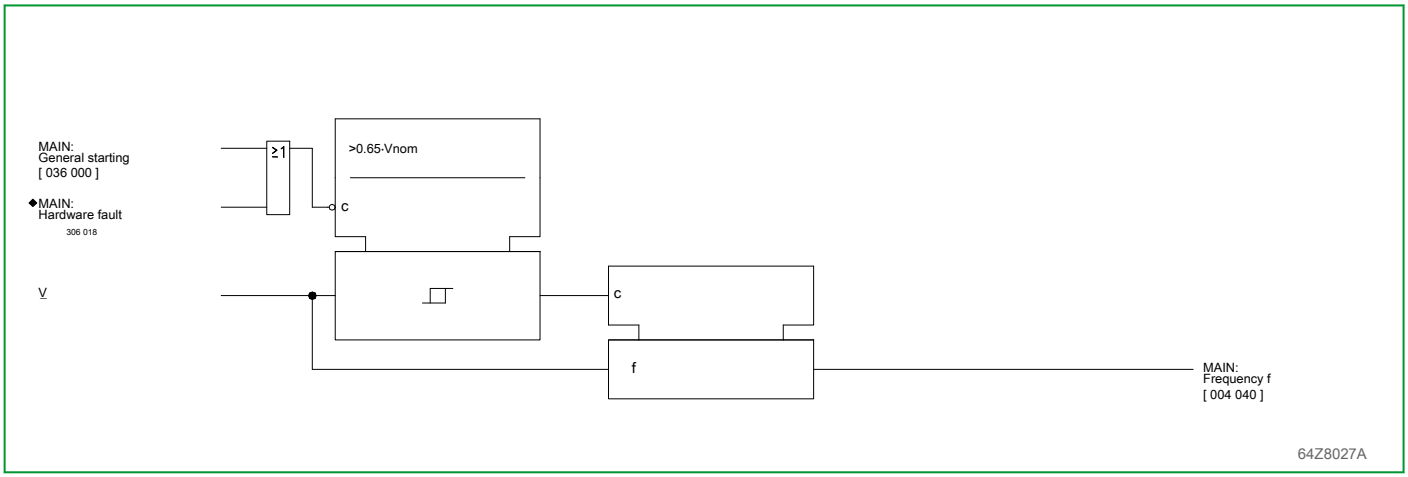

Fig. 3-59: Frequency measurement.

3.13.6.6 Angle Determination

The P633 determines the angle between the following currents if the associated currents exceed the minimum threshold of 0.033 I_{nom}:

- Angle between the phase currents for each end of the transformer
- Angle between the currents of the same phase between two ends of the transformer
- Angle between the derived residual current and the current measured at the transformer -Tx4 (see Section 5.7, (p. 5-26)) for each end of the transformer

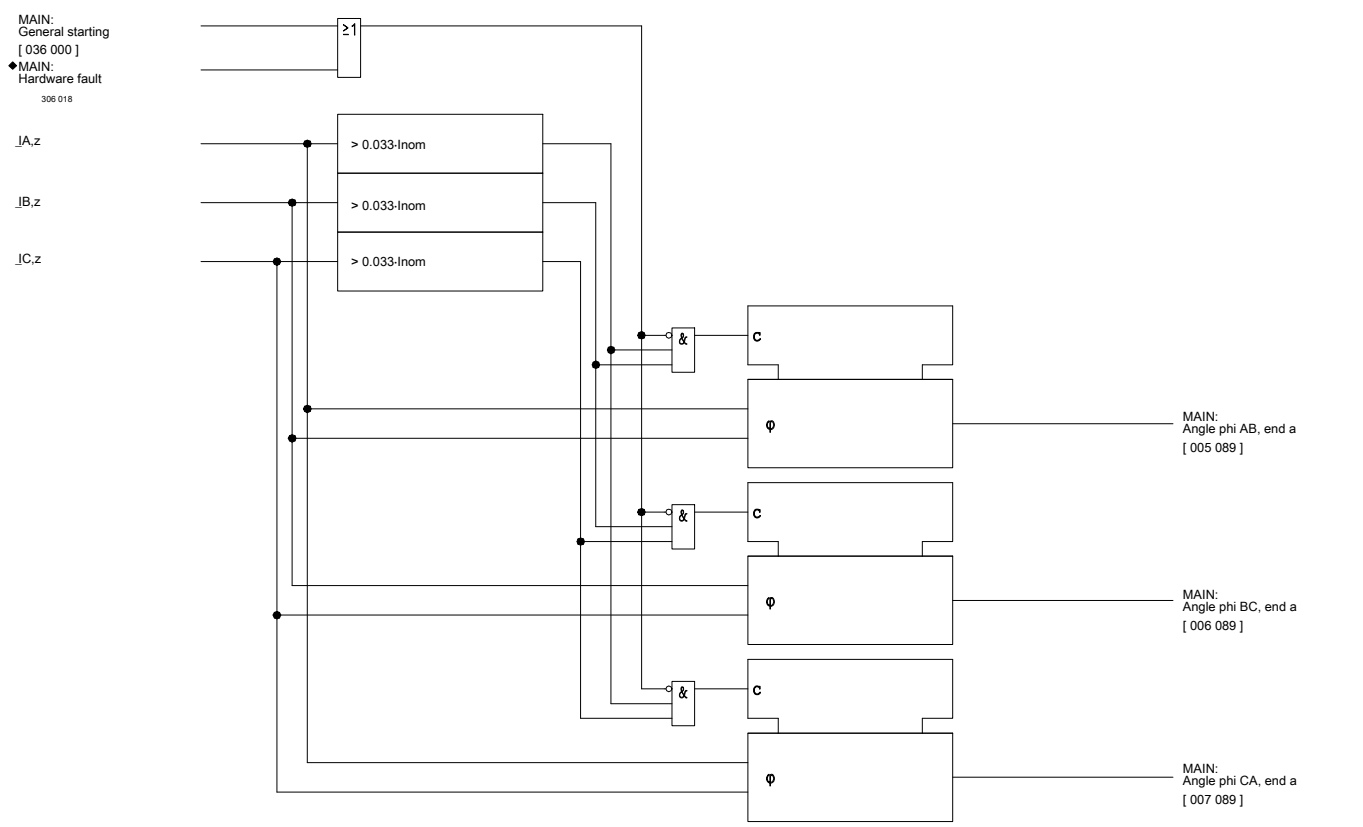

End a	End b	End c
MAIN: Angle phi AB, end a [005 089]	MAIN: Angle phi AB, end b [005 092]	MAIN: Angle phi AB, end c [005 093]
MAIN: Angle phi BC, end a [006 089]	MAIN: Angle phi BC, end b [006 092]	MAIN: Angle phi BC, end c [006 093]
MAIN: Angle phi CA, end a [007 089]	MAIN: Angle phi CA, end b [007 092]	MAIN: Angle phi CA, end c [007 093]

Fig. 3-60: Determination of the angle between the phase currents, shown here for end a

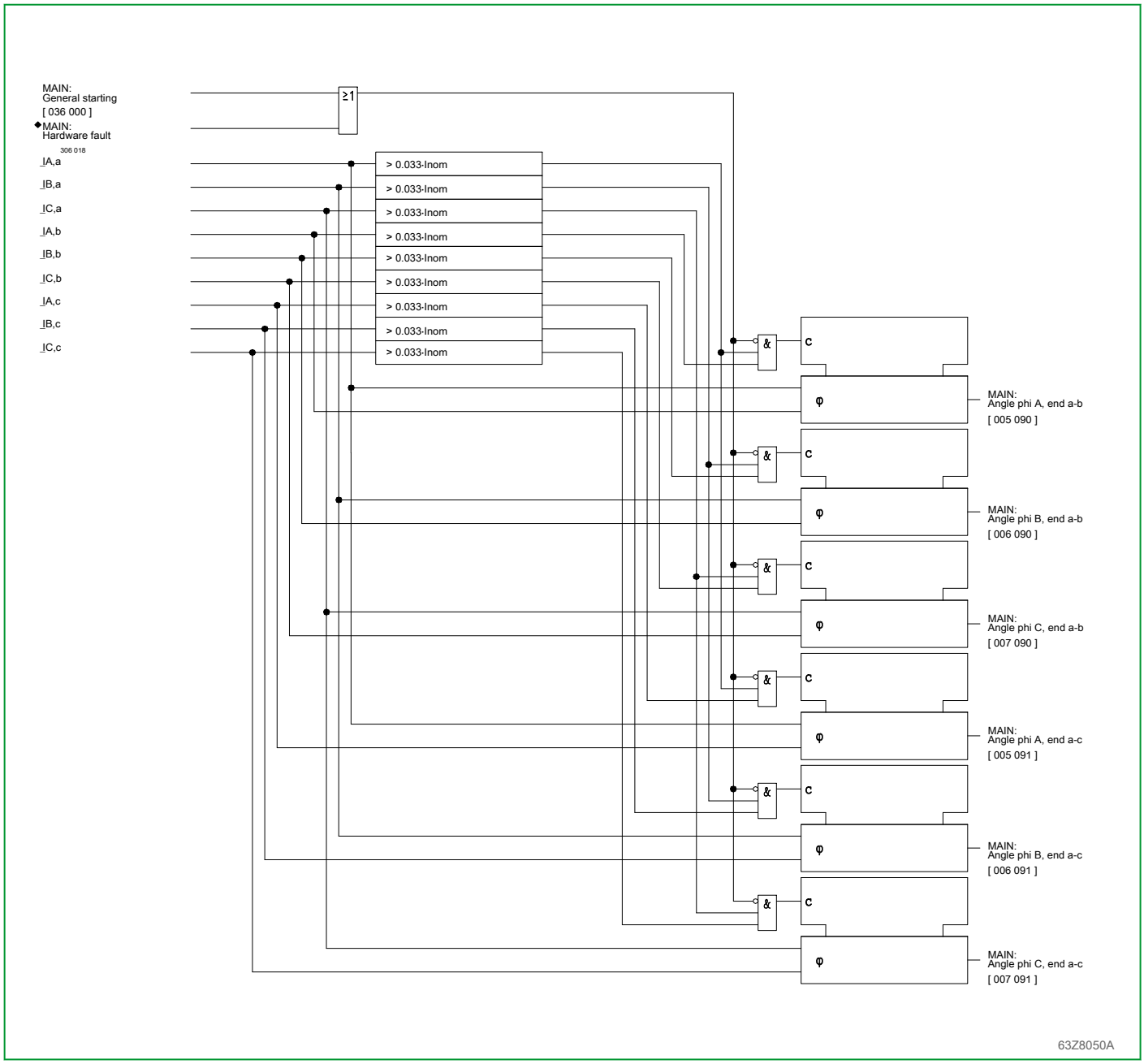

Fig. 3-61: Determination of the angle between the phase currents of the transformer ends

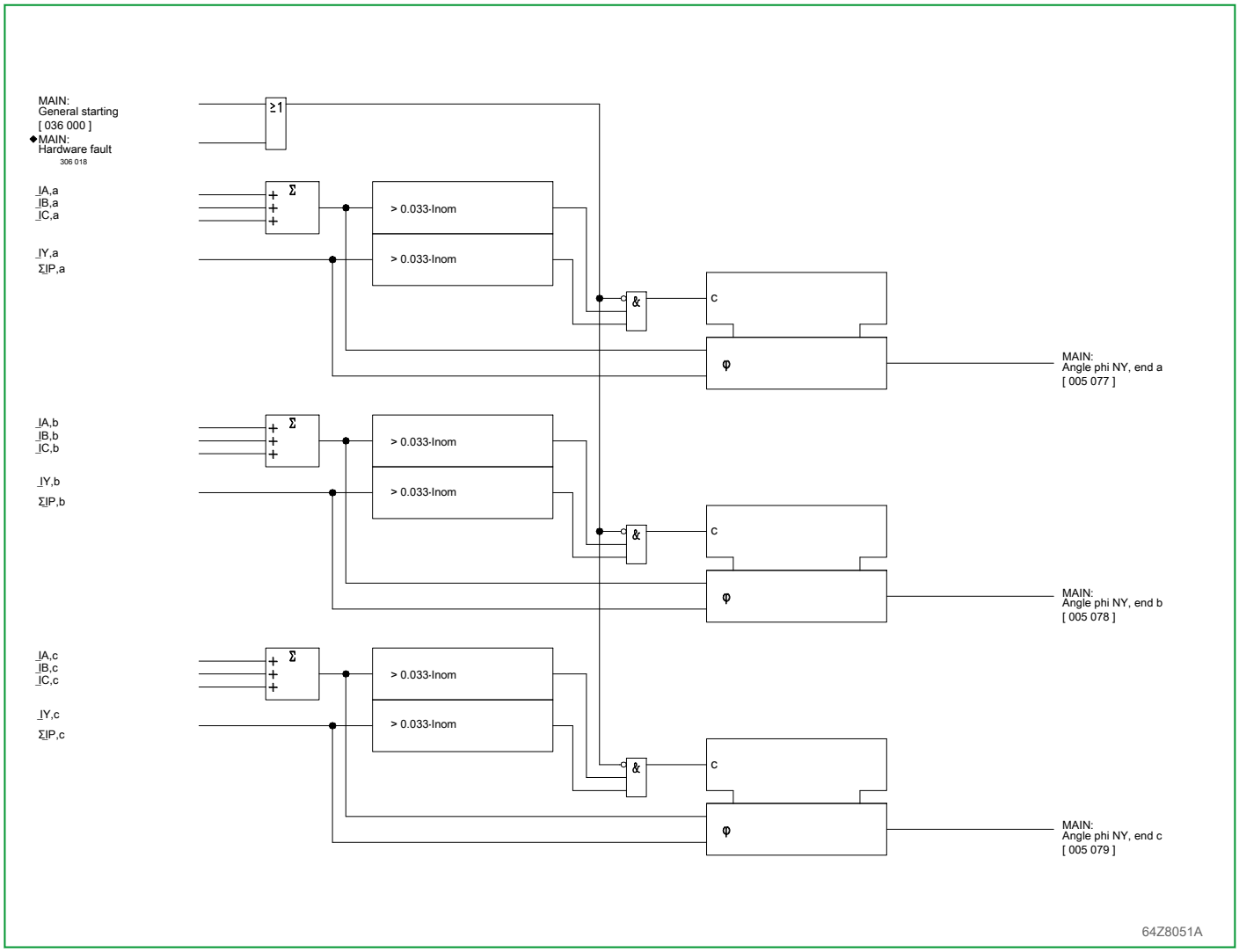

Fig. 3-62: Determination of the angle between the derived residual current and the current measured at transformer -Tx4

3.13.7 Configuring and Enabling the Device Functions

The P633 can be adapted to the requirements of a specific high-voltage system by configuring the available function range. By including the desired P633 functions in the configuration and canceling all other, the user creates an individually configured device appropriate to the specific application. Parameters, signals and measured values of cancelled device functions are not displayed on the local control panel. Functions of general applicability such as operating data recording (OP_RC) or main functions (MAIN) cannot be cancelled.

3.13.7.1 Canceling a Device Function

The following conditions must be met before a P633 function can be cancelled or removed:

- The P633 function must be disabled.
- None of the functions of the P633 function to be cancelled can be assigned to a binary input.
- None of the signals of the P633 function can be assigned to a binary output or an LED indicator.
- None of the functions of the P633 function to be cancelled may be selected in a list parameter setting.

If the above conditions are met, proceed through the “Configuration” branch of the menu tree to access the setting relevant for the P633 function to be cancelled. If, for example, the “LIMIT” function group is to be cancelled, the setting of LIMIT: Function group LIMIT is set to *Without*. To re-include the “LIMIT” function in the P633 configuration, the same setting is accessed and its value is changed to *With*.

The P633 function to which a setting, a signal, or a measured value belongs is defined by the function group designation (example: “LIMIT”). In the following description of the P633 functions, it is presumed that the corresponding P633 function is included in the configuration.

3.13.7.2 Enabling or Disabling a Device Function

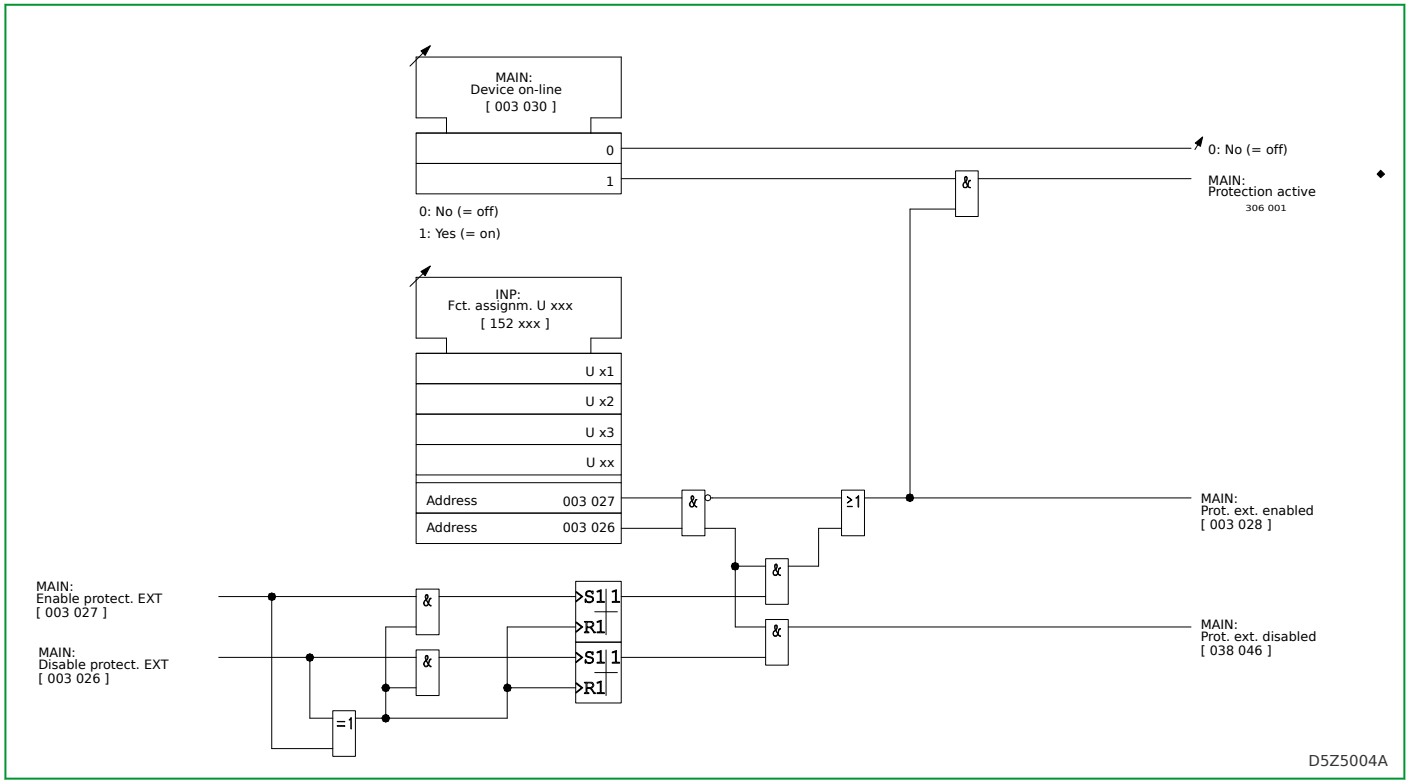

Fig. 3-63: Enabling or disabling a device function.

Besides cancelling P633 functions from the configuration, it is also possible to disable protection via a function parameter or binary signal inputs. Protection can only be disabled or enabled through binary signal inputs if the MAIN: Disable protect. EXT and MAIN: Enable protect. EXT functions are both configured. When neither or only one of the two functions is configured, the condition is interpreted as “Protection externally enabled”. If the triggering signals of the binary signal inputs are implausible – i.e. both are at logic level = “1” – then the last plausible state remains stored in memory.

> *If the protection is disabled via a binary signal input that is configured for MAIN: Disable protect. EXT, the signal MAIN: Blocked/faulty is not issued.*

3.13.8 Activation of “Dynamic Parameters”

For several of the protection functions, it is possible for the duration of the set hold time to switch over to other settings – the “dynamic parameters” – via an appropriately configured binary signal input. If the hold time is set to 0 s, switching is effective as long as the binary signal input is being triggered.

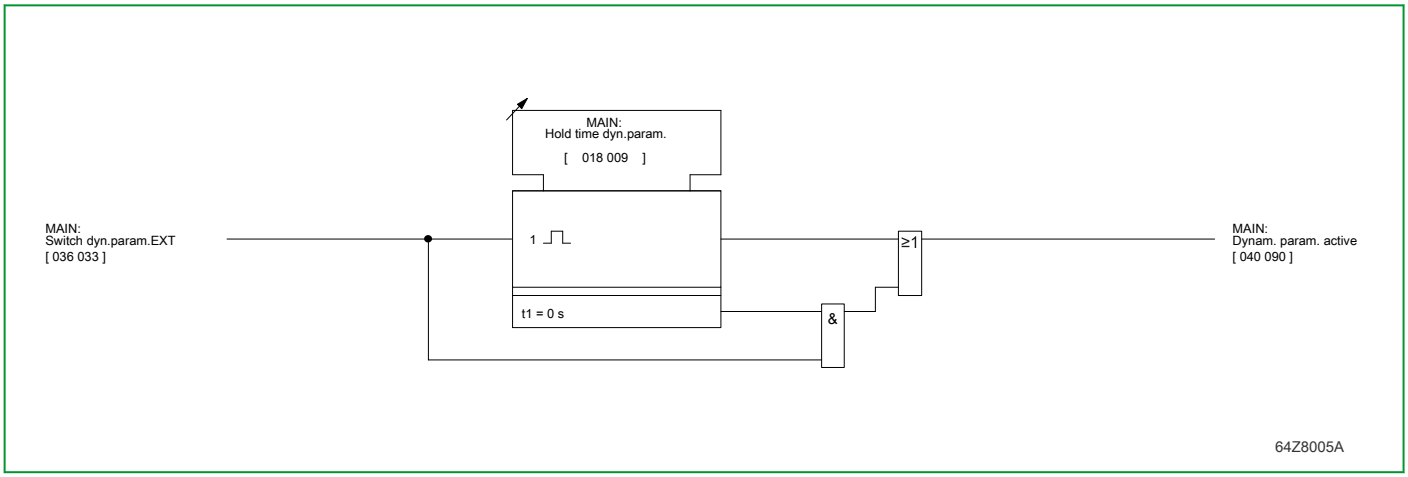

Fig. 3-64: Activation of “Dynamic Parameters”.

3.13.9 Function Blockings

By including function blockings in the bay interlock conditions, switching operations can be prevented independent of the switching status at the time, for example, by an external signal “CB drive not ready” or by the trip command from an external protection device.

Binary input signals conditioned by debouncing and chatter suppression or output signals from the programmable logic function can be assigned to the function blockings 1 and 2 by setting a ‘1 out of n’ parameter. The input signal from the function blockings starts a timer stage and after it has elapsed, the signal MAIN: Fct. block. 1 active or MAIN: Fct. block. 2 active is issued.

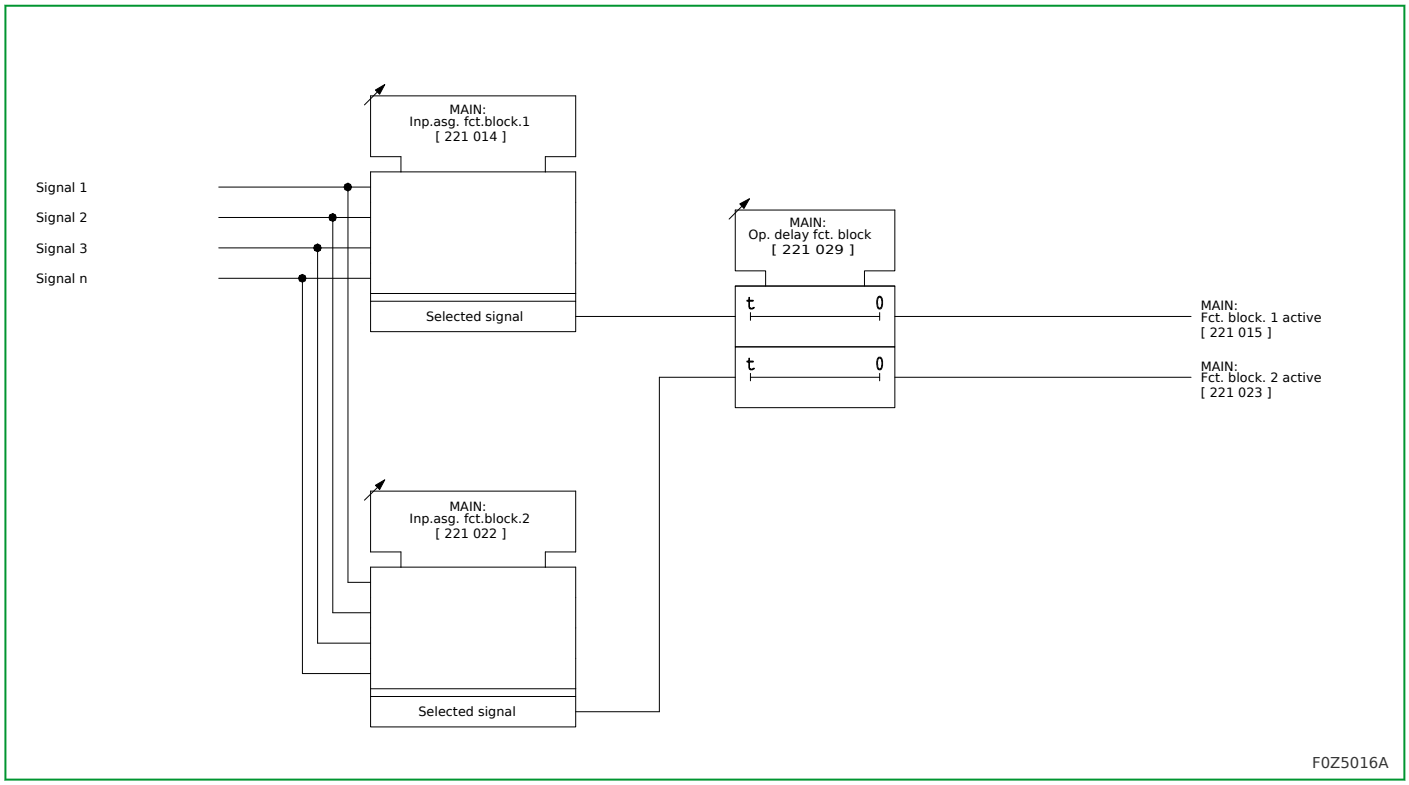

Fig. 3-65: Function blockings

3.13.10 Multiple Blocking

Four multiple blocking conditions can be defined via “m out of n” parameters. The functions defined by selection may be blocked via an appropriately configured binary signal input.

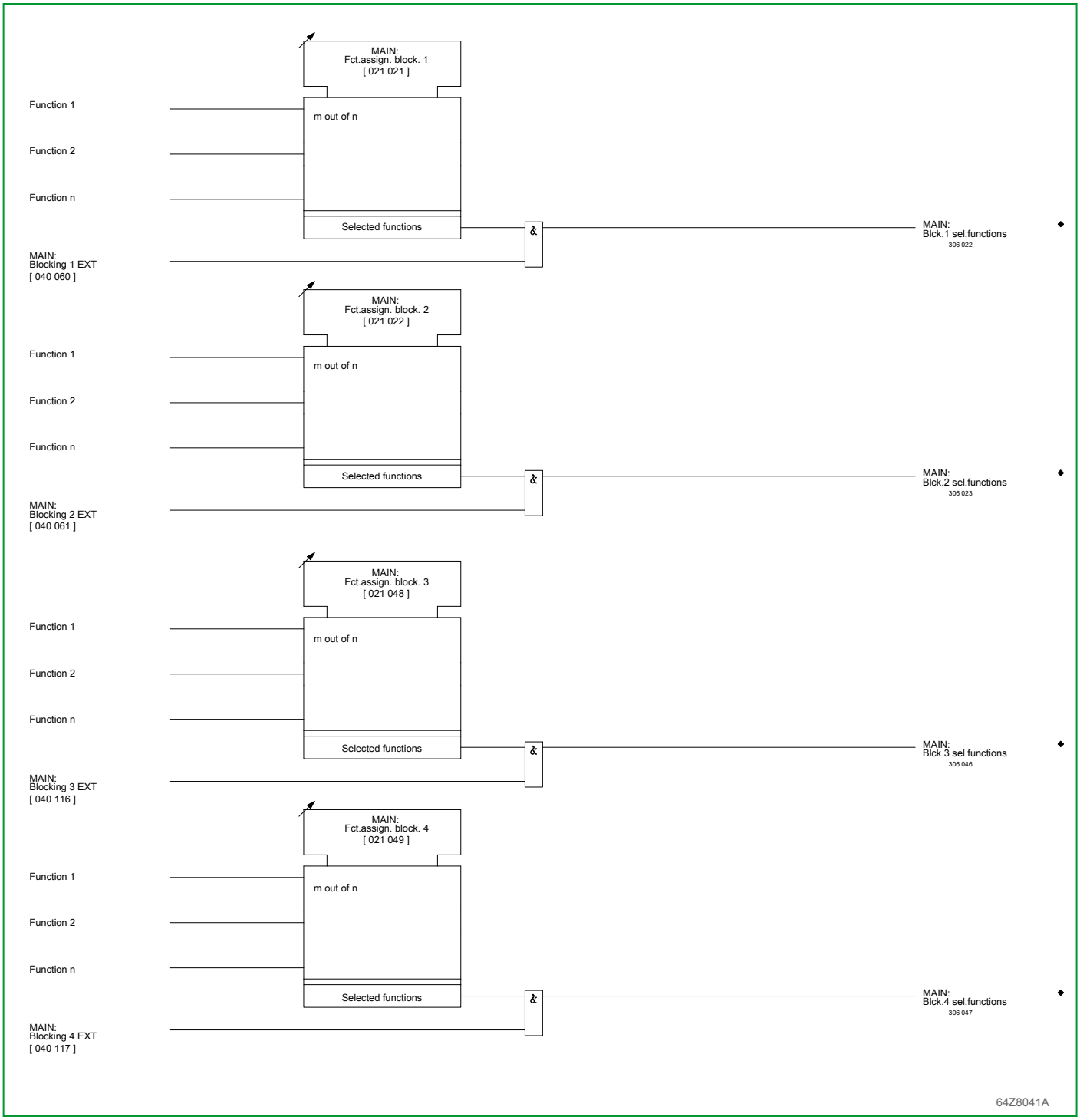

Fig. 3-66: Multiple blocking.

3.13.11 Blocked/Faulty

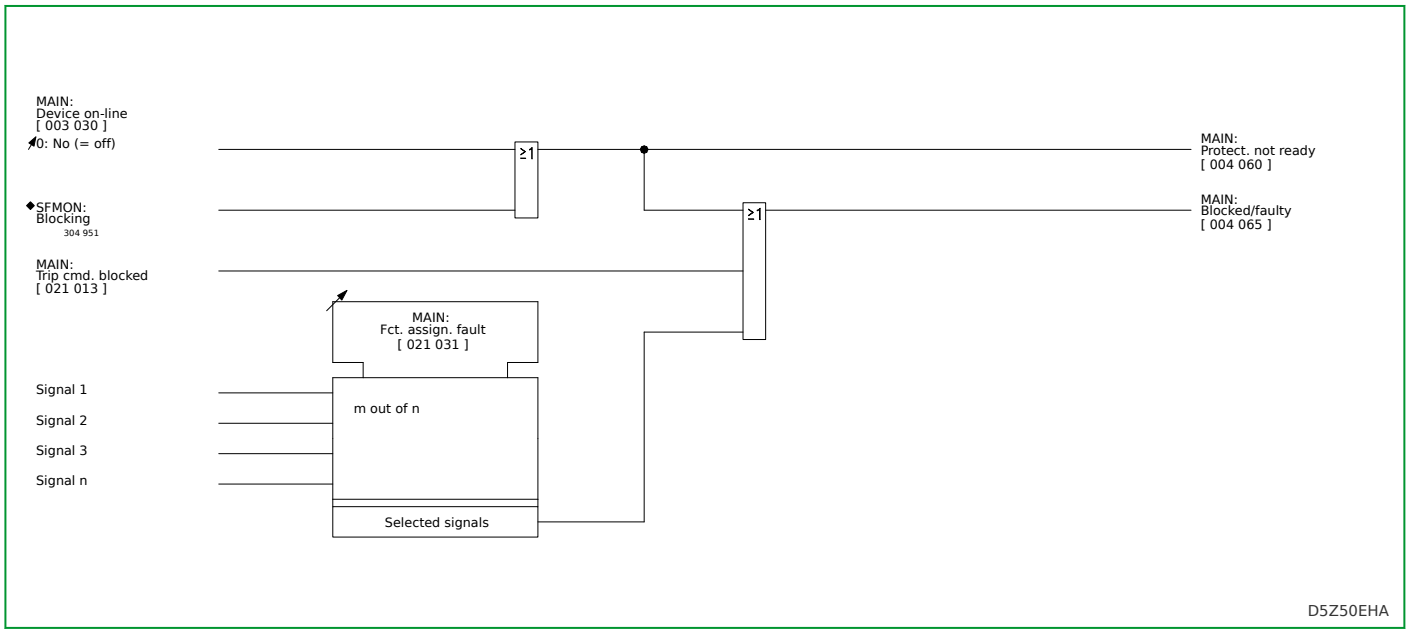

Fig. 3-67: “Blocked/Faulty” signal.

If the protective functions are blocked, the condition is signaled by continuous illumination of the amber LED indicator H 2 on the local control panel and by a signal from an output relay configured MAIN: Blocked/faulty. In addition functions can be selected that will issue the MAIN: Blocked/faulty signal by setting a “m out of n” parameter.

3.13.12 Coupling between Control and Protection for the CB Signals

Bay type selection defines the external device (DEV01 or DEV02 or ...) that represents the circuit breaker. For the P633, 3 circuit breakers are available. CB1 is used as an example in the following description.

Coupling between control and protection for the “Closed” position signal is made by the setting at MAIN: Sig. asg. CB1 closed. In the same way coupling between control and protection for the “Open” position signal is made by the setting at MAIN: Sig. asg. CB1 open. As a result, the CB status signal needs to be assigned to a binary signal input only if this coupling is implemented.

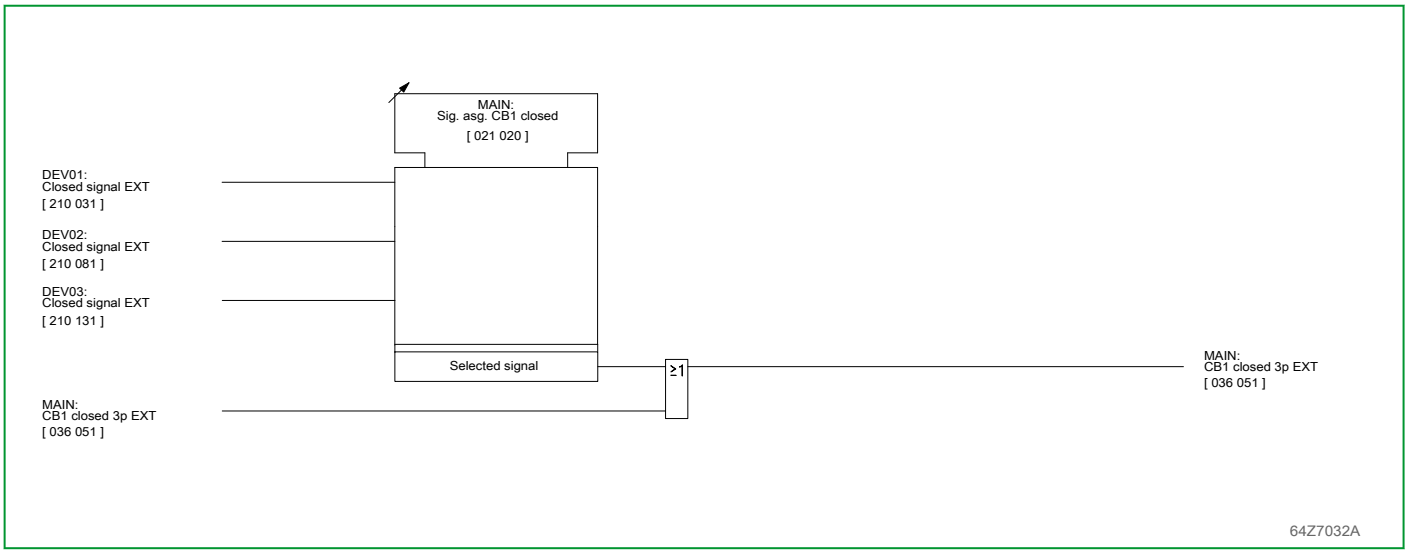

Fig. 3-68: Coupling between control and protection for the CB closed signal

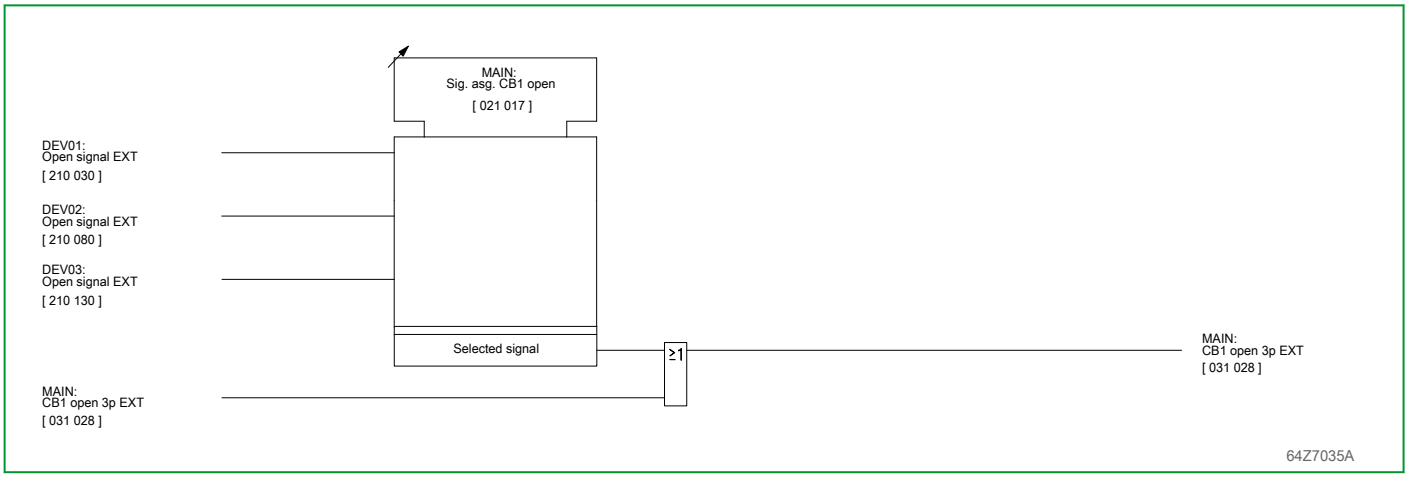

Fig. 3-69: Coupling between control and protection for the CB open signal

3.13.13 Multiple Signaling

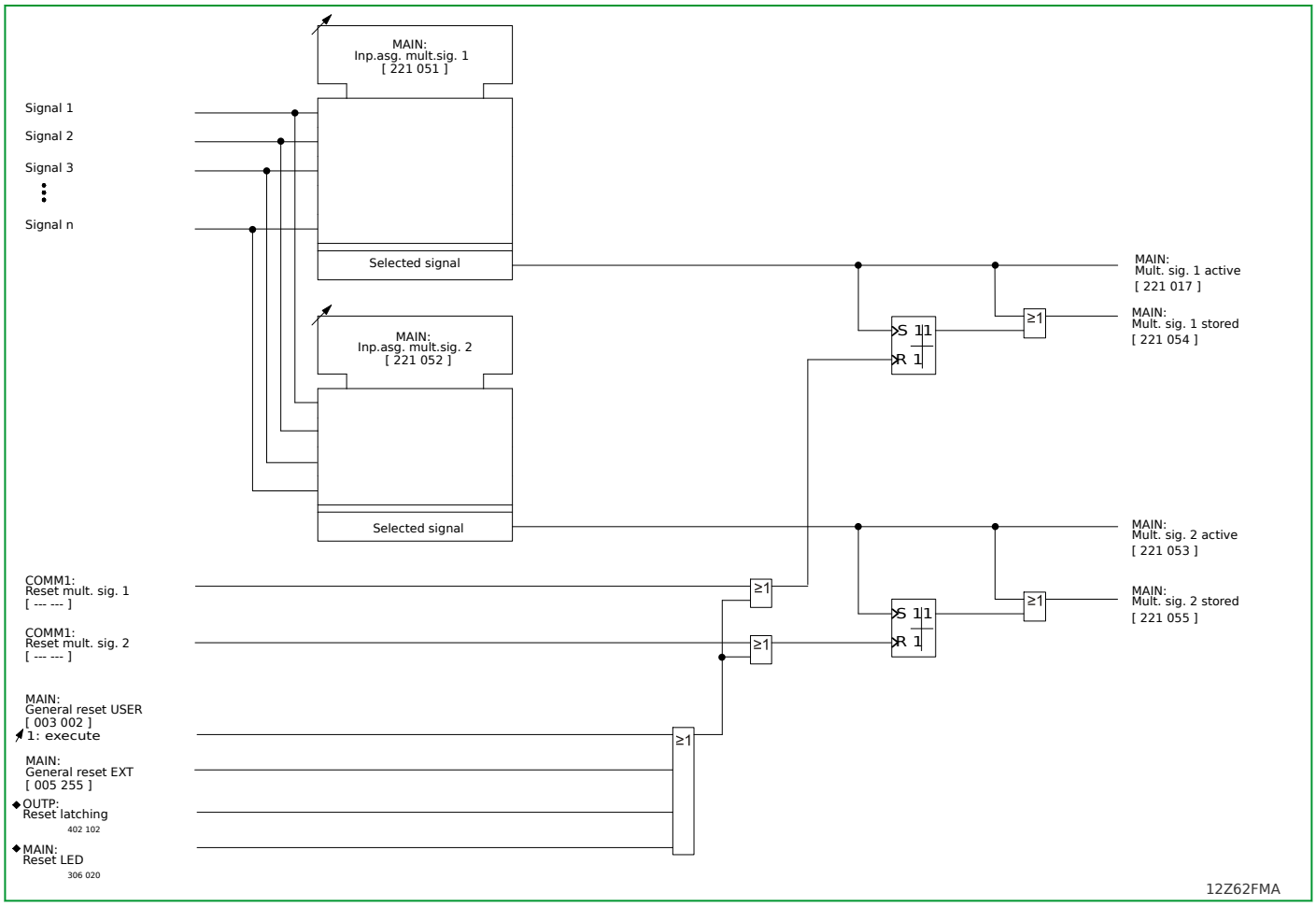

Fig. 3-70: Multiple signaling.

The multiple signals 1 and 2 are formed by the programmable logic function using *OR* operators. The programmable logic output to be interpreted as multiple signaling is defined by the configuration of the binary signal input assignment with the corresponding multiple signaling. Both an updated and a stored signal are generated. The stored signal is reset by the following actions:

- General reset
- Latching reset
- LED indicators reset
- A command received through the communication interface

If the multiple signaling is still present at the time of a reset, the stored signal will follow the updated signal.

Additionally 8 user configurable group signals are available (MAIN: Group signal 01 to MAIN: Group signal 08). For each of these signals the user can select up to 32 internal signals and freely combine them using Boolean operators NOT, AND, OR (settings MAIN: Fct.asg. grp.sig. 01 to MAIN: Fct.asg. grp.sig. 08), as described for configuration of LOGIC outputs (see Fig. 3-187, (p. 3-236)).

These state signals are continuously updated. They provide no latching and no settable pick up/ release delay timers. If such timed signaling is required, the function groups LOGIC or LOG_2 shall be used.

3.13.14 Multiple Signaling of the Measuring Circuit Monitoring Function

Signals issued by the measuring circuit monitoring (MCMON) function are combined to one signal in function group MAIN.

Fig. 3-71: Signals issued by measuring circuit monitoring

3.13.15 Starting Signals and Tripping Logic

3.13.15.1 Tripping Signals for Autotransformers

The following tripping signals are available for applications with autotransformers:

MAIN: Trip sig.REF1 & REF2	036 174
MAIN: Trip sig.REF2 & REF3	036 175
MAIN: Trip sig.REF1 & REF3	036 176

For signaling (e.g. via LED) an additional group signal (019 200) "MAIN: REFn trip signal" is provided, which is formed by OR-combination of the trip signals of all available REF protections.

3.13.15.2 Starting Signals

The trip signals of differential protection and ground differential protection plus the general starting signals of the definite-time and inverse-time overcurrent protection functions are combined into one common general starting signal.

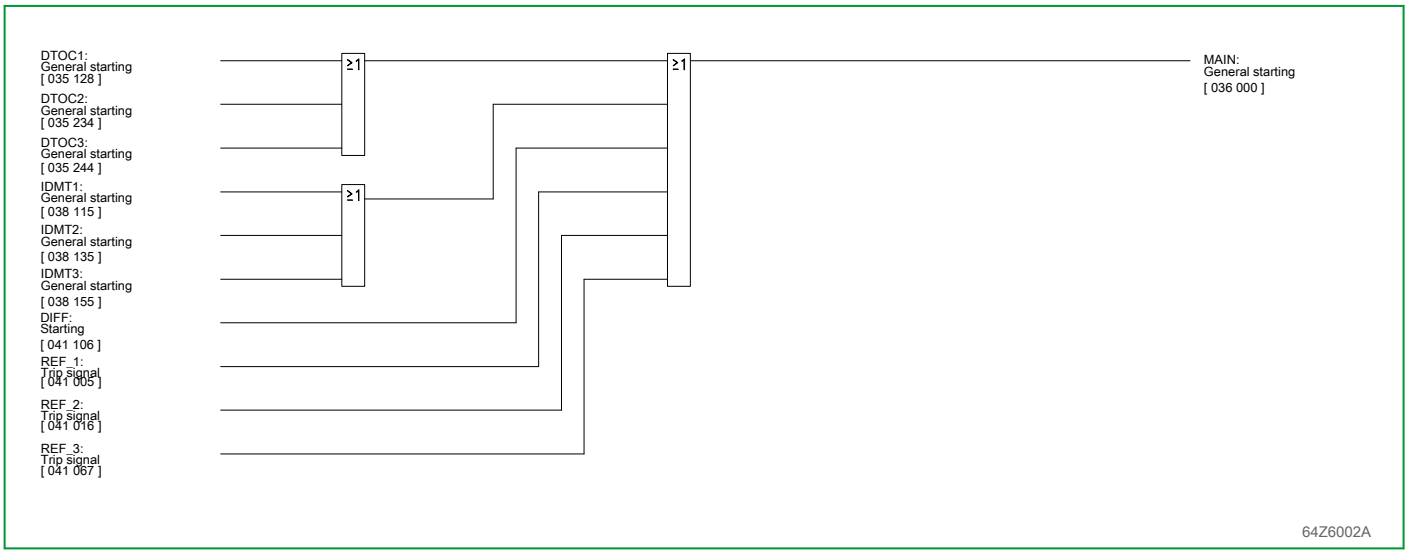

Fig. 3-72: General starting of the P633

3.13.15.3 Counter of Starting Signals

The general starting signals are counted. The counter can be reset individually.

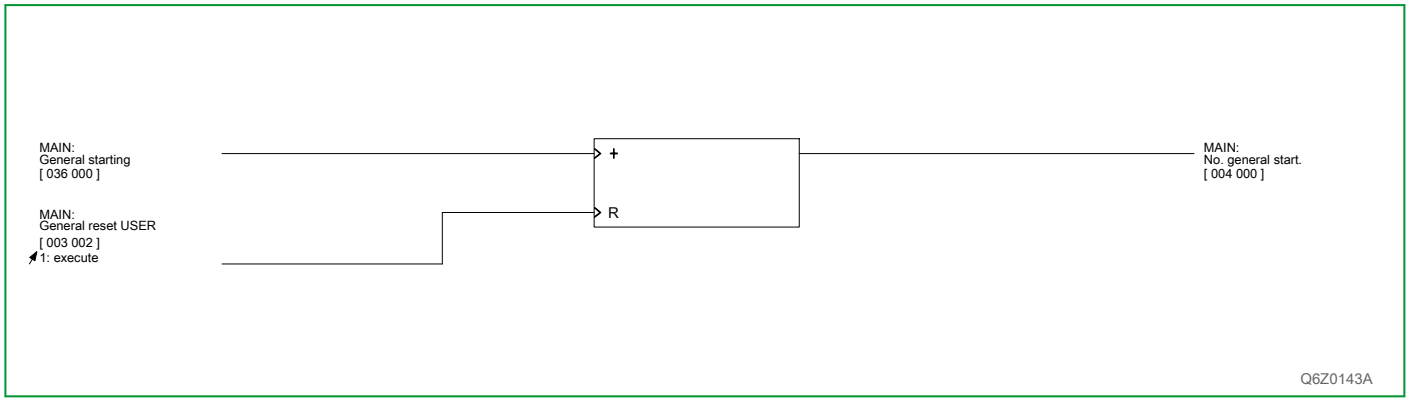

Fig. 3-73: Counter for general starting signals

3.13.15.4 Trip Command

The P633 has four trip commands. The functions to effect a trip can be selected by setting an ‘m out of n’ parameter independently for each of the four trip commands. The minimum trip command time may be set. The trip signals are present only as long as the conditions for the signal are met.

The following diagram shows the configuration of the trip commands, using the trip command 1 as an example. The parameters given apply to trip command 1. The corresponding parameters of the other trip commands are given in Chapter 7, (p. 7-1) and Chapter 8, (p. 8-1).

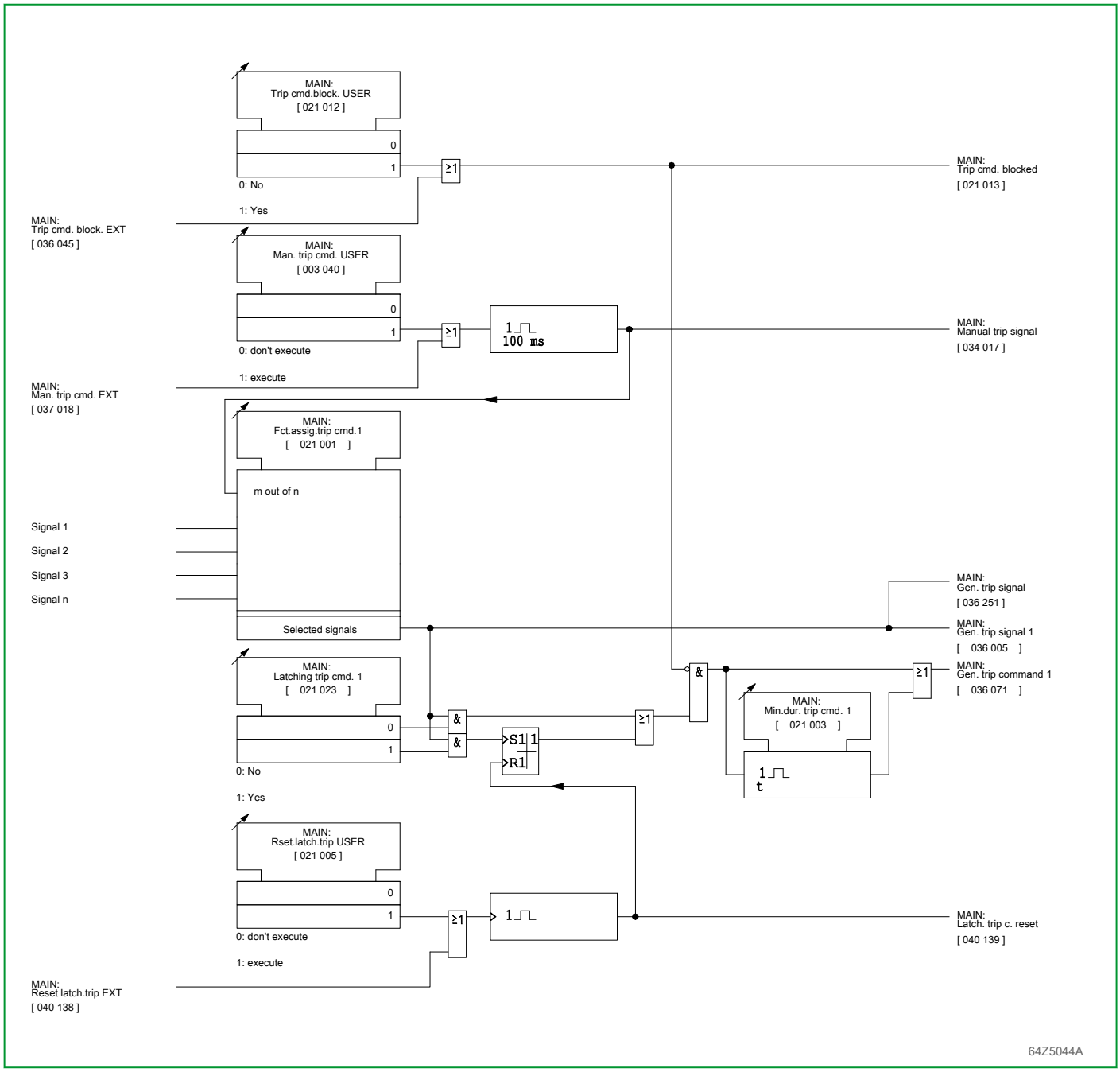

Fig. 3-74: Forming the trip commands

3.13.15.5 Manual Trip Command

A manual trip command may be issued via a parameter or a binary signal input configured accordingly, but it is not executed unless the manual trip is included in the selection of possible functions to cause a trip.

3.13.15.6 Latching of the Trip Commands

For each of the four trip commands, the user can specify by way of the appropriate setting whether it will operate in latching mode. The trip command, set to latch mode, will remain active until reset by parameters or reset through an appropriately configured binary signal input.

3.13.15.7 Blocking of the Trip Commands

The trip commands can be blocked via parameters or an appropriately configured binary signal input. This blocking is then effective for all four trip commands. The trip signals are not affected by this blocking. If the trip commands are blocked, it is indicated by the continuously illuminated amber LED indicator H 2 on the local control panel and by a signal from an output relay configured to “Blocked/Faulty”. (To identify H 2, see the dimensional drawings in the Chapter 4, (p. 4-1).)

3.13.15.8 Counter of Trip Commands

The number of trip commands is counted. The counters can be reset either individually or as a group.

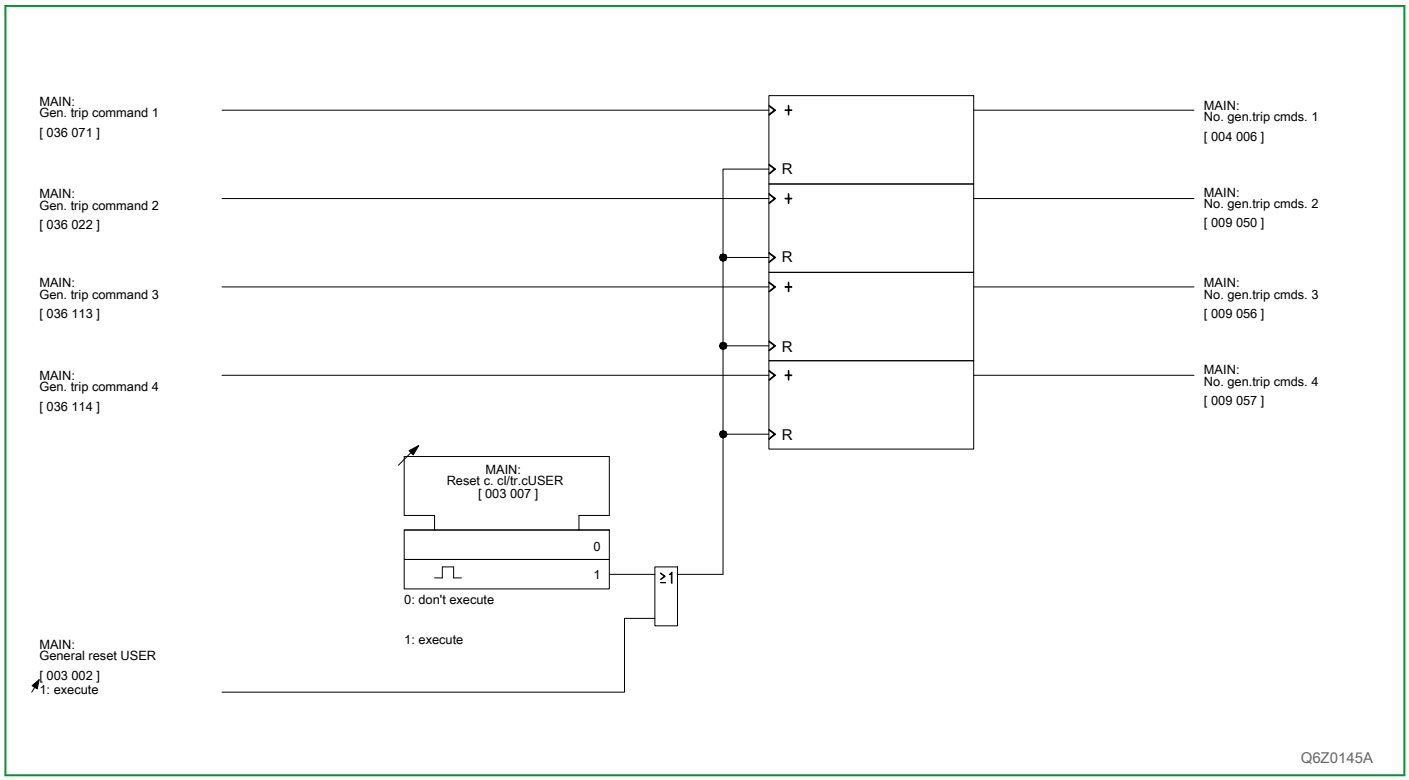

Fig. 3-75: Counter of trip commands

3.13.16 Communication Error

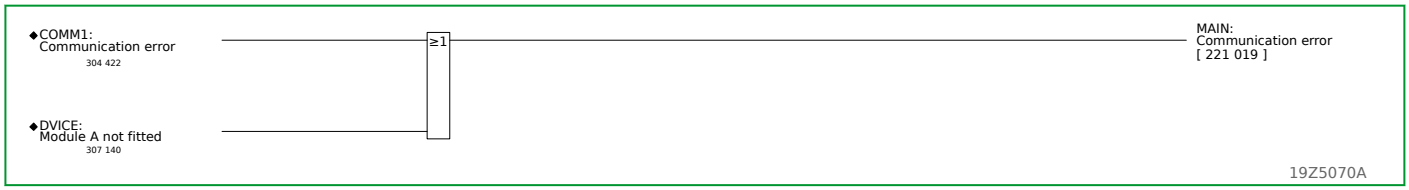

Fig. 3-76: Communication Error.

If a link to the control station cannot be established or if the link is interrupted, the signal *“Communication error”* will be issued. This signal will also be issued if communication module A is not fitted.

3.13.17 Time Tagging and Clock Synchronization

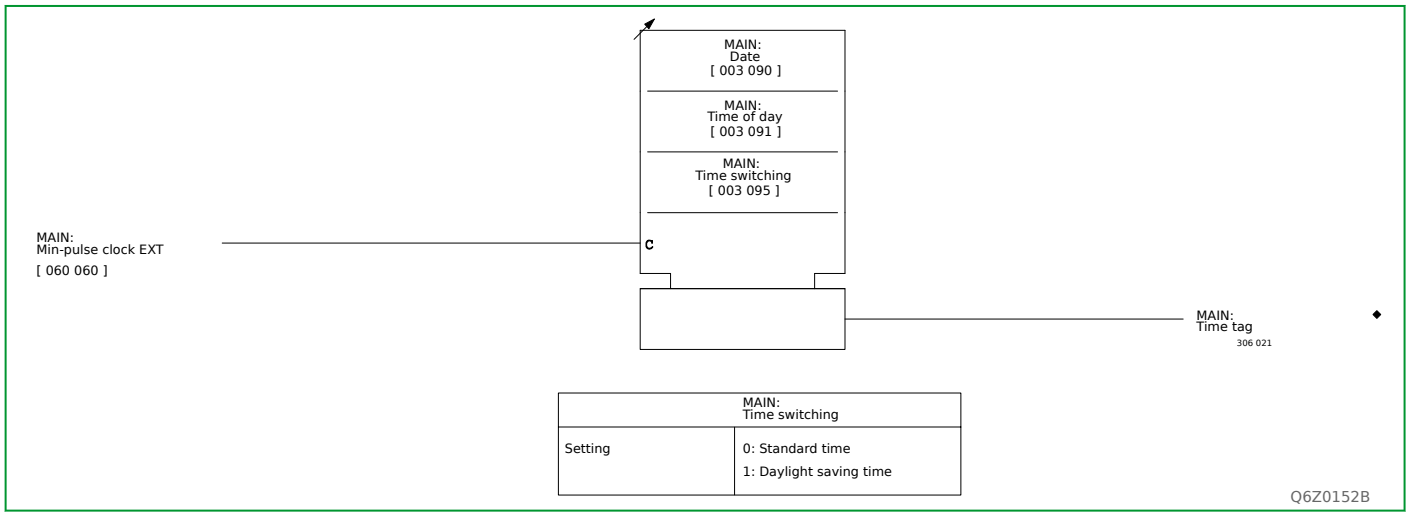

Fig. 3-77: Date/time setting and clock synchronization with minute pulses presented at a binary signal input.

Switching from standard to daylight saving time or back requires correct time setting frames from the time synchronization master (according the applied communication protocol).

The data stored in the operating data memory, the monitoring signal memory and the event memories are date- and time-tagged. For correct tagging, the date and time need to be set in the P633.

The time of different devices may be synchronized by a pulse given to an appropriately configured binary signal input. The P633 evaluates the rising edge. This will set the clock to the nearest full minute, rounding either up or down. If several start/end signals occur (bouncing of a relay contact), only the last edge is evaluated.

3.13.17.1 Priority Control of Time Synchronization

The protection device provides several ways of synchronizing the internal clock:

- Telegram with the time of day via the communication interface COMM1/IEC (full time)
- Telegram with the time of day via the communication interface COMM2/PC (full time)
- IRIG-B Signal (IRIGB; time of day only)
- Impulse every minute via a binary signal input (MAIN), see Fig. 3-77, (p. 3-112) and the preceding section.

A primary and a backup source for time of day synchronization may be set, where both provide the four options listed above.

MAIN: Prim.Source TimeSync

MAIN: BackupSourceTimeSync

With this feature synchronization occurs continuously from the primary source as long as time synchronization telegrams are received within a time-out period set at MAIN: Time sync. time-out.

When selecting the time telegram via IEC as the primary source the device will expect time synchronization telegrams from server SNTP 2 after server SNTP 1 has become defective, before it will switch over to the backup source.

Time synchronization occurs solely from the primary source when the time-out stage is blocked.

3.13.18 Resetting Actions

Stored data such as event logs, measured fault data etc, can be cleared in several ways. The following types of resetting actions are possible:

- Automatic resetting of the event signals provided by LED indicators (given that the LED operating mode has been set accordingly) and of the display of measured event data on the local control panel LCD whenever a new event occurs. In this case only the displays on the local control panel LCD are cleared but not the internal memories such as the fault memory.
- Resetting of LED indicators and measured event data displayed on the local control panel LCD by pressing the “Clear” key ⓒ located on the local control panel. By selecting the required function at LOC: Fct. reset key further memories may be assigned which will then also be cleared when the “Clear” key is pressed.
- Selective resetting of a particular memory type (e.g. only the fault memory) via setting parameters. (For this example: Navigate to menu point FT_RC: Reset record. USER and set to *execute*, see also the exact step-by-step description in Section 6.13.7, (p. 6-35).)
- Selective resetting of a particular memory type (e.g. only the fault memory) through appropriately configured binary signal inputs. (For this example: Assign parameter FT_RC: Reset record. EXT to the relevant binary signal input e.g. INP: Fct. assignm. U xxx .)
- Group resetting by setting parameters, by navigating to menu point MAIN: Group reset 1 USER (or MAIN: Group reset 2 USER) and setting it to *execute*. For this the relevant memories (i.e. those to be reset) must be assigned to parameter MAIN: Fct.assign. reset 1 (or MAIN: Fct.assign. reset 2, resp.)
- Group resetting through appropriately configured binary signal inputs. (That is assign parameter MAIN: Group reset 1 EXT (or MAIN: Group reset 2 EXT) to the relevant binary signal input, e.g. INP: Fct. assignm. U xxx after memories to be reset have been assigned to parameter MAIN: Fct.assign. reset 1 (or MAIN: Fct.assign. reset 2).
- General resetting by setting parameters (menu point MAIN: General reset USER). All memories, counters, events etc. are reset without any special configuration options.
- General resetting through appropriately configured binary signal inputs. (MAIN: General reset EXT is assigned to the relevant binary signal input.) All memories, counters, events etc. are reset without any special configuration options.

Should several resetting actions have been configured for one particular memory then they all have equal priority.

In the event of a cold restart or simultaneous failure of both internal battery and substation auxiliary supply, all stored counter values will be lost.

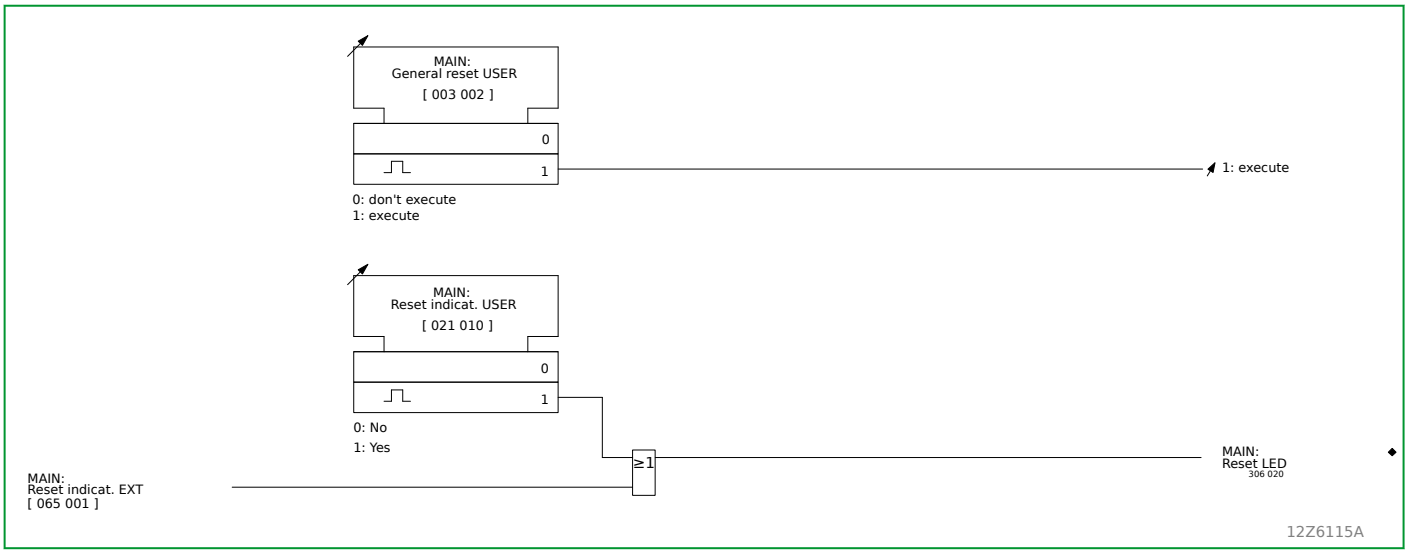

Fig. 3-78: General reset, LED reset and measured event data reset from the local control panel

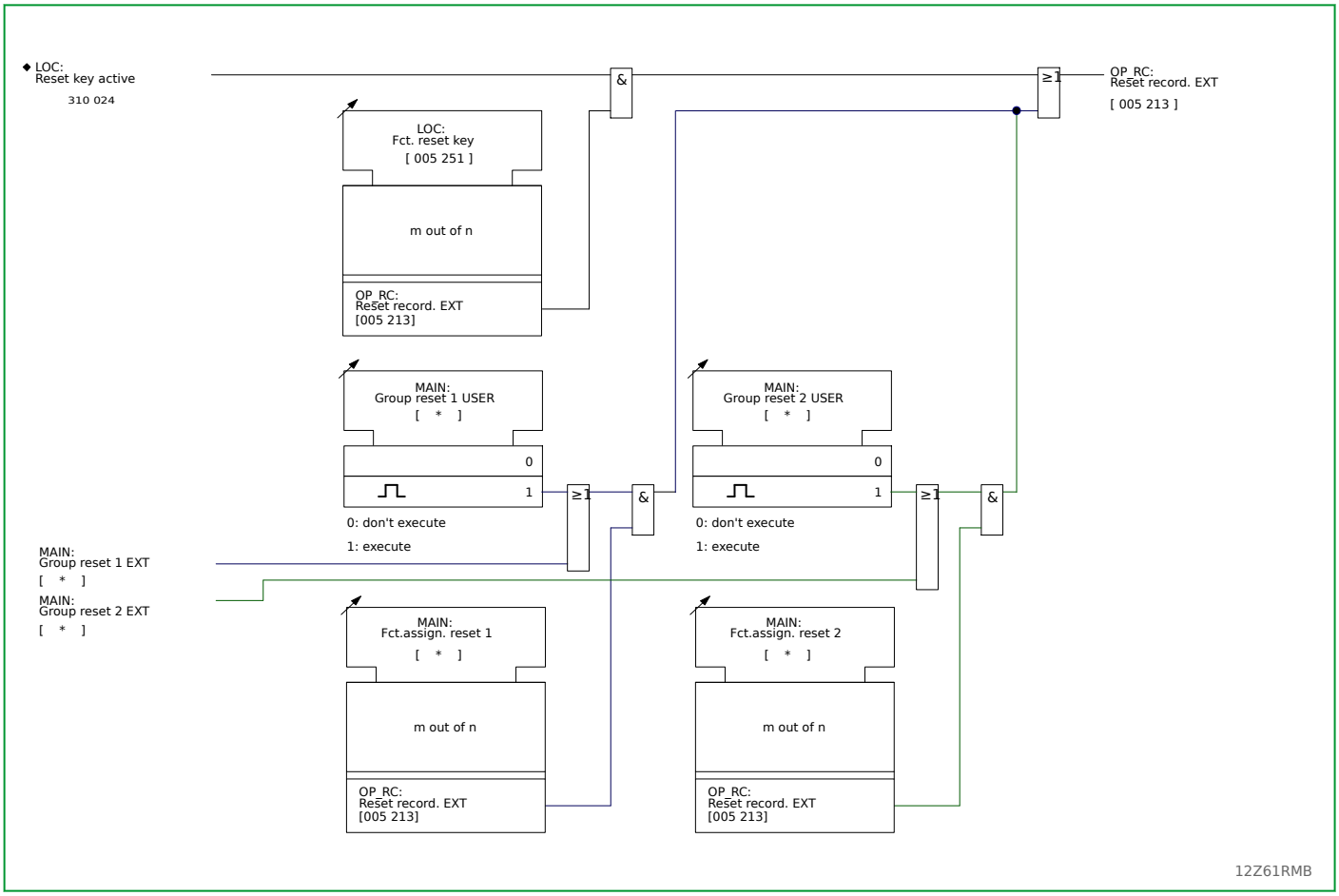

Fig. 3-79: "CLEAR" key on the local control panel and, as an example, group resetting of the operating data recording (e.g. as an example for the reset signal OP_RC: Reset record. EXT.

A complete list of all resetting parameters that can be used in the way shown in Fig. 3-79, (p. 3-114) can be obtained from the separately available DataModelExplorer: Look up the setting parameter MAIN: Fct.assign. reset 1 in the file *P633-661_en_Addresses.pdf*, and there follow the link to the referenced config. table.

3.13.18.1 Resetting Actions through Keys on the Local Control Panel

Further resetting possibilities are basically not distinct resetting actions but make access especially easy to one of the resetting actions described above i.e. by configuring them to a configurable key.

- One can include the relevant resetting action in the configuration of the “READ” (ⓜ) key (through `LOC: Fct. read key`).

3.13.19 Assigning Communications Interfaces to Physical Communications Channels

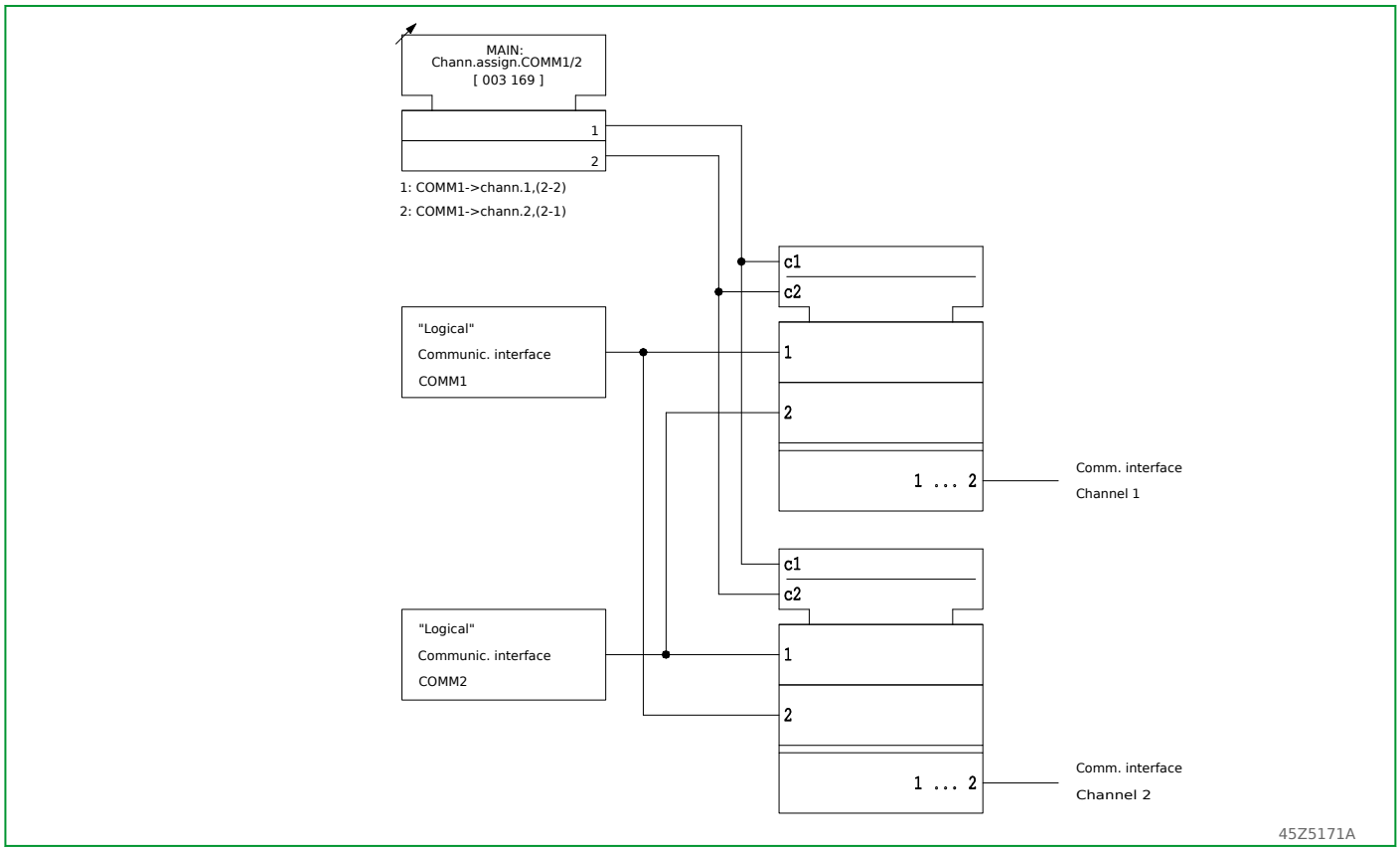

Fig. 3-80: Assignment of communication interfaces to physical communication channels.

Depending on the design version of the communications module A there are up to two communications channels available (see “Technical Data”, Chapter 2, (p. 2-1)). These physical communications channels may be assigned to communications interfaces COMM1 and COMM2.

If communications interface COMM1 is assigned to communications channel 2, then the settings of communications interface COMM2 are automatically assigned to communications channel 1.

COMM2 can only be used to transmit data to and from the P633 if its PC interface has been de-activated. As soon as the PC interface is used to transmit data, COMM2 becomes “dead”. It will only be enabled again when the “time-out” period for the PC interface has elapsed.

3.13.20 Test Mode

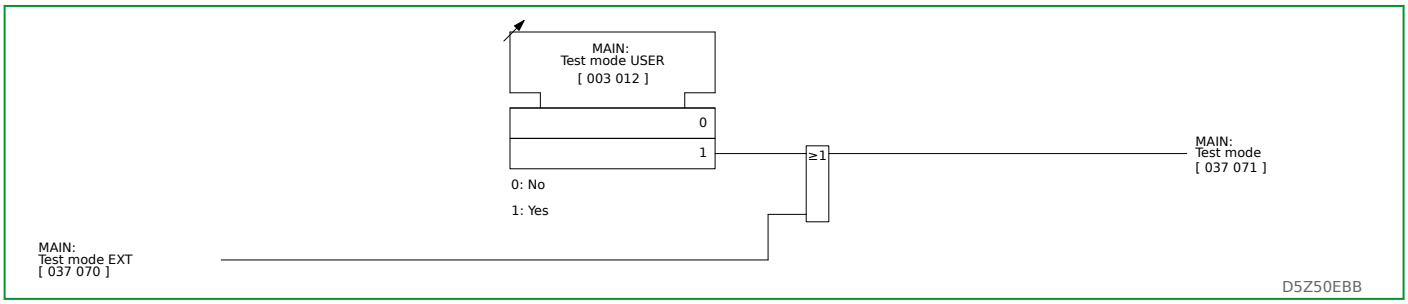

Fig. 3-81: Setting the test mode.

If tests are run on the P633, the user is advised to activate the test mode so that all incoming signals via the serial interfaces will be identified accordingly.

3.14 Parameter Subset Selection (Function Group PSS)

With the P633, four independent parameter subsets may be pre-set. The user may switch between parameter subsets during operation without interrupting the protection function.

Selecting the Parameter Subset

The control path determining the active parameter subset (function setting or binary signal input) may be selected via the function setting PSS: Control via USER or via the external signal PSS: Control via user EXT. Correspondingly, the parameter subset is selected either in accordance with the pre-set function setting PSS: Param.subs.sel. USER or in accordance with external signals. Which parameter subset is actually active at a particular time may be determined by scanning the logic state signals PSS: Actual param. subset or PSS: PS 1 active.

Selecting the Parameter Subset via Binary Inputs

If the binary signal inputs are to be used for parameter subset selection, then the P633 first checks to determine whether at least two binary inputs are configured for parameter subset selection. If this is not the case, then the parameter subset selected via the function setting will be active. The P633 also checks whether the signals present at the binary signal inputs allow an unambiguous parameter subset selection. This is only true when only one binary signal input is set to a logic level of “1”. If more than one signal input is set to a logic level of “1”, then the parameter subset previously selected remains active. Should a dead interval occur while switching between parameter subsets (this is the case if all binary signal inputs have a logic level of “0”), then the stored hold time is started. While this timer stage is running, the previously selected parameter subset remains active. As soon as a signal input has a logic level of “1”, the associated parameter subset becomes active. If, after the stored time has elapsed, there is still no signal input with a logic level of “1”, the parameter subset selected via the function parameter becomes active.

If, after the supply voltage is turned on, no logic level of “1” is present at any of the binary signal inputs selected for the parameter subset selection, then the parameter subset selected via the function parameter will become active once the stored time has elapsed. The previous parameter subset remains active while the stored hold timer stage is running.

Parameter subset selection may also occur during a starting condition. When subset selection is handled via binary signal inputs, a maximum inherent delay of approximately 100 ms must be taken into account.

Settings for which only one address is given in the following sections are equally effective for all four parameter subsets.

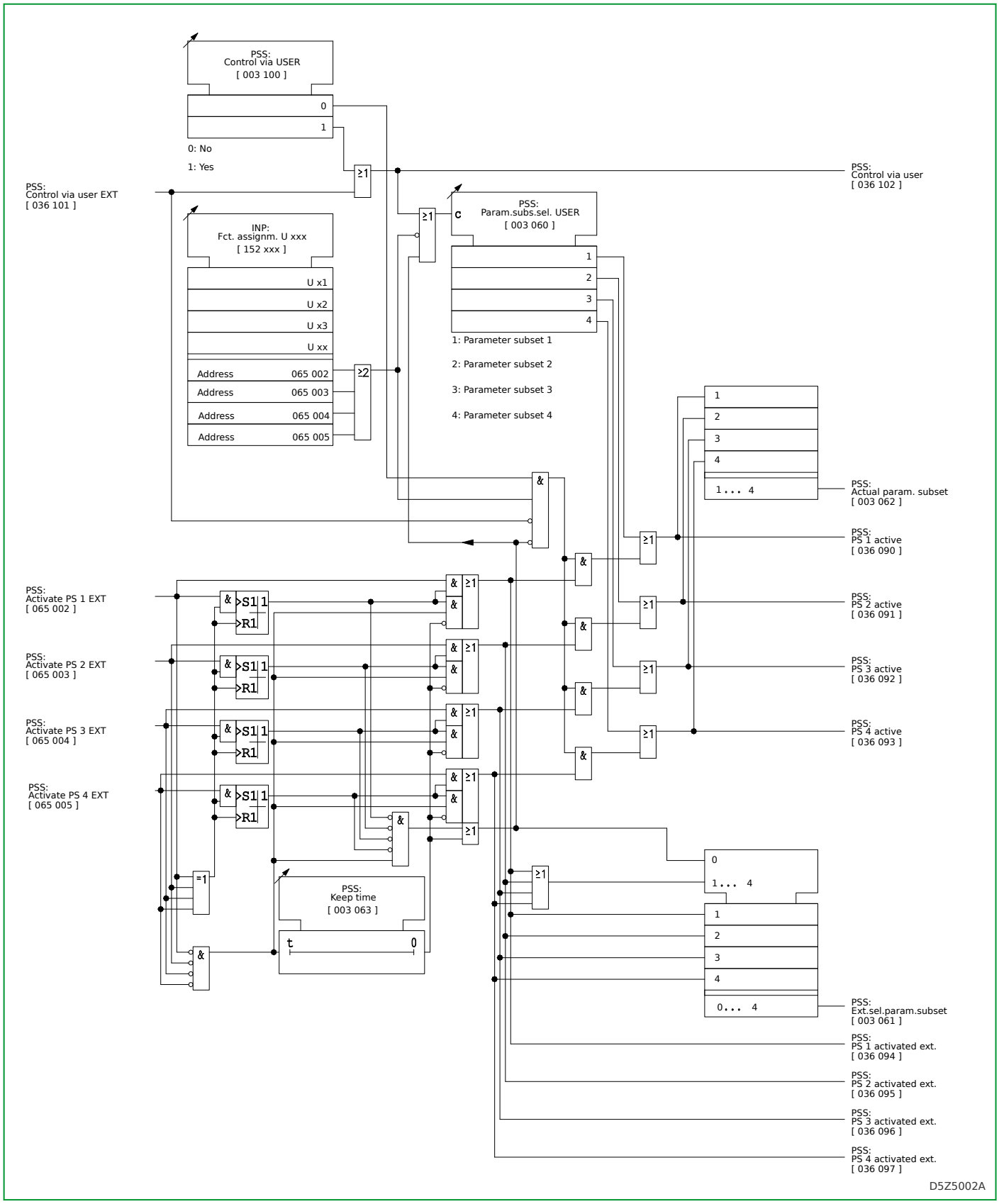

Fig. 3-82: Activating the parameter subsets.

3.15 Self-Monitoring (Function Group SFMON)

Comprehensive monitoring routines in the P633 ensure that internal faults are detected and do not lead to malfunctions. The selection of function assignments to the alarm signal includes, among others, self-monitoring signals from the communications monitor, measuring-circuit monitoring, open-circuit monitoring and the logic outputs.

3.15.1 Tests During Start-up

After the supply voltage has been turned on, various tests are carried out to verify full operability of the P633. If the P633 detects a fault in one of the tests, then start-up is terminated. The display shows which test was running when termination occurred. No control actions may be carried out. A new attempt to start up the P633 can only be initiated by turning the supply voltage off and then on again.

3.15.2 Cyclic Tests

After start-up has been successfully completed, cyclic self-monitoring tests will be run during operation. In the event of a positive test result, a specified monitoring signal will be issued and stored in a non-volatile(NV) memory – the monitoring signal memory – along with the assigned date and time (see Section 3.17, (p. 3-123)).

The self-monitoring function monitors the built-in battery for any drop below the minimum acceptable voltage level. If the associated monitoring signal is displayed, then the power supply module should be replaced within a month, since otherwise there is the danger of data loss if the supply voltage should fail. Section 12.1, (p. 12-2) gives further information on maintenance procedures.

3.15.3 Signals

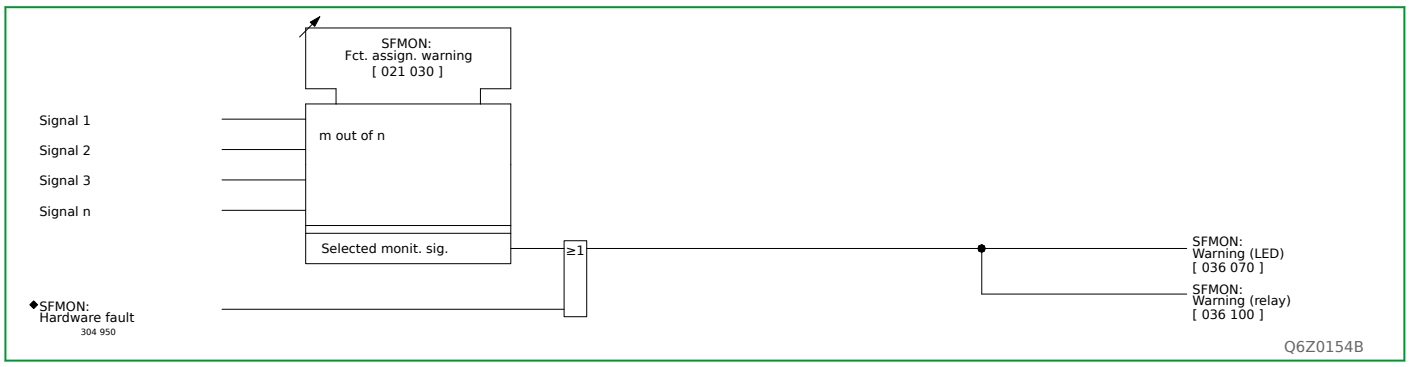

Fig. 3-83: Monitoring signals.

The monitoring signals are also signaled via the output relay configured SFMON: Warning (relay). The output relay operates as long as an internal fault is detected.

> *Note: It is strongly recommended to use an output relay of the power supply module for signaling “blocked/faulty” state (so-called watchdog relay).*

3.15.4 Device Response

The response of the P633 is dependent on the type of monitoring signal. The following responses are possible:

- Signaling Only

  If there is no malfunction associated with the monitoring signal, then only a signal is issued, and there are no further consequences. This situation exists, for example, when internal data acquisition memories overflow.

- Selective Blocking

  If a fault is diagnosed solely in an area that does not affect the protective functions, then only the affected area is blocked. This would apply, for example, to the detection of a fault on the communication module or in the area of the PC interface.

- Warm Restart

  If the self-monitoring function detects a fault that might be eliminated by a system restart – such as a fault caused by excessive electro-magnetic interference –, then a procedure called a warm restart is automatically initiated. During this procedure, as with any start-up, the computer system is reset to a defined state. A warm restart is characterized by the fact that no stored data and, in particular, no setting parameters are affected by the procedure. A warm restart can also be triggered manually by control action. During a warm restart sequence the protective functions and the communication through serial interfaces will be blocked.

  If the same fault is detected after a warm restart has been triggered by the self-monitoring system within the set SFMON: Mon.sig. retention, then the protective functions remain blocked but communication through the serial interfaces will usually be possible again.

  If a corrupted setting is diagnosed during the checksum test, which is part of the self-monitoring procedure, settings are restored from an internal back-up memory. Nevertheless, in order to get the device back to well defined operation conditions a warm restart is executed.

  For any warm restart initiated by self-monitoring, the root cause (alarm event) is logged in the monitoring buffer.

- Cold Restart

  In case the recovery of corrupted settings failed (e.g. because of an electrical defect of the memory chip), then a cold restart is carried out. This is necessary because the P633 cannot identify which parameter in the subset is corrupted. A cold restart causes all internal memories to be reset to a defined state. This means that all the protection device settings are also erased after a cold restart. In order to establish a safe initial state, the default values have been selected so that the protective functions are blocked. Both the monitoring signal that triggered the cold restart and the value indicating parameter loss are entered in the monitoring signal memory.

  A cold restart can also be triggered manually by control action (to intentionally erase all memories and reset the device to default settings).

3.15.5 Monitoring Signal Memory

Depending on the type of internal fault detected the P633 will respond by trying to eliminate the problem with a warm restart. (See above; for further details read also about P633 behavior with problems in Chapter 11, (p. 11-1).) Whether or not this measure will suffice can only be determined if the monitoring signal has not already been stored in the monitoring signal memory because of a previous fault. If it was already stored and a second fault is detected then, depending on the type of fault detected, the P633 will be blocked after the second warm restart.

In order to better monitor this behavior the parameter at SFMON: Mon.sig. retention is applied. This parameter may either be set to *'Blocked'* or to a time duration (in hours). (It is, however, discouraged to set it to 0, because in this case, there would be no blocking at all, so that there would be the danger of maloperation in case of a permanent failure.)

The default for this timer stage is *Blocked*, i.e. blocking of the protection device with two identical faults occurs independently of the time elapsed since the first fault monitoring signal was issued.

The behavior caused by sporadic faults could lead to an unwanted blocking of the P633 if the monitoring signal memory had not been reset in the interim, for example, because the substation is difficult to reach in wintertime or reading-out and clearing of the monitoring signal memory via the communication interfaces was not enabled. To defuse this problem it is suggested to set the function parameter to a specific time period so that blocking will only occur if the same fault occurs again within this time period. Otherwise, the P633 will continue to operate normally after a warm restart.

3.15.6 Monitoring Signal Memory Time Tag

The time when the device fault occurred last is recorded.

3.16 Operating Data Recording (Function Group OP_RC)

For the continuous recording of processes in system operation as well as of events, a non-volatile memory is provided (cyclic buffer). The “operationally relevant” signals, each fully tagged with date and time at signal start and signal end, are entered in chronological order. The signals relevant for operation include control actions such as function disabling and enabling and triggers for testing and resetting. The start and end of system loggings and recordings that represent a deviation from normal operation such as overloads, ground faults or short-circuits are also recorded. The overload or fault events itself are stored in the relevant event recordings only. The operating data memory can be cleared/ reset.

Counter for Signals Relevant to System Operation

The signals stored in the operating data memory are counted.

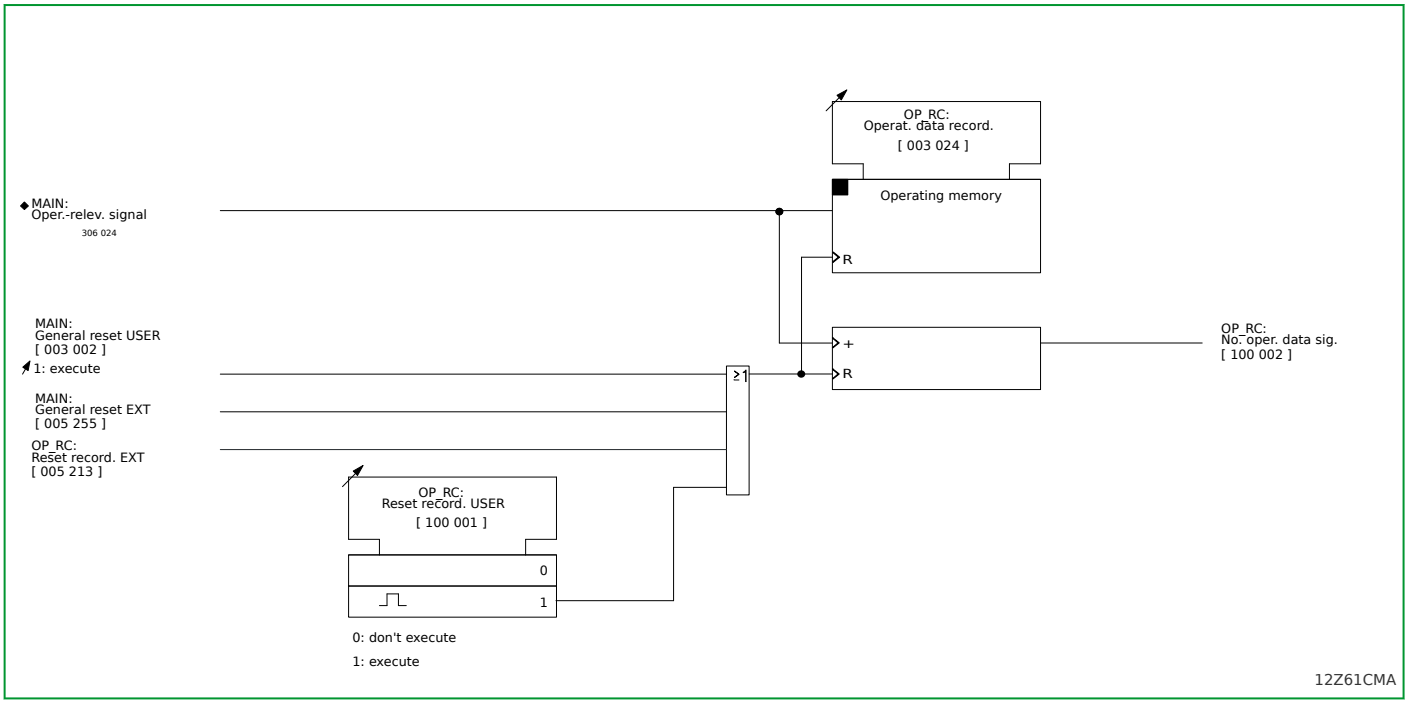

Fig. 3-84: Operating data recording and counter for signals relevant to system operation.

3.17 Monitoring Signal Recording (Function Group MT_RC)

The monitoring signals generated by the self-monitoring function are recorded in the monitoring signal memory. The memory buffer allows for a maximum of 30 entries. If more than 29 monitoring signals occur without interim memory clearance, the SFMON: Overflow MT_RC signal is entered as the last entry. Monitoring signals prompted by a hardware fault in the unit are always entered in the monitoring signal memory. Monitoring signals prompted by a peripheral fault can be entered into the monitoring signal memory, if desired. The user can select this option by setting an “m out of n” parameter (see Section 3.15, (p. 3-119)).

If at least one entry is stored in the monitoring signal memory, this fact is signaled by the red LED indicator H 3 on the local control panel. Each new entry causes the LED to flash (on/off/on....).

The monitoring signal memory can only be cleared manually by a control action. Entries in the monitoring signal memory are not cleared automatically, even if the corresponding test in a new test cycle now shows the P633 to be healthy. The contents of the monitoring signal memory can be read from the local control panel or through the PC or communication interface. The time and date information assigned to the individual entries can be read out through the PC or communication interface or from the local control panel.

Monitoring Signal Counter

The number of entries stored in the monitoring signal memory is displayed on the monitoring signal counter (MT_RC: No. monit. signals).

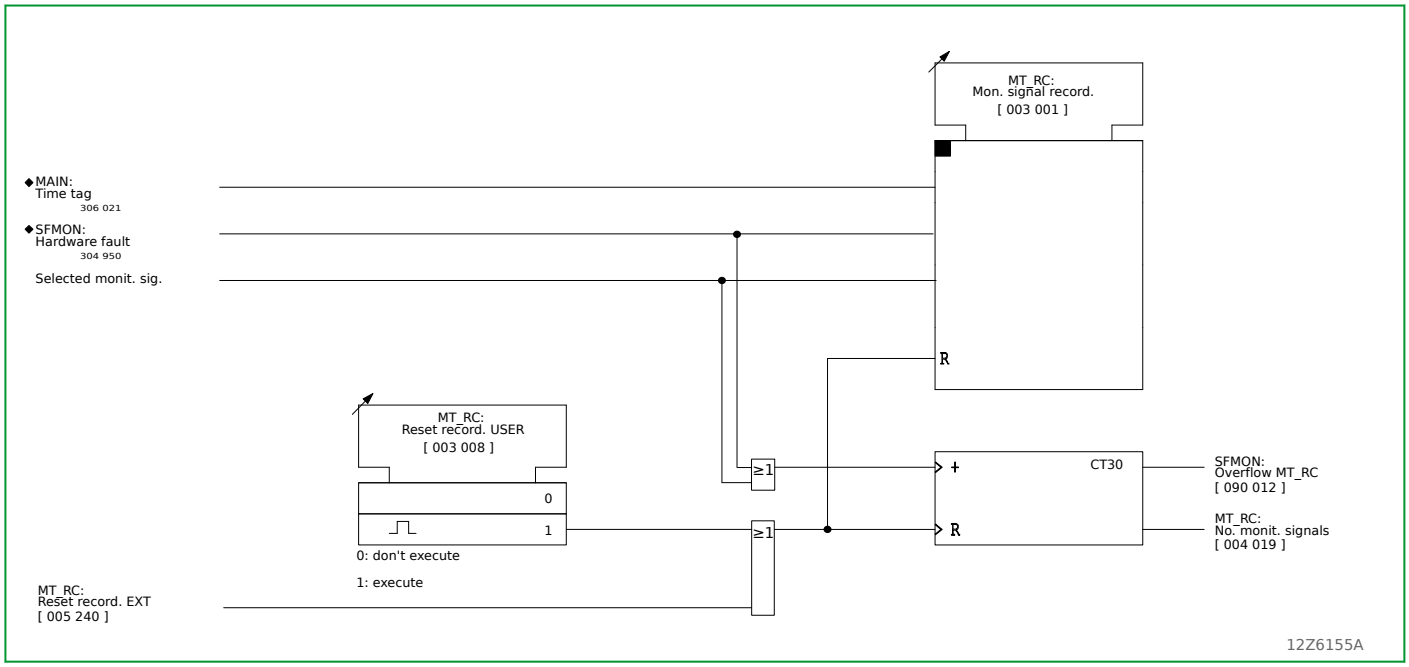

Fig. 3-85: Monitoring signal recording and the monitoring signal counter.

3.18 Overload Data Acquisition (Function Group OL_DA)

In the event of an overload, the P633 determines the following measured overload data.

- Overload duration
- Measured overload data derived from the measured operating data of the thermal overload protection functions THRM1 and THRM2; see also Section 3.26, (p. 3-189).

  The following values are determined for each of the two functions:
  - Status of the thermal replica
  - Load current
  - Object temperature
  - Coolant temperature
  - Time remaining before tripping
  - Offset of the thermal replica

The following description refers to the thermal overload protection 1 (THRM1) function and can be applied similarly to THRM2.

3.18.1 Overload Duration

In the event of an overload, the P633 determines the overload duration. The overload duration is defined as the time between the start and end of the OL_RC: Record. in progress signal.

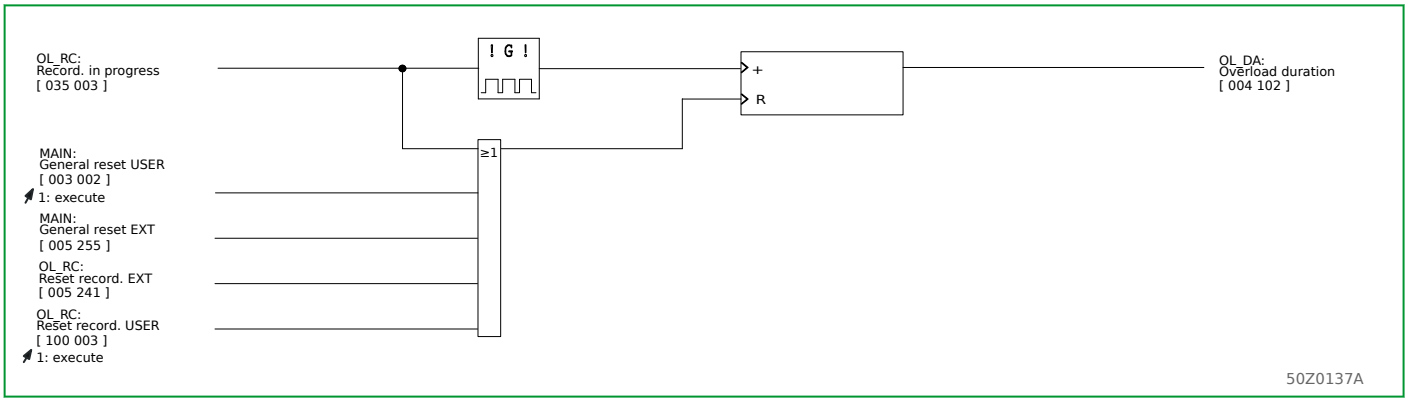

Fig. 3-86: Overload duration.

3.18.2 Acquiring Measured Overload Data from the Thermal Overload Protection

Measured overload values are derived from the thermal overload protection's measured operating data. They are stored at the end of an overload event.

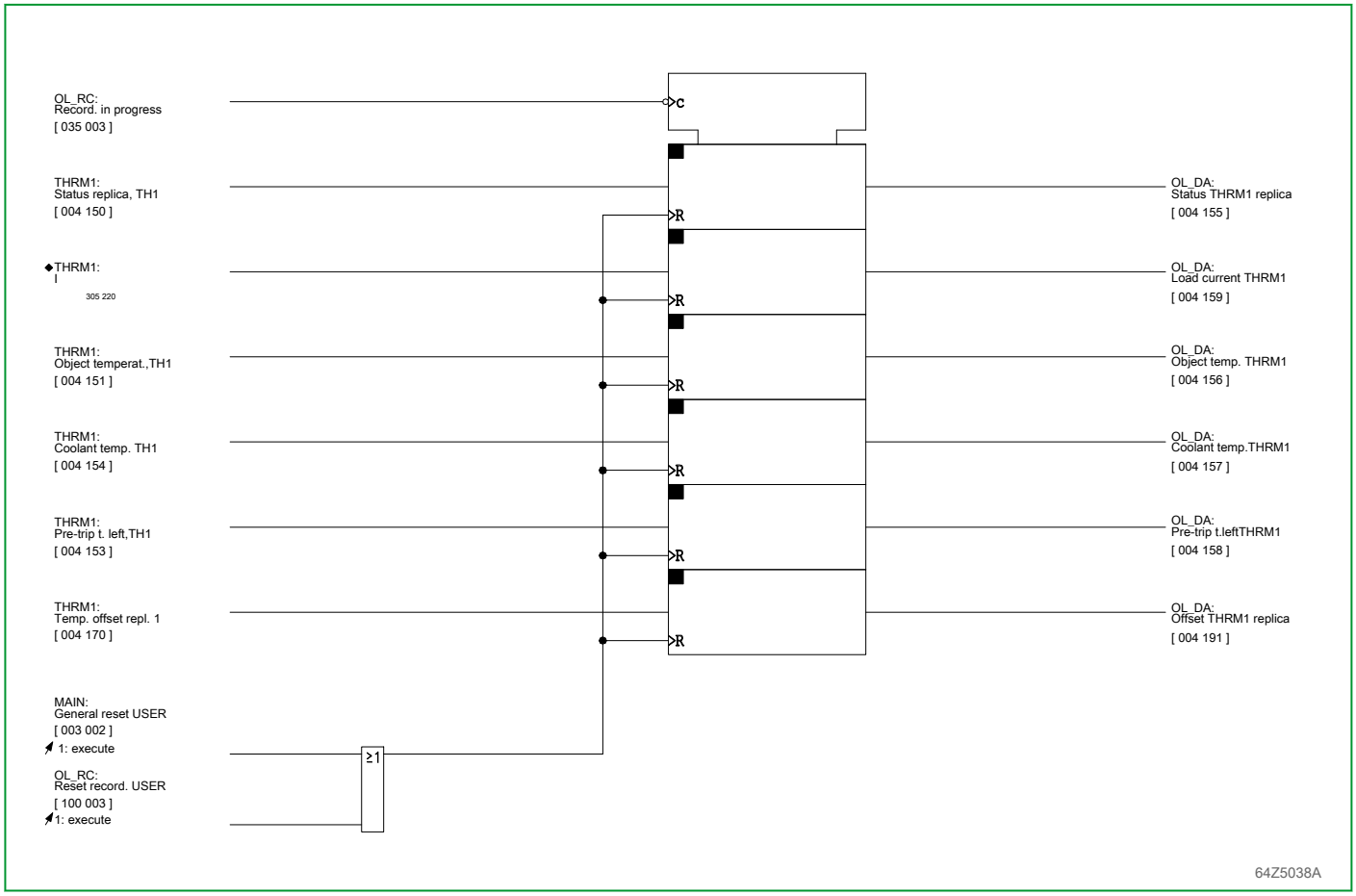

Fig. 3-87: Measured overload values from the thermal overload protection, shown here for THRM1

3.19 Overload Recording (Function Group OL_RC)

3.19.1 Start of Overload Recording

The following description refers to the thermal overload protection 1 (THRM1) function and can be applied similarly to THRM2.

An overload exists – and consequently overload recording begins – if at least the signal `THRM1: Starting k*Iref>` is issued.

3.19.2 Counting Overload Events

Overload events are counted and identified by sequential numbers.

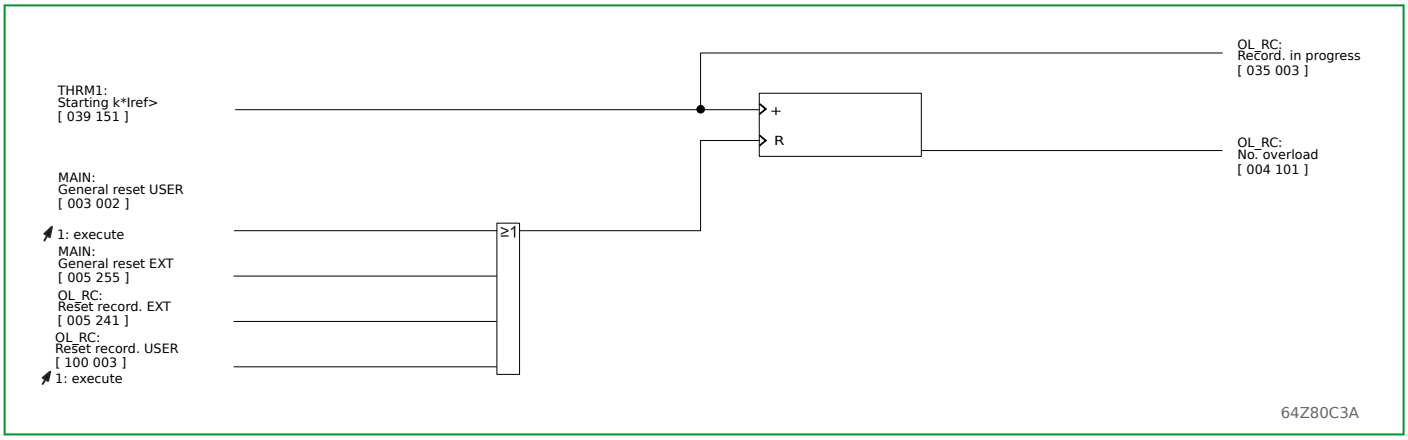

Fig. 3-88: Counting overload events.

3.19.3 Time Tagging

The date of each overload event is stored. The overload start or end signals are likewise time-tagged by the internal clock. The date and time assigned to an overload event when the event begins can be read out from the overload memory on the local control panel or through the PC and communication interfaces. The time information (relative to the onset of the overload) can be retrieved from the overload memory or through the PC or one of the communication interfaces.

3.19.4 Overload Logging

Protection signals during an overload event are logged in chronological order with reference to the specific event. A total of eight overload events, each involving a maximum of 200 start or end signals, can be stored in the non-volatile overload memories. After eight overload events have been logged, the oldest overload log will be overwritten, unless memories have been cleared in the interim. If more than 199 start or end signals have occurred during a single overload event, then OL_RC: Overl. mem. overflow will be entered as the last signal.

In addition to the signals, the measured overload data will also be entered in the overload memory.

The overload logs can be read from the local control panel or through the PC or communication interfaces.

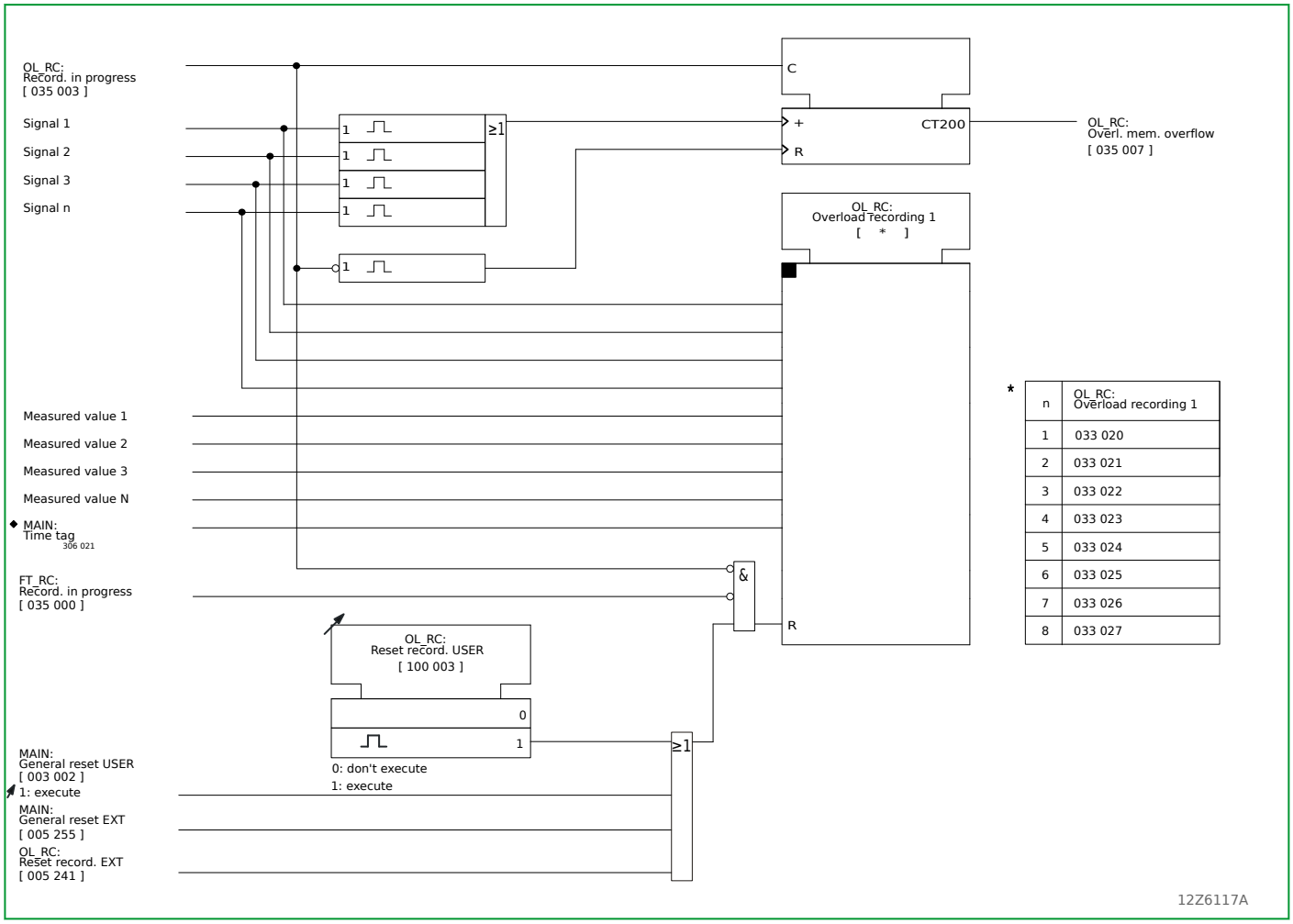

n	OL_RC: Overload recording 1
1	033 020
2	033 021
3	033 022
4	033 023
5	033 024
6	033 025
7	033 026
8	033 027

Fig. 3-89: Overload memory.

3.20 Fault Data Acquisition (Function Group FT_DA)

When there is a primary system fault, the P633 collects the following measured fault data:

Fault duration:

(008 010) FT_DA: Fault duration

Running time:

(004 021) FT_DA: Running time

Type of fault:

(004 198) FT_DA: Fault determ. with

Fault data acquisition time:

(004 199) FT_DA: Run time to meas.

Fault currents:

(010 199) FT_DA: Fault curr. P,A prim
(013 175) FT_DA: Fault curr. P,B prim
(013 177) FT_DA: Fault curr. P,C prim
(010 216) FT_DA: Fault curr. N,A prim
(013 176) FT_DA: Fault curr. N,B prim
(013 178) FT_DA: Fault curr. N,C prim
(025 086) FT_DA: Fault curr.IP,a p.u.
(026 086) FT_DA: Fault curr.IP,b p.u.
(027 086) FT_DA: Fault curr.IP,c p.u.
(025 087) FT_DA: Fault curr.IN,a p.u.
(026 087) FT_DA: Fault curr.IN,b p.u.
(027 087) FT_DA: Fault curr.IN,c p.u.
(025 088) FT_DA: Fault curr.IY,a p.u.
(026 088) FT_DA: Fault curr.IY,b p.u.
(027 088) FT_DA: Fault curr.IY,c p.u.

Differential current of all measuring systems:

(005 082) FT_DA: Diff. current 1
(006 082) FT_DA: Diff. current 2
(007 082) FT_DA: Diff. current 3

Second and fifth harmonic of the differential current:

(005 084) FT_DA: Diff.current 1(2*f0)

(005 085) FT_DA: Diff.current 1(5*f0)

(006 084) FT_DA: Diff.current 2(2*f0)

(006 085) FT_DA: Diff.current 2(5*f0)

(007 084) FT_DA: Diff.current 3(2*f0)

(007 085) FT_DA: Diff.current 3(5*f0)

Restraining current of all measuring systems:

(005 083) FT_DA: Restrain. current 1

(006 083) FT_DA: Restrain. current 2

(007 083) FT_DA: Restrain. current 3

Differential currents of ground differential protection:

(025 082) FT_DA: Diff. current REF_1

(026 082) FT_DA: Diff. current REF_2

(027 082) FT_DA: Diff. current REF_3

Restraining currents of ground differential protection:

(025 083) FT_DA: Restrain.curr. REF_1

(026 083) FT_DA: Restrain.curr. REF_2

(027 083) FT_DA: Restrain.curr. REF_3

3.20.1 Running Time and Fault Duration

The running time is defined as the time between the start and end of the general starting signal, and the fault duration is defined as the time between the start and end of the FT_RC: Record. in progress signal.

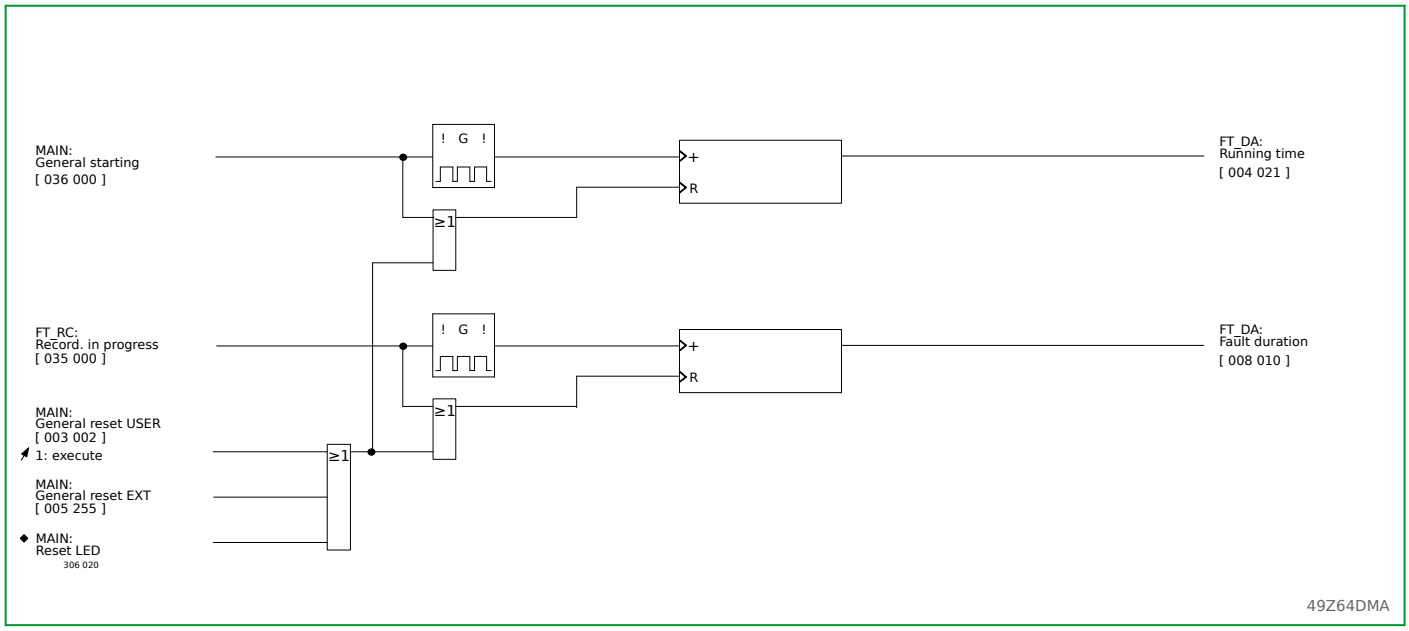

Fig. 3-90: Running time and fault duration.

3.20.2 Fault Data Acquisition Time

The P633 determines the measured fault data for a particular point in time during a fault. Depending on the protection function that recognizes a fault, the criterion for the determination of the recording start time is selected by the P633. If, for example, the differential protection function detects a fault then the P633 determines the measured fault data at the time during the fault when the maximum differential current was measured. The measured fault data are displayed at the end of the fault. If several protection functions detect a fault then the criterion is selected on the basis of the priorities given in the table below. The selected criterion is displayed at the P633.

Priority	Function Recognizing the Fault	Acquisition Time Criterion
1	Differential protection function	Maximum differential current
2	Ground differential protection, end a (Br: Restricted earth fault protection, end a)	Maximum differential current (REF_1)
3	Ground differential protection, end b (Br: Restricted earth fault protection, end b)	Maximum differential current (REF_2)
4	Ground differential protection, end c (Br: Restricted earth fault protection, end c)	Maximum differential current (REF_3)
5	Definite-time overcurrent protection or inverse-time overcurrent protection	Maximum restraining current
6	Functions according to the selection through m out of n parameters	End of fault

The difference in time between the start of the fault and the fault data acquisition time is determined by the P633 and displayed.

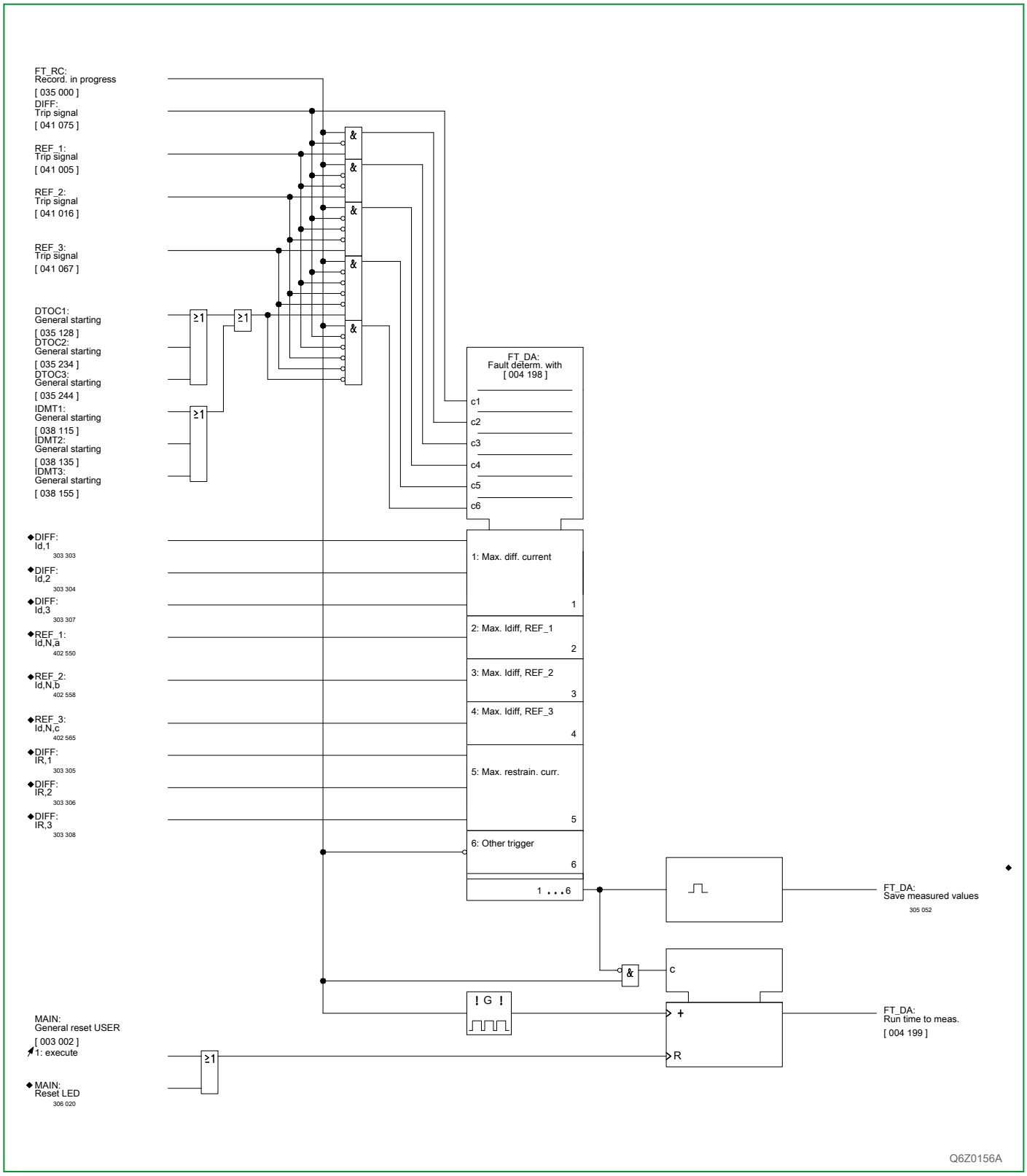

Fig. 3-91: Determination of the fault data acquisition time

3.20.3 Acquisition of the Fault Currents

The P633 stores the fault currents data determined at the acquisition time. The following fault currents are stored:

- The maximum phase currents for each end of the transformer
- The residual current calculated from the phase currents
- The current measured by the P633 at transformer -Tx4 (x: 1, 2 or 3)

The fault currents are displayed as per-unit quantities referred to I_{nom}. xy

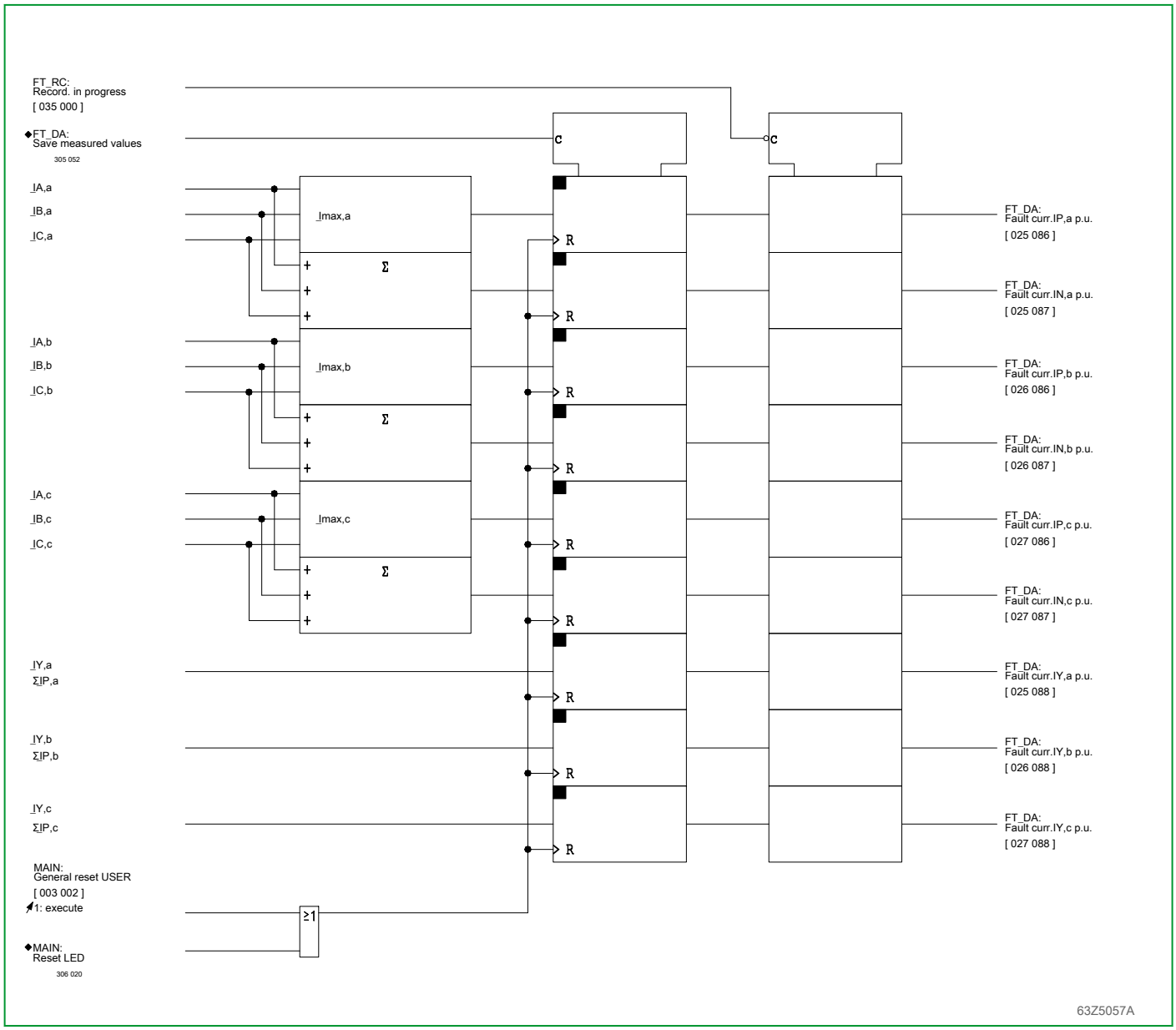

Fig. 3-92: Acquisition of the fault currents

3.20.4 Acquisition of the Differential and Restraining Currents

The P633 stores the differential and restraining current data determined at the acquisition time by the differential protection and ground differential protection functions. Moreover, the values for the second and fifth harmonics of the differential current are stored.

Differential and restraining currents are stored as per-unit quantities referred to I_{ref}.

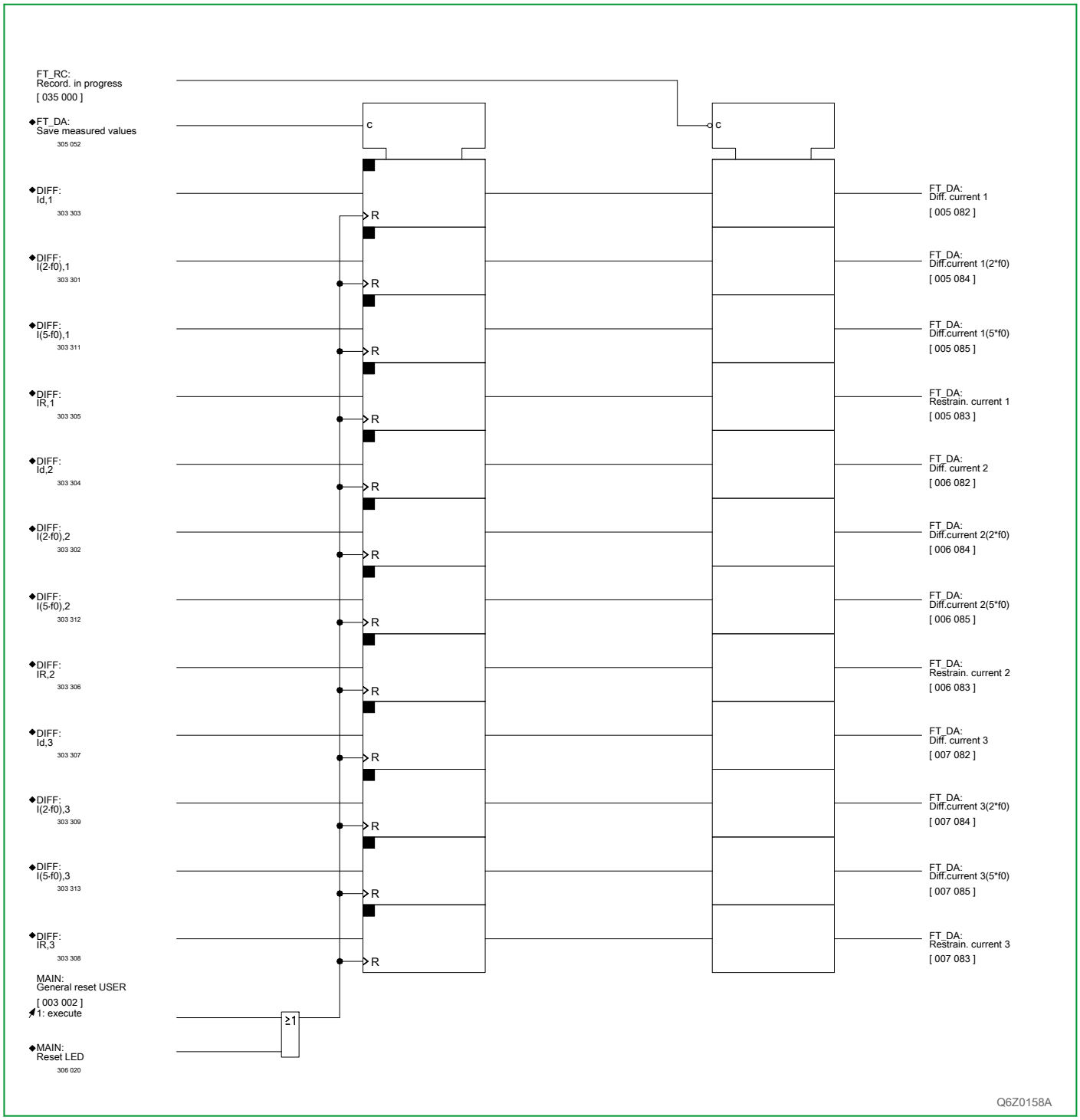

Fig. 3-93: Acquisition of the differential and restraining currents of differential protection

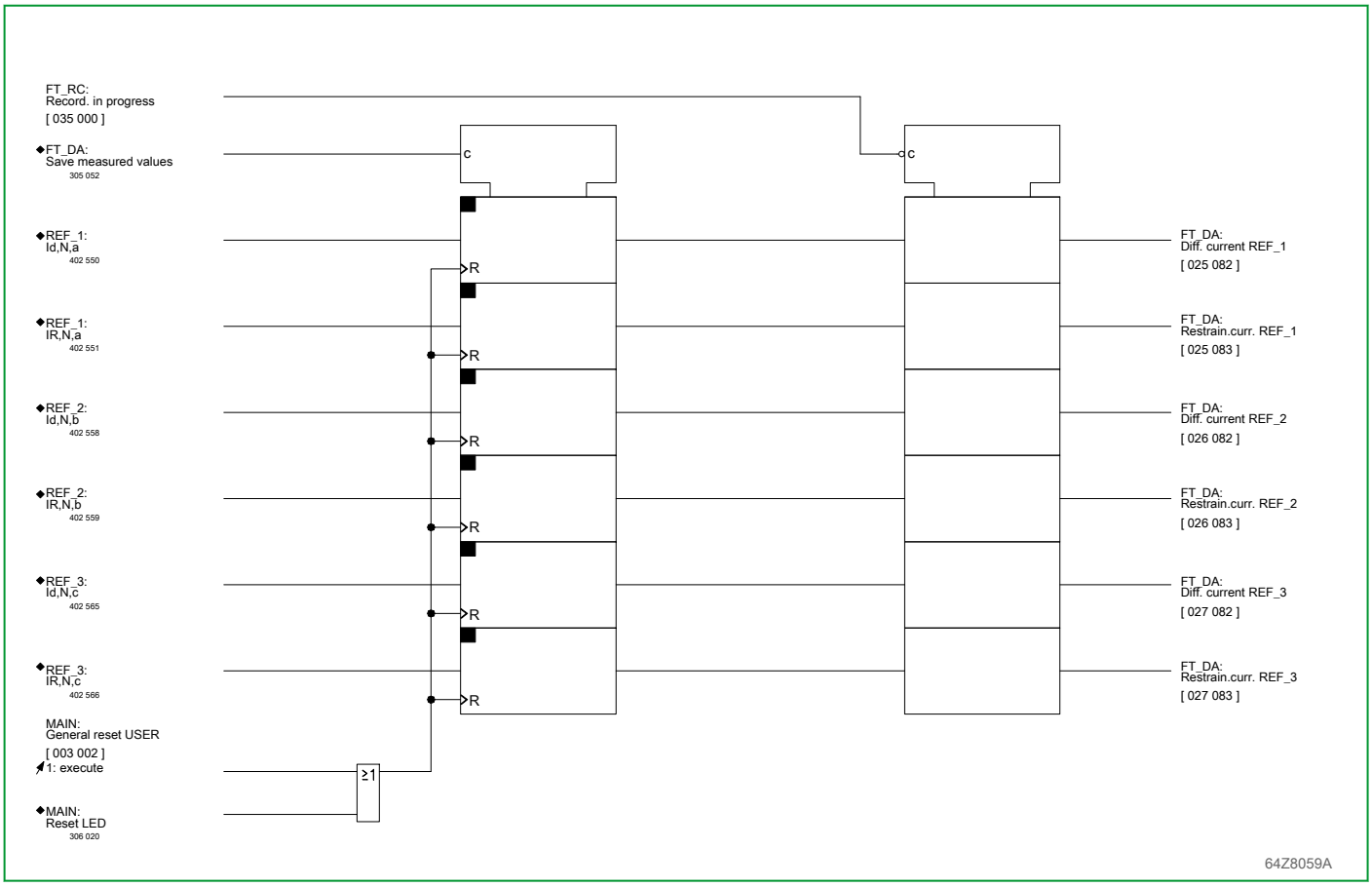

Fig. 3-94: Acquisition of the differential and restraining currents of ground differential protection

3.20.5 Fault Data Reset

After pressing the clear key ⓒ on the local control panel, the fault data value is displayed as *Not measured*. However, the values are not erased and can still be read out through the PC and communication interfaces.

3.21 Fault Recording (Function Group FT_RC)

3.21.1 Start of Fault Recording

A fault exists and fault recording begins if at least one of the following signals is present:

- FT_RC: Trigger
- FT_RC: Id> triggered
- FT_RC: IR> triggered

In addition fault recording may also be started manually using setting parameters or externally through an appropriately configured binary signal input.

3.21.2 Fault Counting

Faults are counted and identified by sequential numbers.

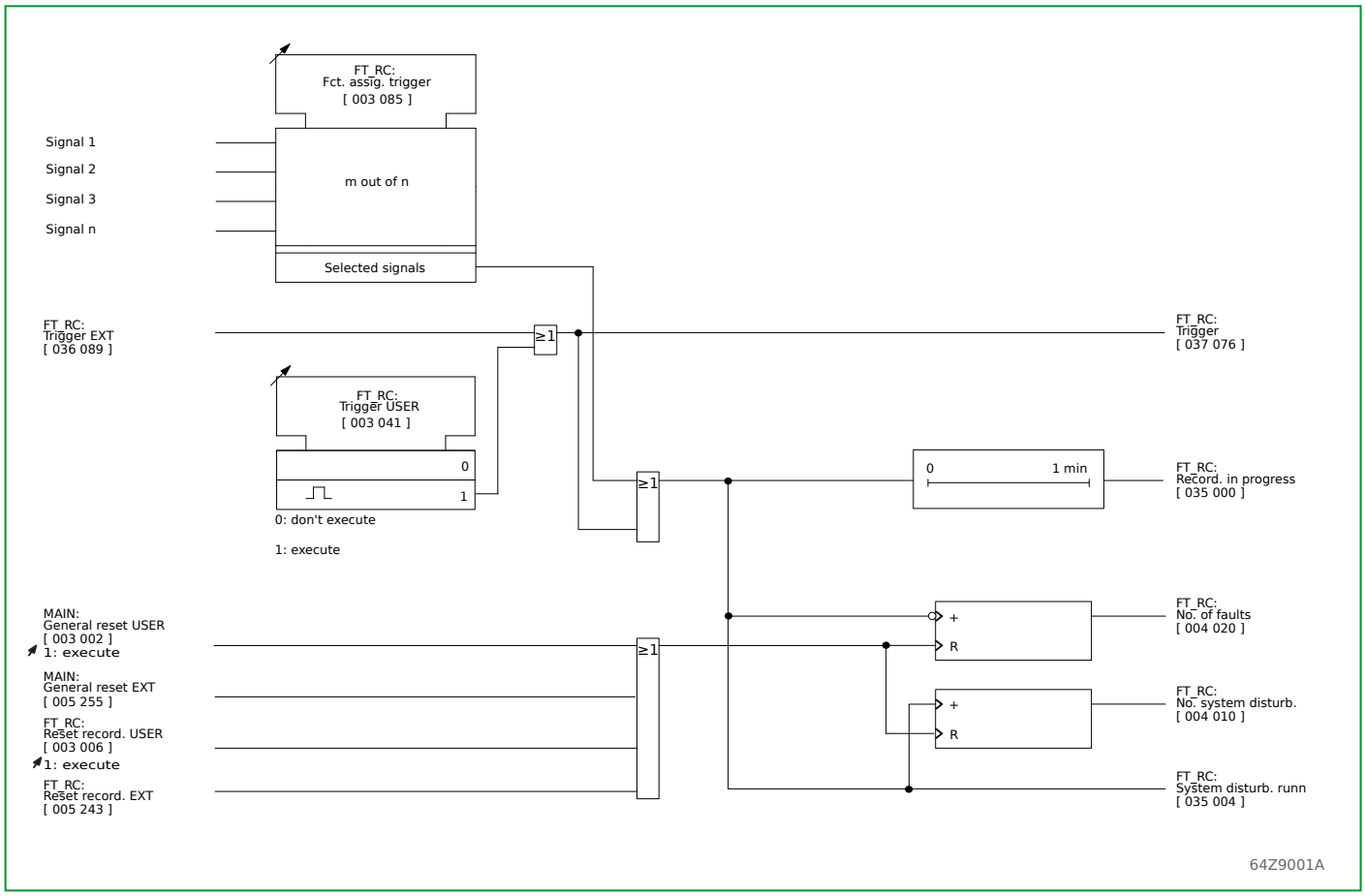

Fig. 3-95: Start of fault recording and fault counter.

3.21.3 Time Tagging

The date that is assigned to each fault by the internal clock is stored. A fault's individual start or end signals are likewise time-tagged. The date and time assigned to a fault when the fault begins can be read out from the fault memory on the local control panel or through the PC and communication interfaces. The time information (relative to the onset of the fault) that is assigned to the signals can be retrieved from the fault memory or through the PC or communication interfaces.

3.21.4 Fault Recordings

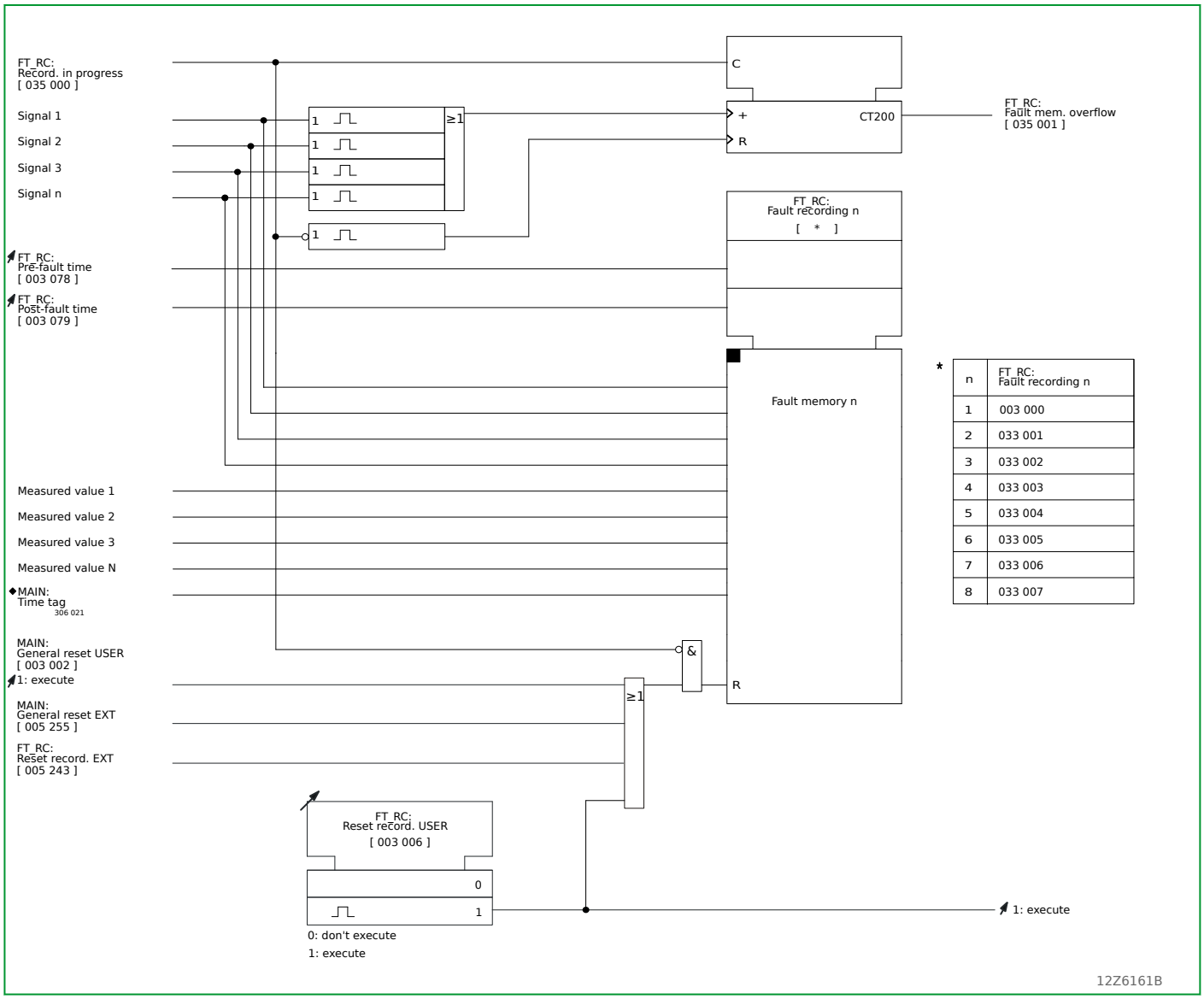

n	FT_RC: Fault recording n
1	003 000
2	033 001
3	033 002
4	033 003
5	033 004
6	033 005
7	033 006
8	033 007

Fig. 3-96: Fault memory.

Protection signals, including the signals during the settable pre-fault and post-fault times, are logged in chronological order with reference to the specific fault. A total of eight faults, each involving a maximum of 200 start or end signals, can be stored in the non-volatile fault memories. After eight faults have been recorded, the oldest fault recording will be overwritten, unless memories have been cleared in the interim. If more than 199 start or end signals have occurred during a single fault, then FT_RC: Fault mem. overflow will be entered as the last signal. If the time and date are changed during the pre-fault time, the signal FT_RC: Faulty time tag is generated.

In addition to the fault signals, the measured fault data will also be entered in the fault memory.

The fault recordings can be read from the local control panel or through the PC or communication interfaces.

3.21.5 Fault Value Recording

The following analog signals are recorded:

- Phase currents of all 3 ends of the transformer
- Residual current measured by the P633 at the -Tx4 (x: 1, 2 or 3) transformer
- Voltage

The signals are recorded before, during and after a fault. The window length for oscillography recording before and after the fault can be set. A maximum time period of 16.4 s (for 50 Hz) or 13.7 s (for 60 Hz) is available for recording. This period can be divided among a maximum of eight faults. The maximum recording time per fault can be set. If a fault, including the set pre-fault and post-fault times, lasts longer than the set maximum recording time, then recording will terminate when the set maximum recording time is reached.

The pre-fault time is exactly adhered to if it is shorter than the set maximum recording time. Otherwise the pre-fault time is set to the maximum recording time minus a sampling increment, and the post-fault time is set to zero.

If the maximum recording time is exceeded, the analog values for the oldest fault are overwritten, but not the binary values. If more than eight faults have occurred since the last reset, then all data for the oldest fault are overwritten.

The analog oscillography data of the fault record can only be read out through the PC or communication interfaces.

When the supply voltage is interrupted or after a warm restart, the values of all faults remain stored.

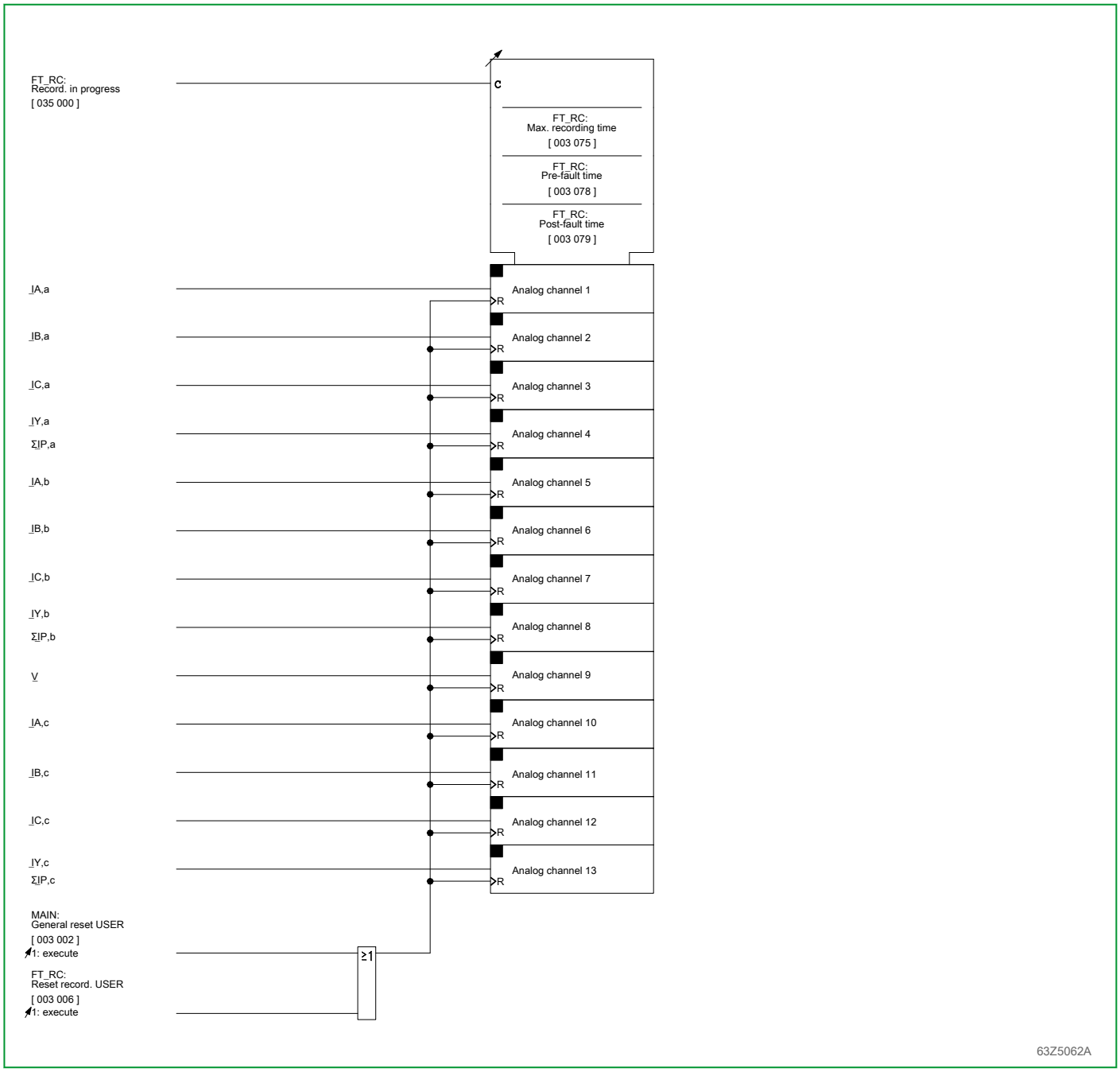

Fig. 3-97: Fault value recording

3.22 Differential Protection (Function Group DIFF)

The P633 is designed for the protection of transformers as well as for the protection of motors and generators and of other two-winding or three-winding arrangements.

For the application of the device as transformer differential protection, amplitude matching is required. This is achieved simply by setting of the reference power - generally the nominal power of the transformer - and of the primary nominal voltages for all windings of the transformer.

Vector group matching is achieved by the straightforward input of the relevant vector group identification number. For special applications, zero-sequence current filtering may be deactivated. For conditions where it is possible to load the transformer with a voltage in excess of the nominal voltage, the overfluxing restraint prevents inappropriate tripping.

For the application as differential protection device for motors or generators, the harmonic restraint (inrush compensation) can be deactivated. The start-up of directly switched asynchronous motors represents a problem in differential protection due to transient transformer saturation caused by a displacement of the start-up current for relatively high primary time constants. Even under these unfavorable measurement conditions, the P633 exhibits an excellent stable performance due to the application of a saturation discriminator.

All observations below are based on the assumption that the system current transformers are connected to the P633 in standard configuration (see Section 3.13.1, (p. 3-80)). In particular, the application as transformer differential protection device presupposes that winding ‘a’ corresponds to the high voltage side of the transformer. For a non-standard connection, the appropriate settings must be selected (see Chapter 7, (p. 7-1)).

3.22.1 Enabling or Disabling Differential Protection

Differential protection can be enabled or disabled from the local control panel. Moreover, enabling can be done separately for each parameter subset.

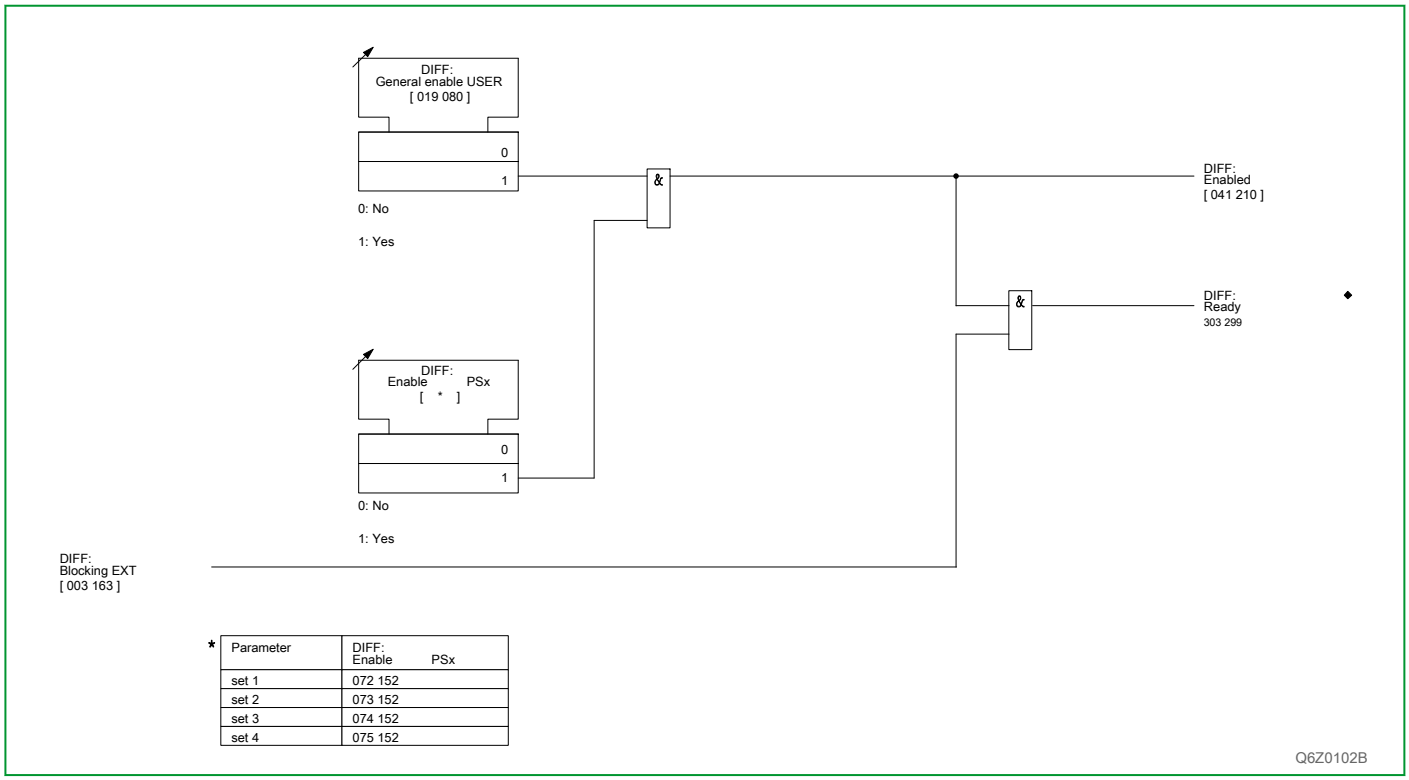

* Parameter	DIFF: Enable PSx
set 1	072 152
set 2	073 152
set 3	074 152
set 4	075 152

Fig. 3-98: Enabling or disabling differential protection

3.22.2 Amplitude Matching

In order to set the amplitude matching for the protected object, a reference power - identical for all windings - needs to be defined. For two-winding arrangements, the nominal power will usually be the reference power. For three-winding transformers, the nominal power of the highest-power winding should be set as the reference power. The individual reference currents for each winding of the protected object are then calculated by the P633 on the basis of the set reference power and the set primary nominal voltages of the transformer.

$$I_{ref,a} = \frac{S_{ref}}{\sqrt{3} \cdot V_{nom,a}}$$

$$I_{ref,b} = \frac{S_{ref}}{\sqrt{3} \cdot V_{nom,b}}$$

$$I_{ref,c} = \frac{S_{ref}}{\sqrt{3} \cdot V_{nom,c}}$$

S_{ref}: reference power

$I_{ref,a...c}$: reference current of winding a, b or c

$V_{nom,a...c}$: nominal voltage of winding a, b or c

The P633 calculates the matching factors on the basis of the reference currents and the set primary nominal currents of the system transformers.

$$k_{am,a} = \frac{I_{nom,a}}{I_{ref,a}}$$

$$k_{am,b} = \frac{I_{nom,b}}{I_{ref,b}}$$

$$k_{am,c} = \frac{I_{nom,c}}{I_{ref,c}}$$

with

$k_{am,a...c}$: amplitude matching factor of end a, b or c

$I_{nom,a...c}$: primary nominal currents of the system transformers

Reference currents and matching factors are displayed at the P633.

The P633 checks that the reference currents and matching factors are within their permissible ranges. The matching factors must satisfy the following conditions:

- The matching factors must always be ≤ 16.
- The value for the second highest matching factor ($k_{am,mid}$) must always be ≥ 0.5.

In three-end protection, the “weakest“ end, that is the end with the smallest primary nominal transformer current, is thus not under any restrictions pertaining to the settings for the amplitude matching.

Should the P633 calculate reference currents or matching factors not satisfying the above conditions then an alarm will be issued and the P633 will be blocked automatically.

The measured values of the phase currents of the windings of the protected object are multiplied by the relevant matching factors and are then available for further processing. Consequently, all threshold values and measured values always refer back to the relevant reference currents rather than to the transformer nominal currents or the nominal currents of the device.

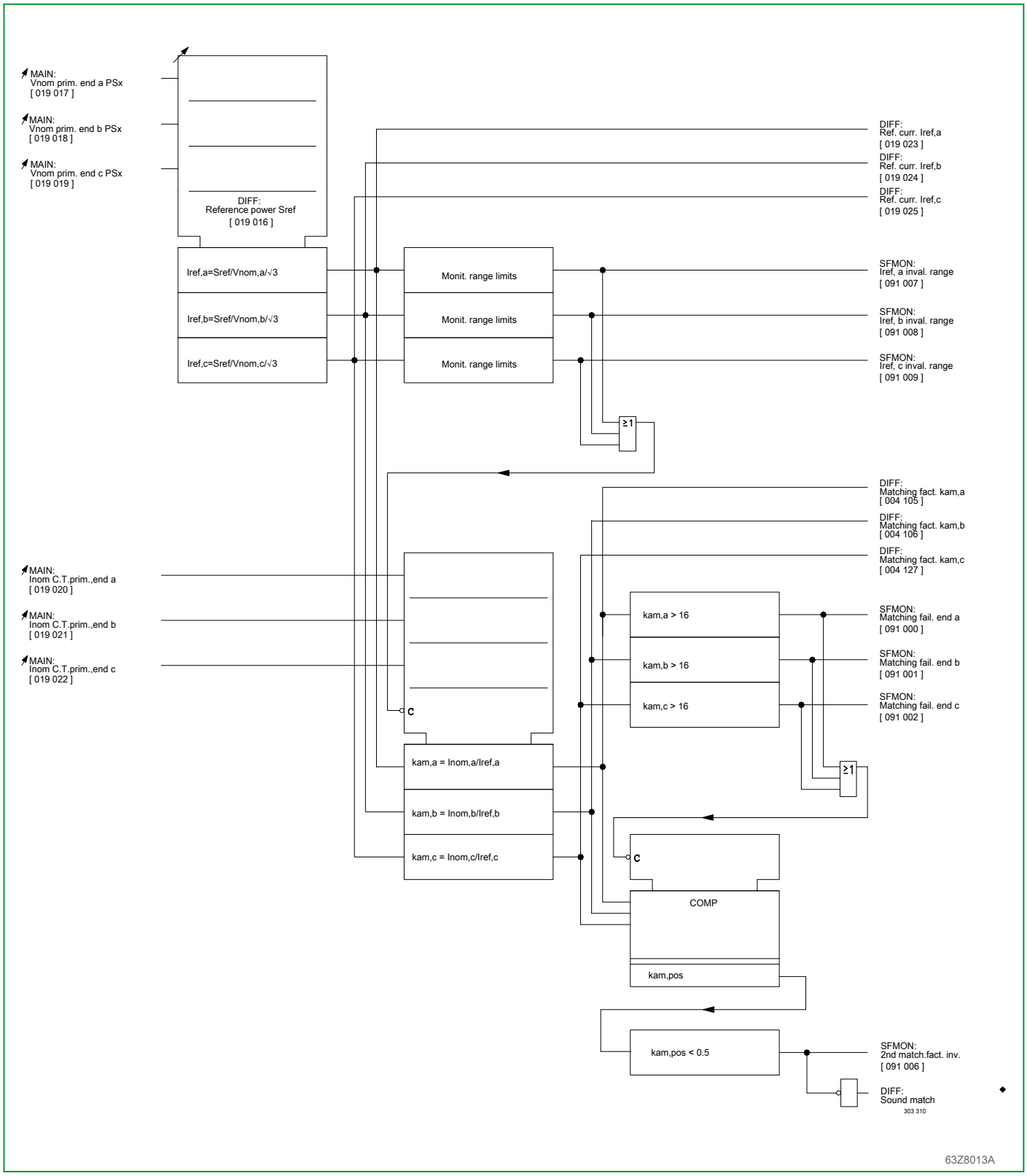

Fig. 3-99: Calculating and checking the matching factors

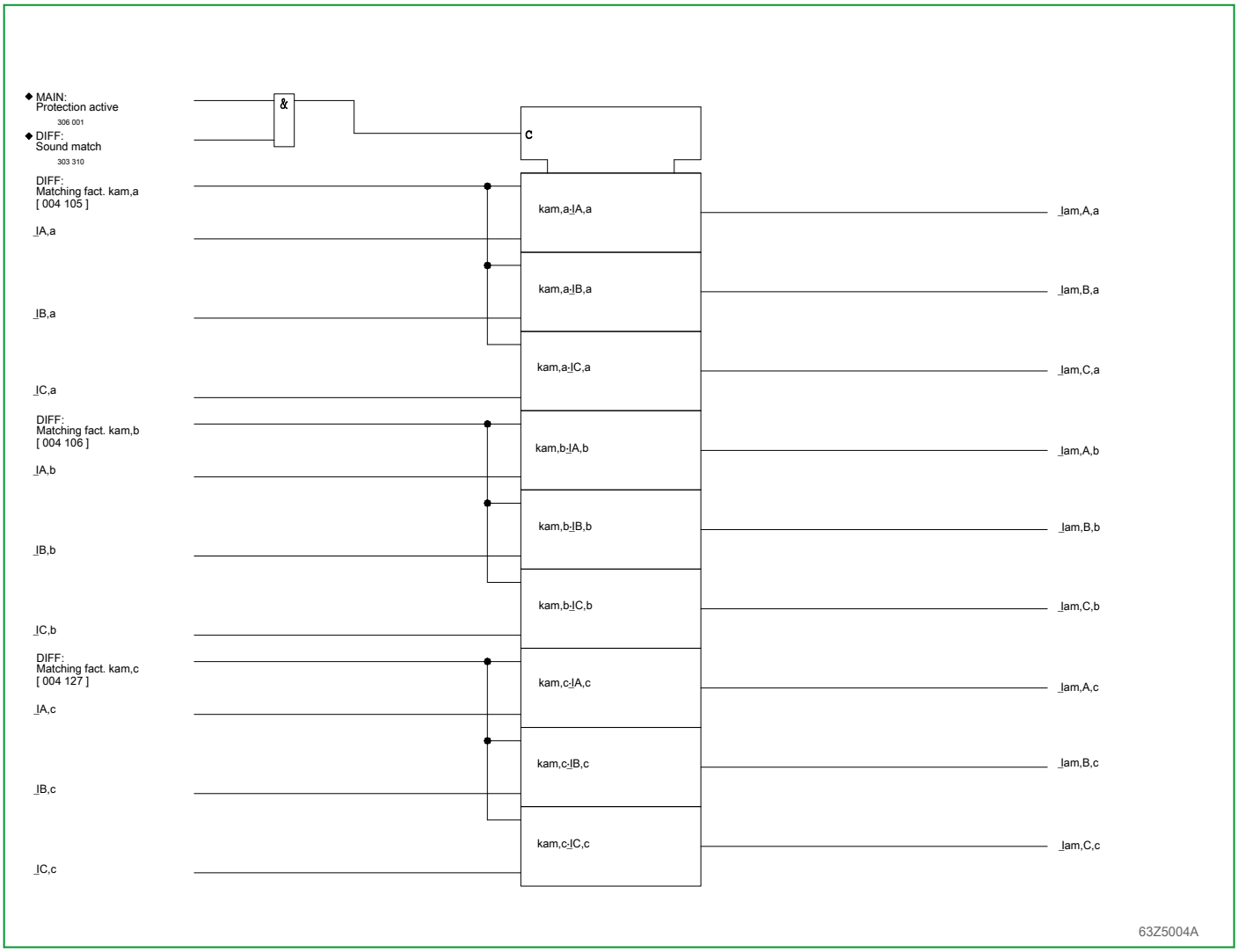

Fig. 3-100: Amplitude matching

3.22.3 Vector Group Matching

Vector group matching means that the low voltage-side currents are rotated with respect to the high voltage-side currents according to the vector group of the transformer to be protected. Thereby, phase coincidence with the high voltage-side currents is restored. With the P633, this is achieved by calculating the relevant vector difference or where appropriate, by sign inversion for the low voltage-side phase currents (end b or c). Care must be taken to avoid distortion of the amplitude matching by this operation. For all odd vector groups, this is achieved by means of the factor 1/√3. Using vector diagrams, it can be shown that the operations listed in the following table will lead to phase coincidence of the high and low voltage-side currents while maintaining the amplitude matching. In Fig. 3-101, (p. 3-145), such a vector diagram is depicted for a transformer having the vector group Yd5 as an example. By subtraction of each phase current from the cyclically leading phase current and subsequent multiplication by the factor 1/√3, the desired matching is achieved.

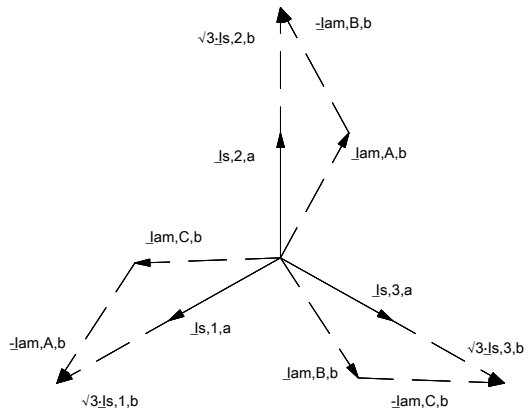

Fig. 3-101: Vector diagram for vector group matching with a transformer having the vector group Yd5

3.22.4 Zero-sequence Current Filtering

Table 3-9, (p. 3-146) shows that the zero-sequence current is subtracted from the phase currents of winding a and, for all even vector groups, from the phase currents of windings b and c. According to the theory of symmetric components, the zero-sequence current is calculated as follows:

$$\underline{I}_{am,0,z} = \frac{1}{3} \cdot [\underline{I}_{am,A,z} + \underline{I}_{am,B,z} + \underline{I}_{am,C,z}]$$

z: end a, b or c

$\underline{I}_{am}$: amplitude-matched current

Zero-sequence filtering may be disabled separately for each end.

In general this disabling of zero-sequence filtering is intended for even-numbered vector groups. Should the side considered here require the setting of an odd-numbered vector group while at the same time no operational system star point grounding is provided within the protected area, then, in view of increased sensitivity with single-pole internal faults, it is recommended that the respective zero-sequence current is fed to the individual measuring systems again.

Zero-sequence filtering for the transformer ends a, b or c is enabled using the setting parameters:

- DIFF: 0-seq. filt.a en.PSx
- DIFF: 0-seq. filt.b en.PSx
- DIFF: 0-seq. filt.c en.PSx

Table 3-9, (p. 3-146) lists the required operations for all vector groups that may occur. The indices in the equations have the following meanings:

am: amplitude-matched

s: amplitude- and vector group-matched

x: phase A, B or C

y: measuring system 1, 2 or 3

z: end a, b or c

x+1: cyclically trailing phase

x-1: cyclically leading phase

End	ID of the vector group	Setting: With zero-sequence filtering	Setting: Without zero-sequence filtering
		$\underline{I}_{s,y,z} =$	$\underline{I}_{s,y,z} =$
a		$\underline{I}_{am,x,a} - \underline{I}_{am,0,a}$	$\underline{I}_{am,x,a}$
b or c	0=12	$\underline{I}_{am,x,z} - \underline{I}_{am,0,z}$	$\underline{I}_{am,x,z}$
	1	$[\underline{I}_{am,x,z} - \underline{I}_{am,x+1,z}] \cdot \frac{1}{\sqrt{3}}$	$[\underline{I}_{am,x,z} - \underline{I}_{am,x+1,z}] \cdot \frac{1}{\sqrt{3}} + \underline{I}_{am,0,z}$
	2	$\underline{I}_{am,0,z} - \underline{I}_{am,x+1,z}$	$\underline{I}_{am,x+1,z}$
	3	$[\underline{I}_{am,x-1,z} - \underline{I}_{am,x+1,z}] \cdot \frac{1}{\sqrt{3}}$	$[\underline{I}_{am,x-1,z} - \underline{I}_{am,x+1,z}] \cdot \frac{1}{\sqrt{3}} + \underline{I}_{am,0,z}$
	4	$\underline{I}_{am,x-1,z} - \underline{I}_{am,0,z}$	$\underline{I}_{am,x-1,z}$
	5	$[\underline{I}_{am,x-1,z} - \underline{I}_{am,x,z}] \cdot \frac{1}{\sqrt{3}}$	$[\underline{I}_{am,x-1,z} - \underline{I}_{am,x,z}] \cdot \frac{1}{\sqrt{3}} + \underline{I}_{am,0,z}$
	6	$\underline{I}_{am,0,z} - \underline{I}_{am,x,z}$	$\underline{I}_{am,x,z}$
	7	$[\underline{I}_{am,x+1,z} - \underline{I}_{am,x,z}] \cdot \frac{1}{\sqrt{3}}$	$[\underline{I}_{am,x+1,z} - \underline{I}_{am,x,z}] \cdot \frac{1}{\sqrt{3}} + \underline{I}_{am,0,z}$
	8	$\underline{I}_{am,x+1,z} - \underline{I}_{am,0,z}$	$\underline{I}_{am,x+1,z}$
	9	$[\underline{I}_{am,x+1,z} - \underline{I}_{am,x-1,z}] \cdot \frac{1}{\sqrt{3}}$	$[\underline{I}_{am,x+1,z} - \underline{I}_{am,x-1,z}] \cdot \frac{1}{\sqrt{3}} + \underline{I}_{am,0,z}$
	10	$\underline{I}_{am,0,z} - \underline{I}_{am,x-1,z}$	$\underline{I}_{am,x-1,z}$
	11	$[\underline{I}_{am,x,z} - \underline{I}_{am,x-1,z}] \cdot \frac{1}{\sqrt{3}}$	$[\underline{I}_{am,x,z} - \underline{I}_{am,x-1,z}] \cdot \frac{1}{\sqrt{3}} + \underline{I}_{am,0,z}$

Tab. 3-9: Required operations for vector groups with or without zero-sequence current filtering

Vector group matching is via a straight-forward input of the vector group identification number provided that the phase currents of the high and low voltage side(s) are connected in standard configuration (see section Section 3.13.1, (p. 3-80)). For other configurations, special considerations apply (see Chapter 7, (p. 7-1)). A reverse phase rotation (A-C-B) needs to be taken into account by making the appropriate setting at the P633. The P633 will then automatically form the complementary value of the set vector group ID to the number 12 (vector group ID = 12 – set ID).

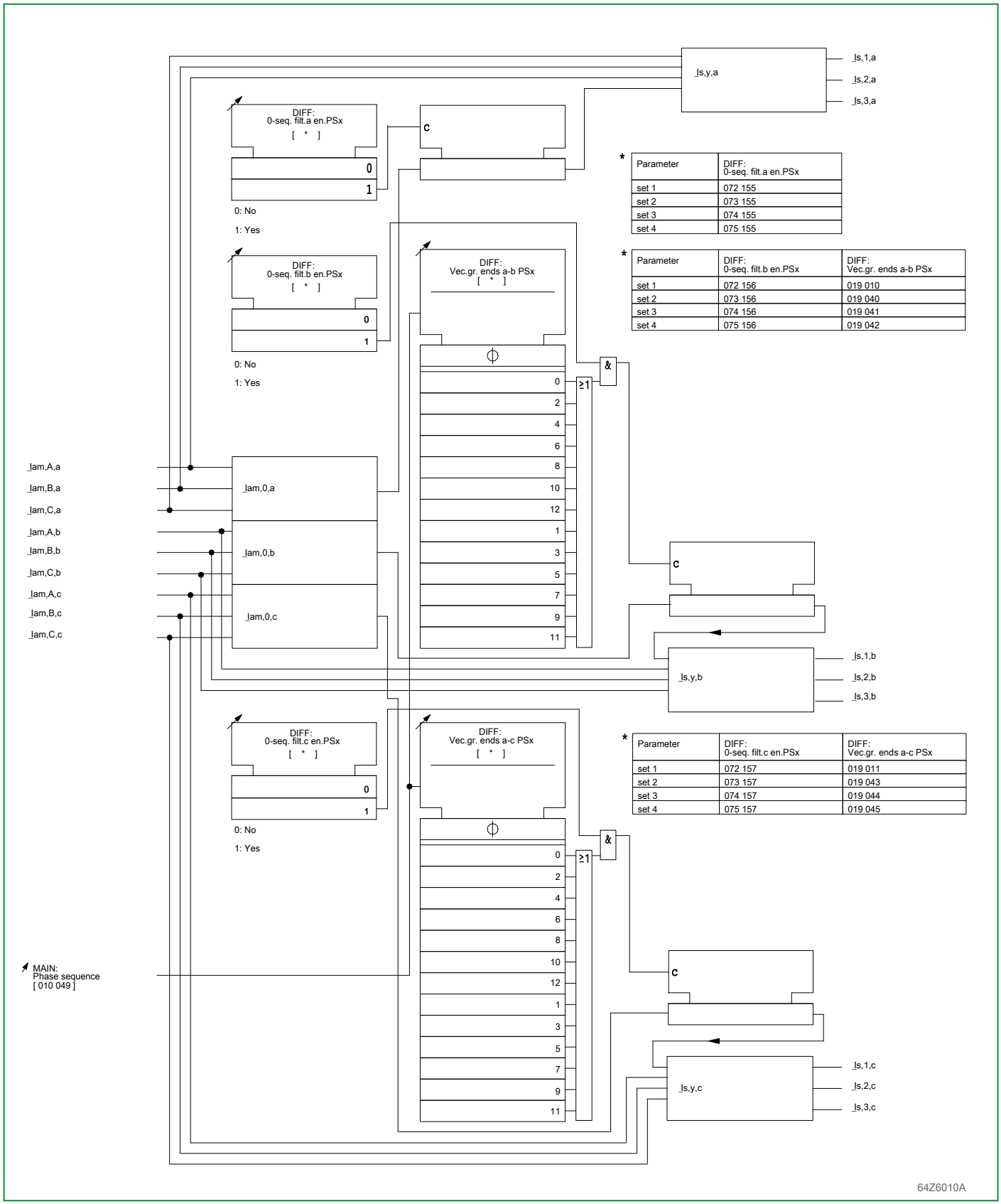

* Parameter	DIFF: 0-seq. filt.a en.PSx
set 1	072 155
set 2	073 155
set 3	074 155
set 4	075 155

* Parameter	DIFF: 0-seq. filt.b en.PSx	DIFF: Vec.gr. ends a-b PSx
set 1	072 156	019 010
set 2	073 156	019 040
set 3	074 156	019 041
set 4	075 156	019 042

* Parameter	DIFF: 0-seq. filt.c en.PSx	DIFF: Vec.gr. ends a-c PSx
set 1	072 157	019 011
set 2	073 157	019 043
set 3	074 157	019 044
set 4	075 157	019 045

Fig. 3-102: Vector group matching and zero-sequence filtering

3.22.5 Tripping Characteristics

The differential and restraining current values for each measurement system are calculated from the current values after amplitude and vector group matching.

The following equations are valid for uniformly defined current arrows relative to the protected equipment, e.g. all the current arrows of all windings point either towards the protected object or away from it.

Calculation of differential and restraining currents:

$$I_{d,y} = \left| I_{s,y,a} + I_{s,y,b} + I_{s,y,c} \right|$$

$$I_{R,y} = 0.5 \cdot \left| \left| I_{s,y,a} \right| + \left| I_{s,y,b} \right| + \left| I_{s,y,c} \right| \right|$$

The tripping characteristic of the P633 line differential protection device has two knee points. The first knee-point depends on the setting at DIFF: Idiff> PSx and is on the intersection with the tripping characteristic for single-side feed.

If the current transformer supervision (CTS) function is used, the basic pick-up sensitivity DIFF: Idiff> PSx can be increased to a set value (DIFF: Idiff>(CTS) PSx) when a CT fault is detected. See details given in the section describing the CTS function group.

The second knee of the tripping characteristic is defined by the setting at DIFF: Idiff> PSx.

The characteristic equations for the three different ranges are given below. Fig. 3-103, (p. 3-150) shows the tripping characteristic.

Characteristics equation for the range $0 \le I_R \le 0.5 I_{diff>}$:

$$\frac{I_d}{I_{ref}} = \frac{I_{diff>}}{I_{ref}}$$

Characteristics equation for the range $0.5 I_{diff>} < I_R \le I_{R,m_2}$:

$$\frac{I_d}{I_{ref}} = m_1 \cdot \frac{I_R}{I_{ref}} + \frac{I_{diff>}}{I_{ref}} \cdot (1 - 0.5 \cdot m_1)$$

Characteristics equation for the range $I_{R,m_2} < I_R$:

$$\frac{I_d}{I_{ref}} = m_2 \cdot \frac{I_R}{I_{ref}} + \frac{I_{diff>}}{I_{ref}} \cdot (1 - 0.5 \cdot m_1) + \frac{I_{R,m_2}}{I_{ref}} \cdot (m_1 - m_2)$$

I_{ref}: reference current

m_1: gradient of the characteristic in range $0.5 I_{diff>} < I_R \le I_{R,m_2}$

m_2: gradient of characteristic in range $I_{R,m_2} < I_R$

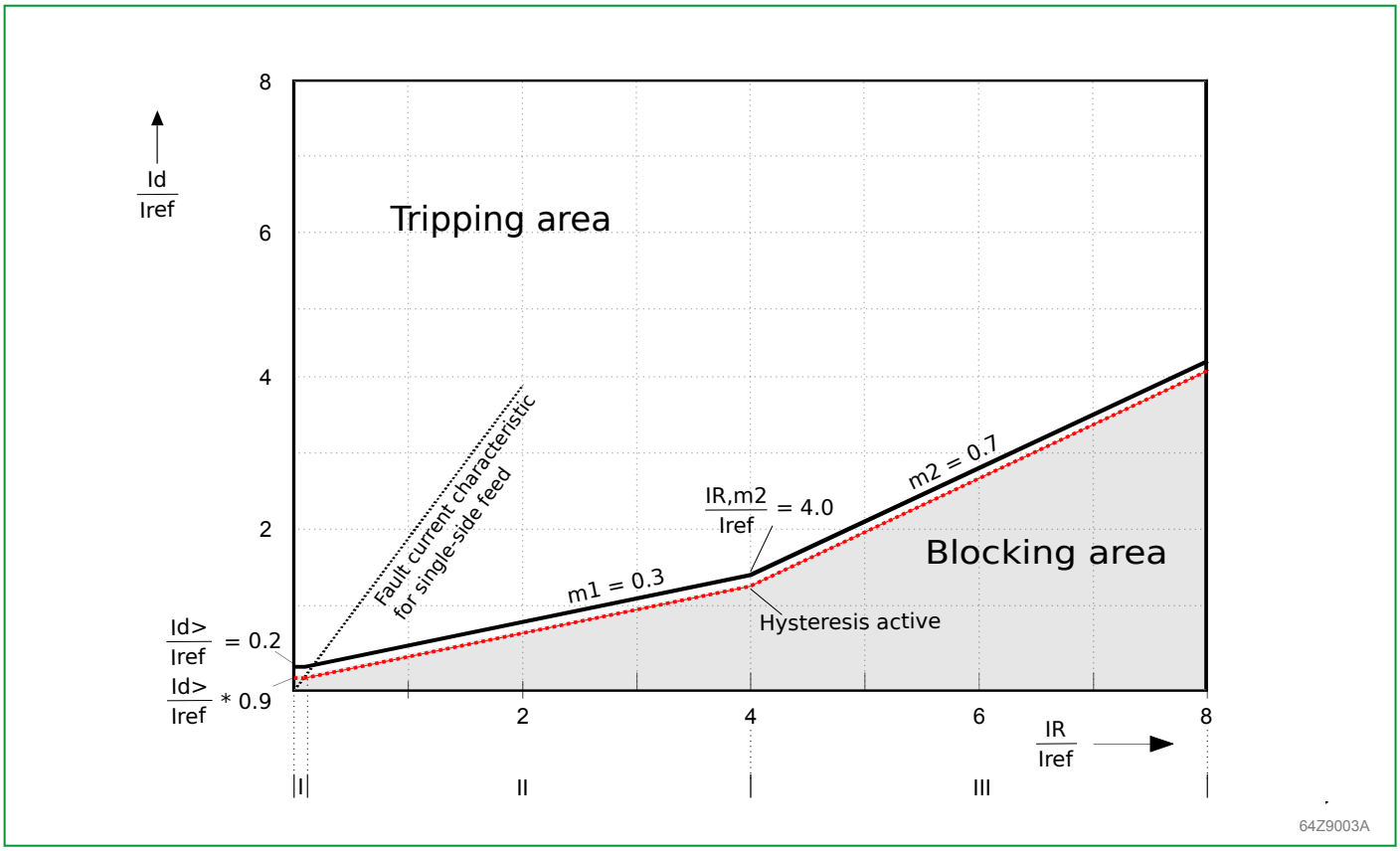

Fig. 3-103: Tripping characteristic of differential protection

Differential protection can optionally be set to trip with a definite time delay (setting 010 162 DIFF: Op.del.,trip sig.PSx), used for selectivity between overlapping differential protection zones. For such applications, also the hysteresis of the tripping characteristic should be enabled (setting 072 006 DIFF: Hyst. effective PSx = Yes), to avoid chattering operation for faults/test conditions close to the trip characteristic. Upon differential starting DIFF: Starting, the hysteresis gets activated, i.e. the basic threshold Idiff> (or Idiff>(CTS) respectively) is reduced to 90% of the set value. All other characteristic settings are unchanged. Thus the characteristic is "vertically" moved towards lower differential current values.

Along with this settable operate delay a starting signal was introduced for logging purposes. DIFF: Starting is signaled if a valid differential protection trip condition is determined, i.e. at least one measuring system has triggered (= measures Idiff/IR within tripping area) and is not blocked from inrush or overflux blocking, saturation discriminator or external binary input.

If differential protection is set to operate without operate delay, this starting signal is raised together with the tripping signal.

If the current transformer supervision (CTS) function is used, the basic pick-up sensitivity DIFF: Idiff> PSx can be increased to a value set at DIFF: Idiff>(CTS) PSx.

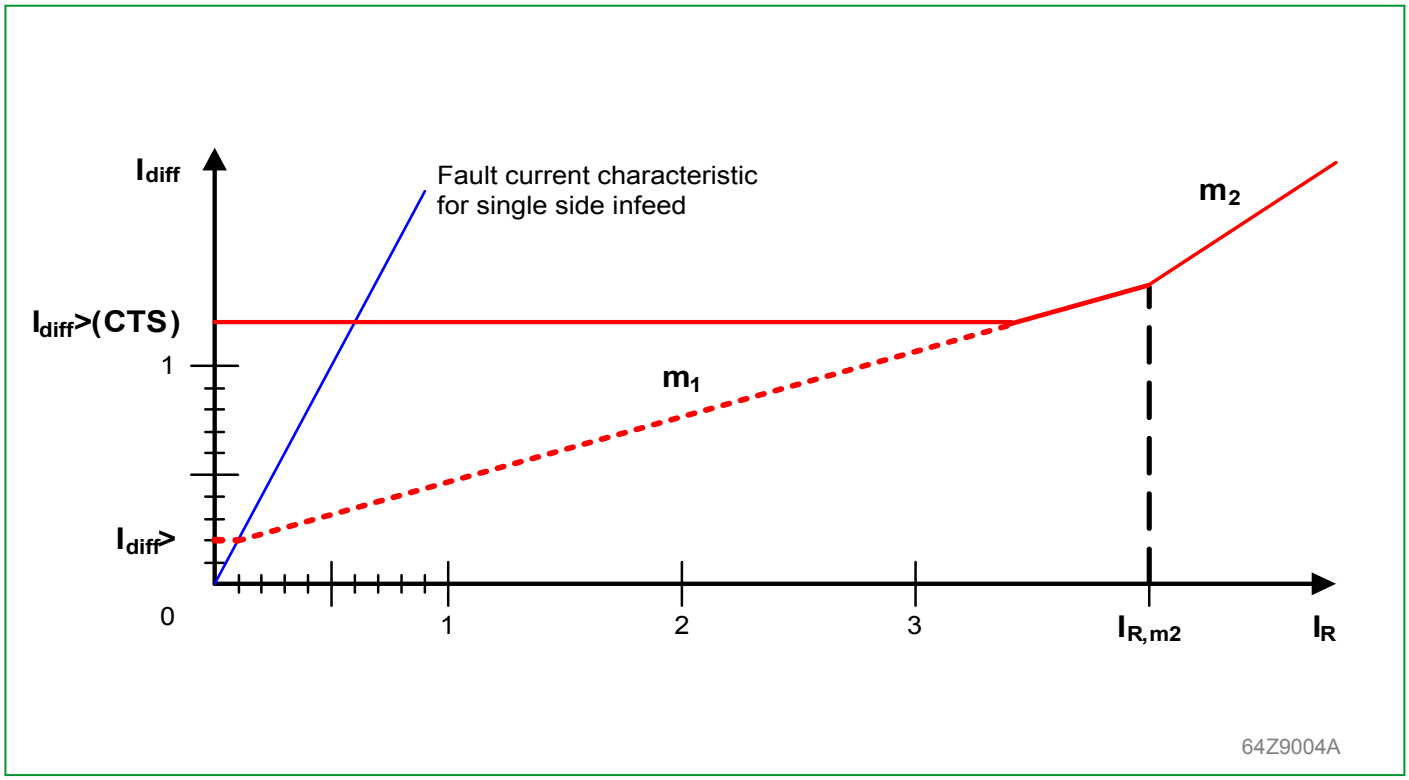

Fig. 3-104: Changing the characteristic if CTS: Idiff>(CTS)active= Yes

3.22.6 Rapid (high-set) Differential Protection

Above the adjustable threshold DIFF: Idiff>> PSx of the differential current, the P633 will trip without taking into account either the harmonic restraint or the overfluxing stabilization. If the differential current exceeds the adjustable threshold DIFF: Idiff>>> PSx, the restraining current and the saturation discriminator are no longer taken into account either, that is the P633 will trip regardless of the restraining value and the saturation discriminator.

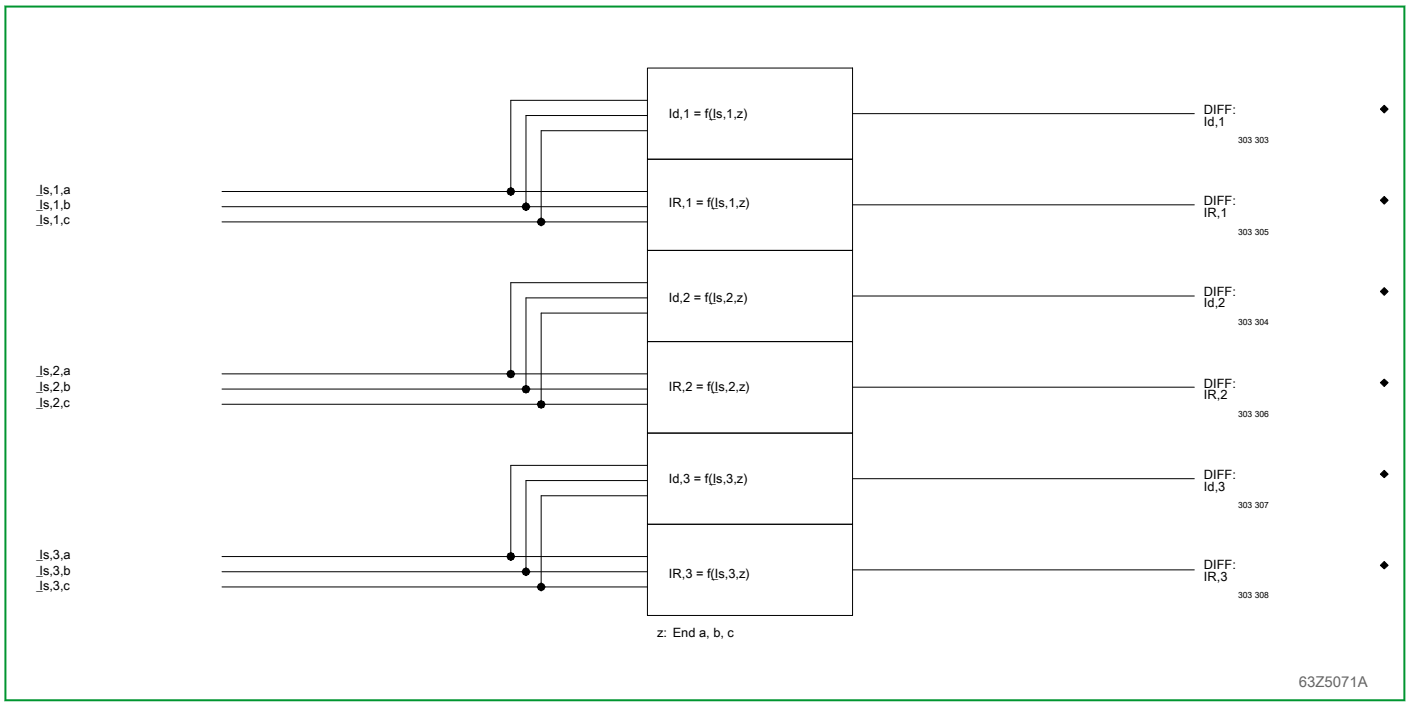

Fig. 3-105: Forming the differential and restraining currents for the three measuring systems

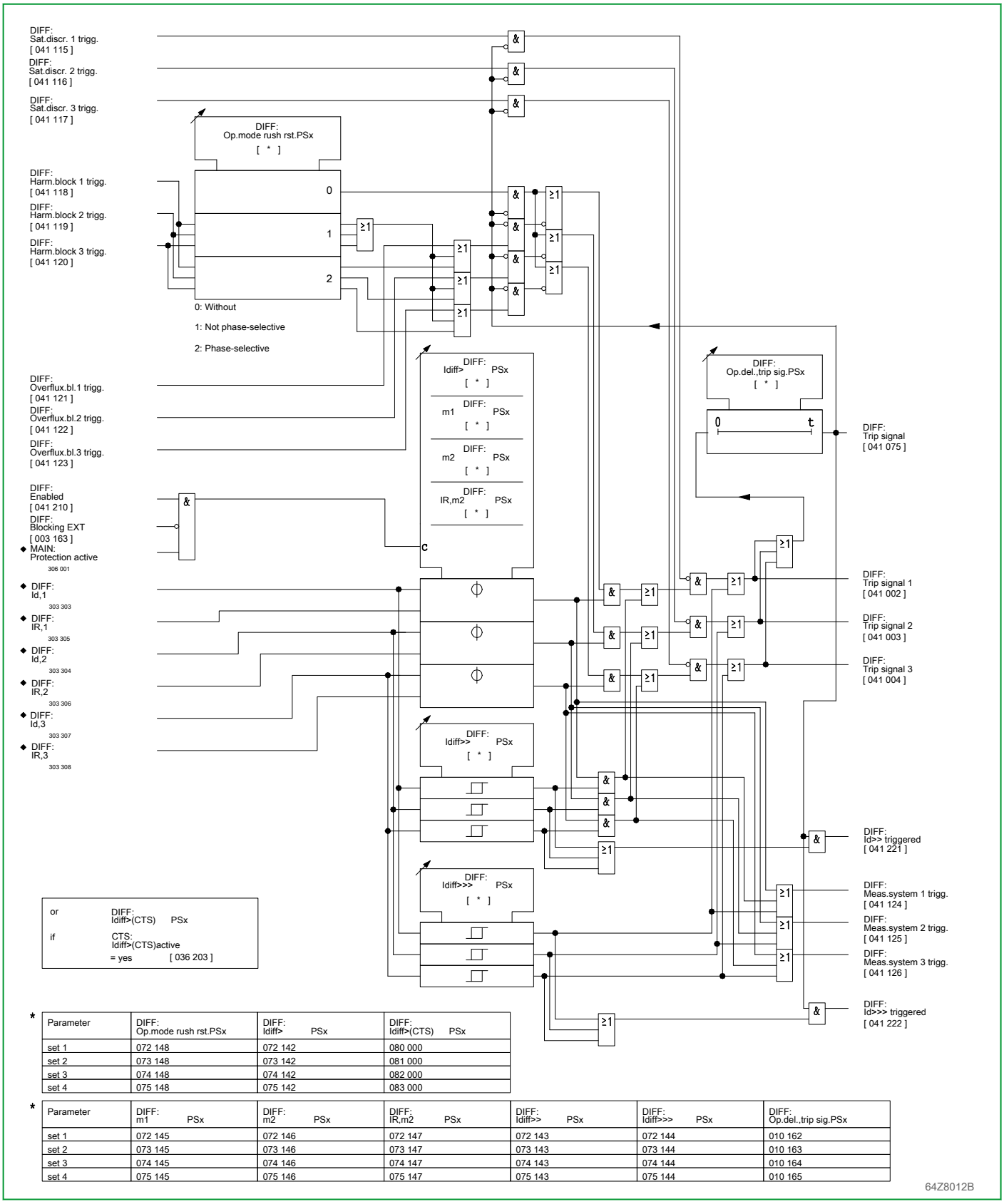

*

Parameter	DIFF: Op.mode rush rst.PSx	DIFF: Idiff> PSx	DIFF: Idiff>(CTS) PSx
set 1	072 148	072 142	080 000
set 2	073 148	073 142	081 000
set 3	074 148	074 142	082 000
set 4	075 148	075 142	083 000

*

Parameter	DIFF: m1 PSx	DIFF: m2 PSx	DIFF: IR,m2 PSx	DIFF: Idiff>> PSx	DIFF: Idiff>>> PSx	DIFF: Op.del.,trip sig.PSx
set 1	072 145	072 146	072 147	072 143	072 144	010 162
set 2	073 145	073 146	073 147	073 143	073 144	010 163
set 3	074 145	074 146	074 147	074 143	074 144	010 164
set 4	075 145	075 146	075 147	075 143	075 144	010 165

Fig. 3-106: Measuring system of the P633

3.22.7 Inrush Stabilization (2nd Harmonic Restraint)

When an unloaded transformer is connected, the inrush current at unfavorable switching instants such as for voltage zero, may have values that exceed the

transformer nominal current several times over. It takes some time for the current to assume its small stationary value. Since the high inrush current flows on the connected side only, the tripping characteristic of the P633 differential protection may give rise to a trip unless stabilizing action is taken. The fact that the inrush current has a high proportion of harmonics having twice the system frequency offers a possibility of stabilization against tripping by the inrush current.

The P633 filters the differential current. The fundamental wave $I(f_0)$ and second harmonic components $I(2 \cdot f_0)$ of the differential current are determined. If the ratio $\frac{I(2 \cdot f_0)}{I(f_0)}$ exceeds a specific adjustable value in at least one measuring system, tripping is blocked optionally in one of the following modes:

- across all three measuring systems
- selectively for one measuring system (see Fig. 3-107, (p. 3-153)).

There will be no blocking if the differential current exceeds the set threshold DIFF: Idiff>> PSx.

Operation of any inrush or overfluxing blocking element is signaled by DIFF: Harm.block. trigg..

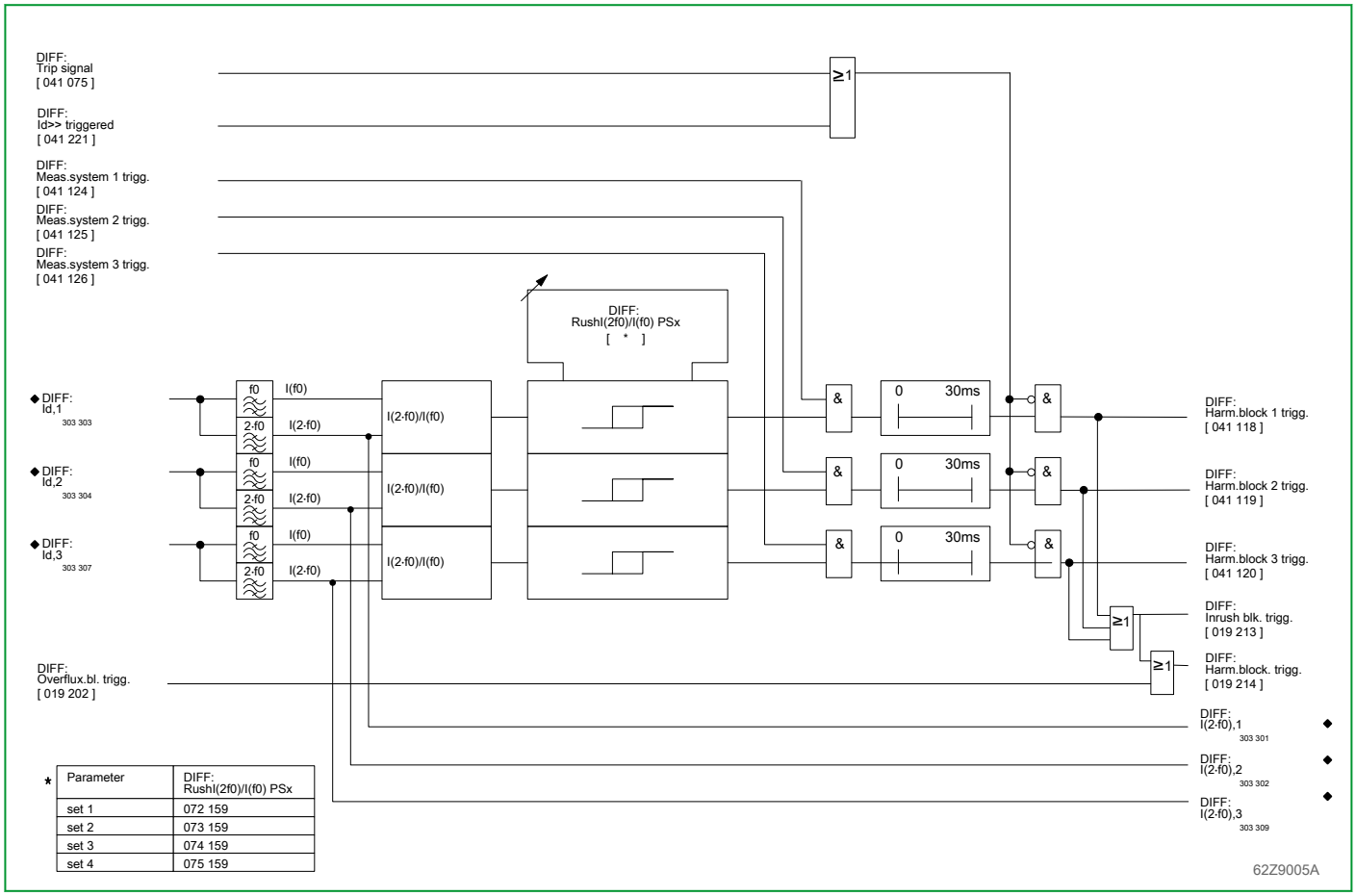

* Parameter	DIFF: RushI(2f0)/I(f0) PSx
set 1	072 159
set 2	073 159
set 3	074 159
set 4	075 159

Fig. 3-107: Inrush blocking

3.22.8 Overfluxing Stabilization (5th Harmonic Restraint)

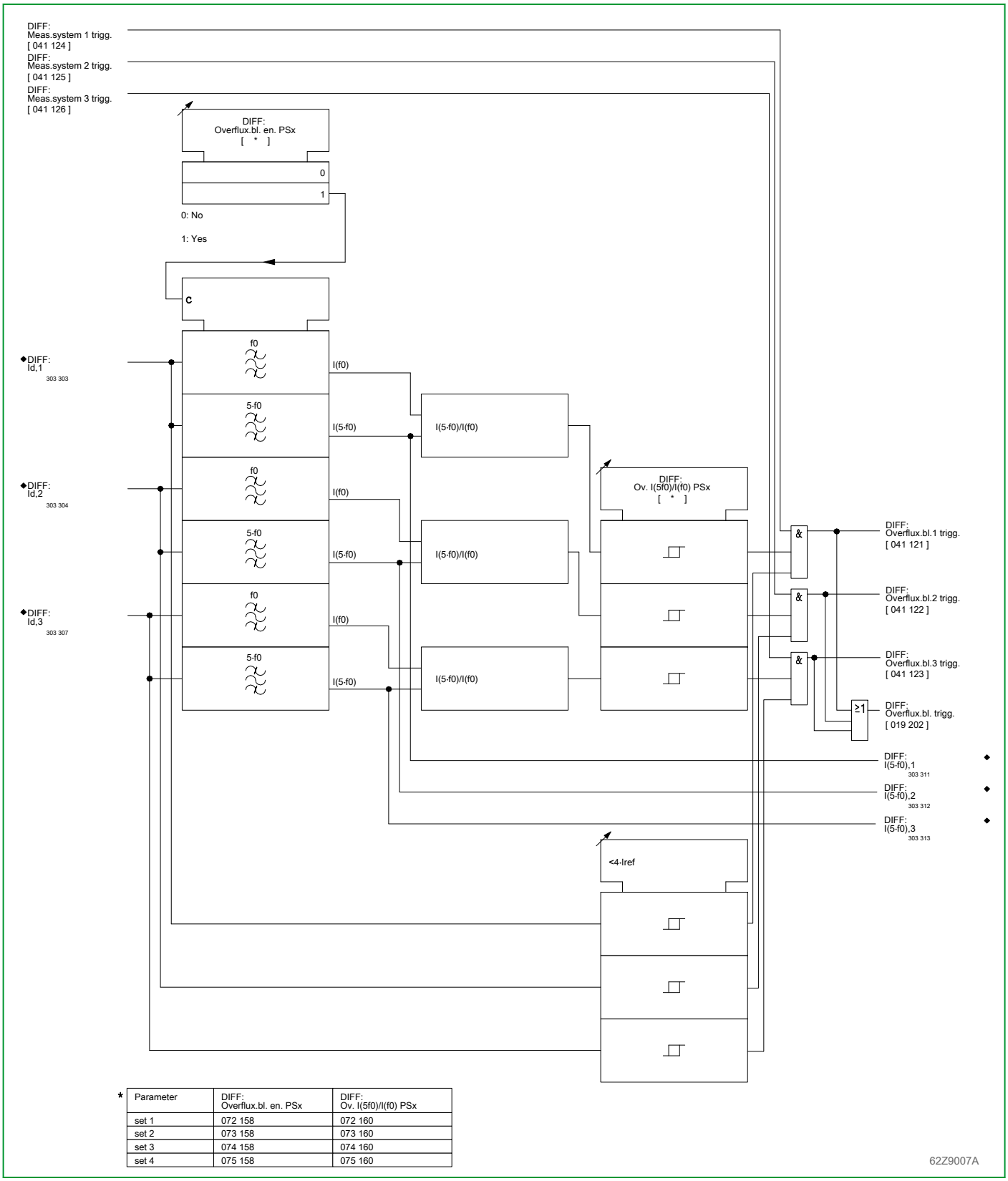

* Parameter	DIFF: Overflux.bl. en. PSx	DIFF: Ov. I(5f0)/I(f0) PSx
set 1	072 158	072 160
set 2	073 158	073 160
set 3	074 158	074 160
set 4	075 158	075 160

Fig. 3-108: Overfluxing stabilization

If the transformer is loaded with a voltage in excess of the nominal voltage, saturation effects occur. Without stabilization, these could lead to differential protection tripping. The fact that the current of the protected object under

saturation conditions has a high proportion of harmonics having five times the system frequency serves as the basis of stabilization.

The P633 filters the differential current. The fundamental wave $I(f_0)$ and fifth harmonic components $I(5 \cdot f_0)$ of the differential current are determined. If the ratio $\frac{I(5 \cdot f_0)}{I(f_0)}$ exceeds the set value DIFF: Ov. I(5f0)/I(f0) PSx in a measuring system, and if the differential current is smaller than $4 \cdot I_{ref}$, then tripping is blocked selectively for that measuring system.

3.22.9 Saturation Discriminator

Up to a certain limit, stability in the event of external faults is ensured by means of the bias. Due to the triple-slope tripping characteristic, the stabilization is particularly pronounced for high currents. However, as an additional safeguard for through-currents with transformer saturation, the P633 is provided with a saturation discriminator.

After each zero crossing of the restraining current, the saturation discriminator monitors the occurrence of the differential current over time. For internal faults, the differential current appears after a zero crossing together with the restraining current. In the case of passing currents with transformer saturation, however, a differential current will not appear until transformer saturation begins. Accordingly, a locking signal is generated on the basis of level monitoring of the differential current as compared to the restraining current, and thus the desired through-stabilization is achieved. Locking is restricted to the measuring system where an external fault was detected.

There will be no blocking if the differential current exceeds the set threshold DIFF: Idiff>>> PSx.

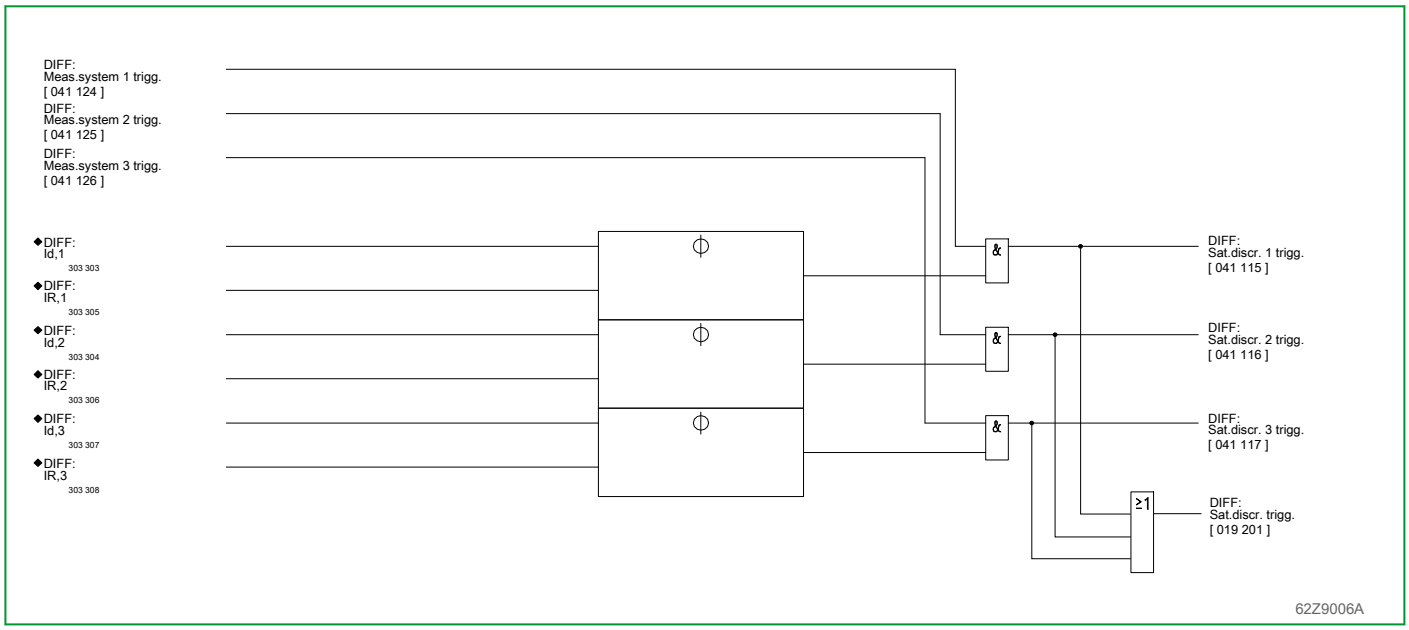

Fig. 3-109: Saturation discriminator

3.22.10 Measured Operating Data of Differential Protection

The differential and restraining currents are displayed as measured operating data provided that the set thresholds are exceeded.

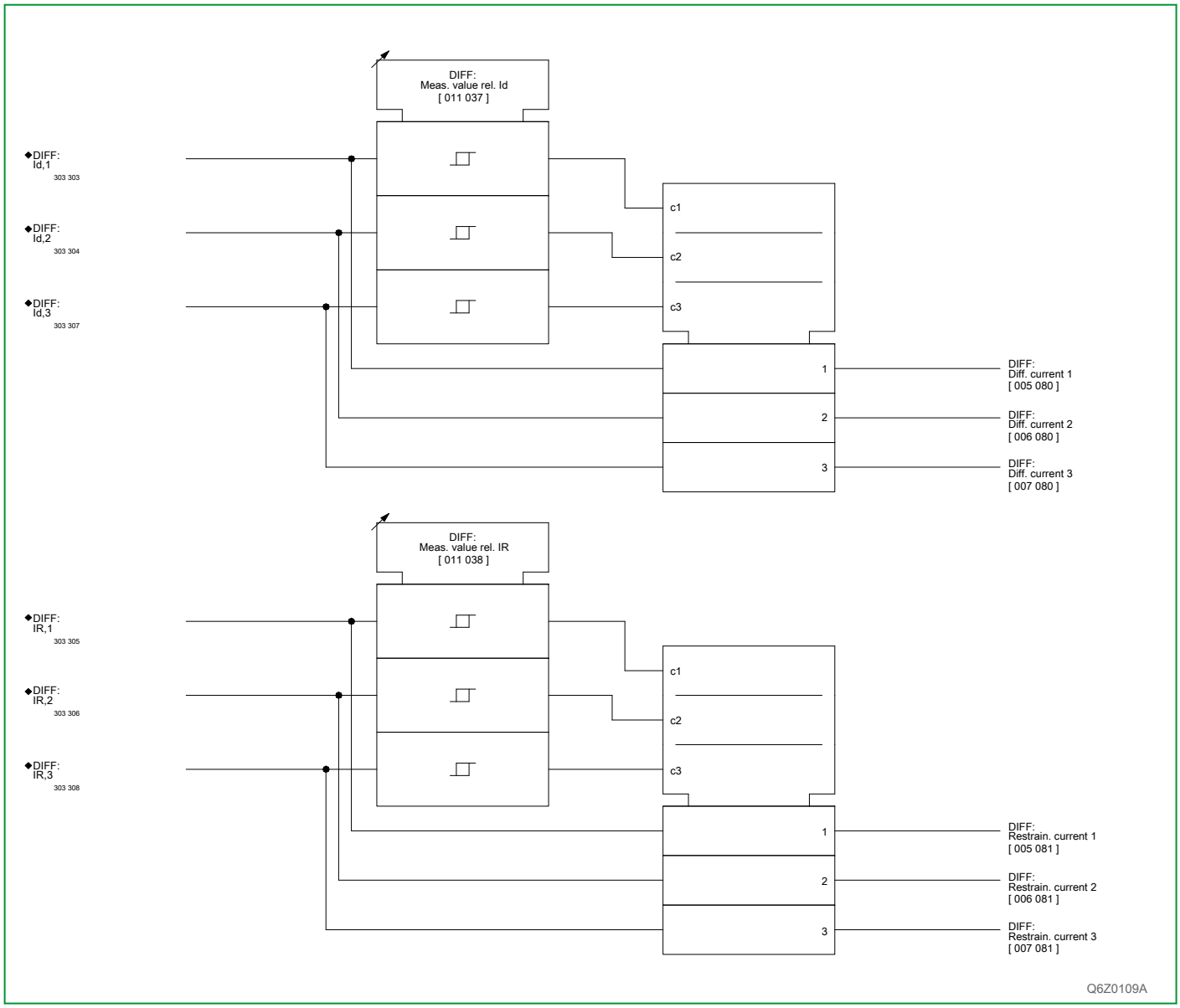

Fig. 3-110: Measured operating data of differential and restraining currents

3.23 Ground Differential Protection (Function Groups REF_1 to REF_3)

The ground differential protection function (Br.: restricted earth fault protection) can be applied to transformer windings with grounded neutral point where the neutral-point-to-ground connection is fitted with a current transformer.

One ground differential protection function is available per transformer winding. The P633 display shows the winding end associated with a particular ground differential protection function. Connection for and operation of the ground differential protection function will now be presented with end a as an example. Equivalent considerations apply to end b and c.

Ground differential protection may be applied to transformer ends with a grounded neutral-point, but in this case the neutral-point-to-ground connection must be fitted with a CT.

Ground differential protection is based on comparing the vector sum $\underline{I}_N$ of the phase currents of the relevant transformer end to the neutral-point current $\underline{I}_Y$. The P633 calculates the vector sum of the phase currents. For the connection, see Section 3.13.1, (p. 3-80).

3.23.1 Enabling or Disabling Ground Differential Protection

Ground differential protection can be enabled or disabled from the local control panel; see also Fig. 3-111, (p. 3-158). Moreover, enabling can be done separately for each parameter subset.

3.23.2 Blocking ground differential protection

Blocking of the ground differential protection functions when the DIFF protection was triggered may be enabled or disabled using setting parameters.

Furthermore, binary signal input functions (REF_1: Blocking EXT, for example) are available to allow for a more flexible application of the functions. Since operational readiness is no longer solely dependent on the device setting, the readiness of ground differential protection is also indicated (by means of the REF_1: Ready state, for example).

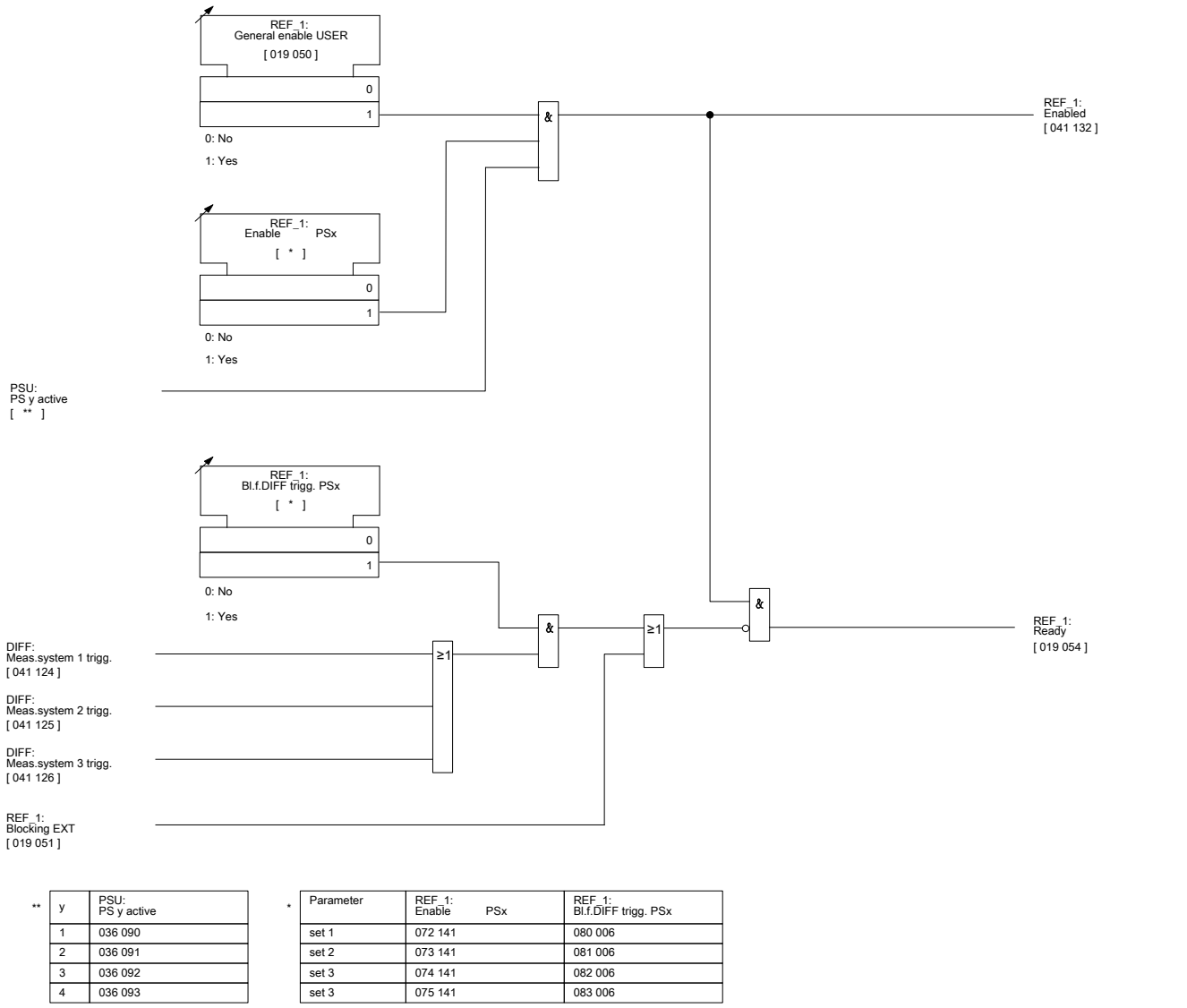

** y	PSU: PS y active
1	036 090
2	036 091
3	036 092
4	036 093

* Parameter	REF_1: Enable PSx	REF_1: Bl.f.DIFF trigg. PSx
set 1	072 141	080 006
set 2	073 141	081 006
set 3	074 141	082 006
set 3	075 141	083 006

Fig. 3-111: Enabling, disabling and readiness of ground differential protection

3.23.3 Amplitude Matching

For amplitude matching, the nominal power of the transformer end should first be set as the reference power. The reference current is then calculated by the P633 on the basis of the set reference power and the set primary nominal voltage of the transformer end.

$$I_{ref,N,a} = \frac{S_{ref}}{\sqrt{3} \cdot V_{nom,a}}$$

S_{ref}: reference power

$I_{ref,N,a}$: reference current of the ground differential protection function, end a

$V_{nom,a}$: nominal voltage, end a

The P633 calculates the matching factors on the basis of the reference currents and the set primary nominal currents of the system transformers.

$$k_{am,N,a} = \frac{I_{nom,a}}{I_{ref,N,a}}$$

$$k_{am,Y,a} = \frac{I_{nom,Y,a}}{I_{ref,N,a}}$$

with

am: amplitude-matched

$I_{nom,a}$: primary nominal current of the main current transformer

$I_{nom,Y,a}$: primary nominal current of current transformer in the neutral-point-to-ground connection

Reference currents and matching factors are displayed at the P633.

The P633 checks that the reference current and matching factor are within their permissible ranges. The acceptable range for the reference current can be read out from the operating program. The following applies to the matching factors:

- The matching factor must always be ≤ 16.
- The value for the smaller matching factor ($k_{am,min}$) must always be ≥ 0.5.

Should the P633 calculate a reference current or matching factors not meeting the above conditions then an alarm will be issued and the P633 will be blocked automatically.

The measured values are multiplied by the relevant matching factors and are then available for further processing. Consequently, all threshold values and measured values always refer back to the relevant reference current rather than to the transformer nominal current or the nominal current of the device.

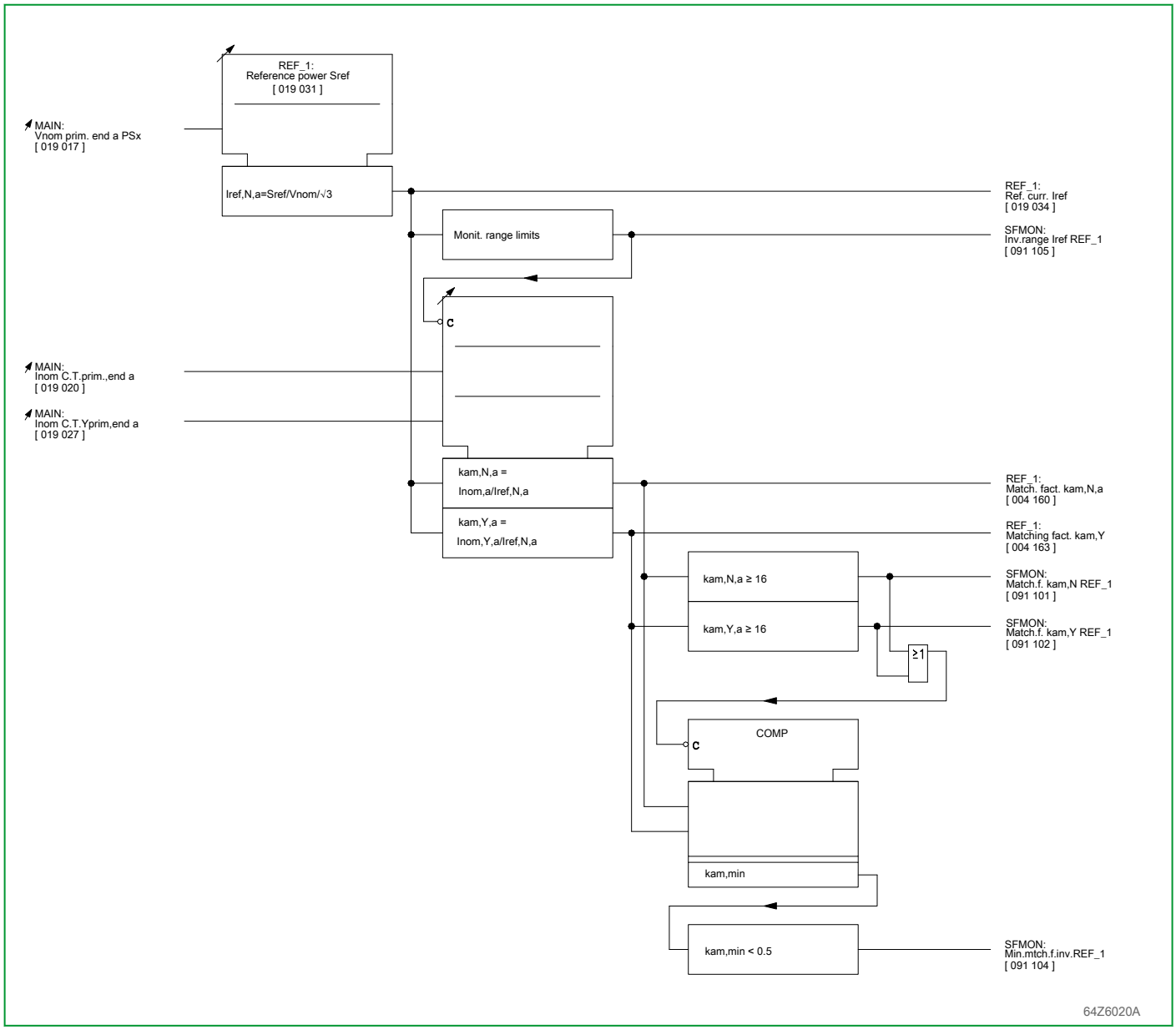

Fig. 3-112: Calculating and monitoring the matching factors

3.23.4 Operating Modes

The user can choose among three operating modes.

Address				Description	Range of Values
PS1	PS2	PS3	PS4		
072 149	073 149	074 149	075 149	REF_1: Operating mode PSx	*Low imped. / sum(IP)* (default) *Low imped. / IP,max* *High impedance*
072 169	073 169	074 169	075 169	REF_2: Operating mode PSx	*Low imped. / sum(IP)* (default) *Low imped. / IP,max* *High impedance*
072 049	073 049	074 049	075 049	REF_3: Operating mode PSx	*Low imped. / sum(IP)* (default) *Low imped. / IP,max* *High impedance*

3.23.4.1 *"Low imped. / sum(IP)"* Operating Mode

From the amplitude-matched resultant currents $\underline{I}_{am,N,a}$ and $\underline{I}_{am,Y,a}$, the differential and restraining currents are calculated as follows:

$I_{d,N,a} = |\underline{I}_{am,N,a} + \underline{I}_{am,Y,a}|$

$I_{R,N,a} = |\underline{I}_{am,N,a}|$

Again, the equation for the differential current applies under the condition of uniformly defined current arrows relative to the protected object. Both current arrows point either towards the protected object or away from it.

Fig. 3-113, (p. 3-162) shows the tripping characteristic of the ground differential protection function. The characteristic equation is as follows:

$$\frac{I_{d,N,a}}{I_{ref}} = \frac{I_{diff>,N,a}}{I_{ref,N,a}} + 1.005 \cdot \frac{I_{R,N,a}}{I_{ref,N,a}}$$

with

$I_{diff>,N,a}$: setting at REF_1: Idiff> PSx

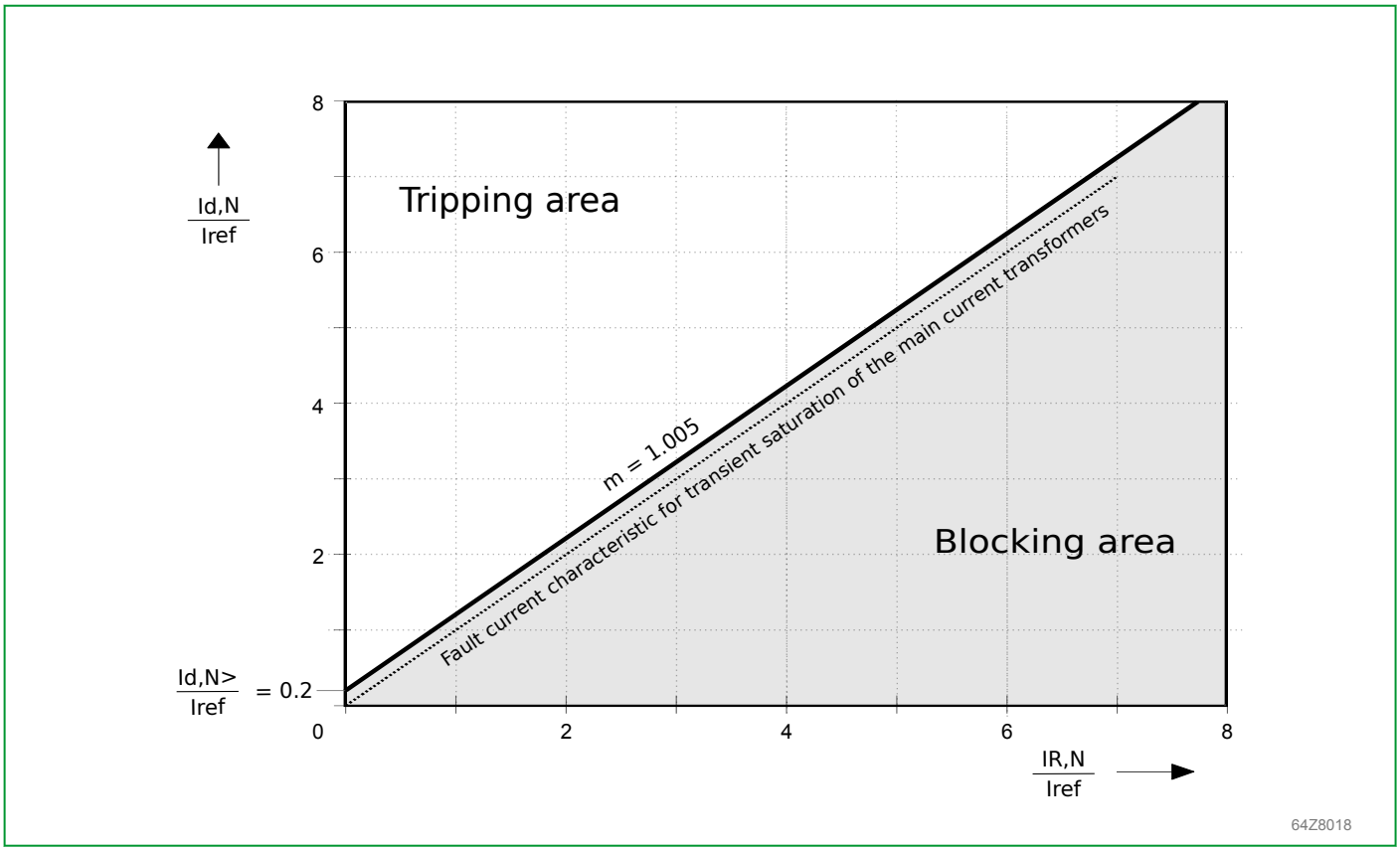

Fig. 3-113: Tripping characteristic of ground differential protection with the "Low imped. / sum(IP)" operating mode

3.23.4.2 *"Low imped. / IP,max"* Operating Mode

Using this operating mode differential current Id and restraining current IR are defined as follows:

$$I_d = \left| k_{am,P} \cdot \sum \{\underline{I}_A, \underline{I}_B, \underline{I}_C\} + k_{am,Y} \cdot \underline{I}_Y \right|$$

$$I_R = \frac{1}{2} \cdot \left(k_{am,P} \cdot \max\{ \left|\underline{I}_A\right|, \left|\underline{I}_B\right|, \left|\underline{I}_C\right| \} + k_{am,Y} \cdot \left|\underline{I}_Y\right| \right)$$

When compared to the "*Low imped. / sum(IP)*" operating mode, a double slope tripping characteristic can be used here because of the definition of the restraining current (see Fig. 3-114, (p. 3-163)). In particular, this tripping characteristic permits a tripping test under load current by shorting a phase current (to simulate residual current) without the need of star point current I_Y.

Besides the $I_{diff>}$ parameter, already available to set the basic pick-up sensitivity, the following parameters are also provided with the "*Low imped. / IP,max*" operating mode to set the tripping characteristic; in this case $I_{R,m2}$ is equivalent to I_{ref}.

Address				Description	Range of Values *
PS1	PS2	PS3	PS4		
072 162	073 162	074 162	075 162	REF_1: m1 PSx	0.00 ... {0.20} ... 1.00
072 163	073 163	074 163	075 163	REF_1: m2 PSx	0.15 ... {1.50}
072 164	073 164	074 164	075 164	REF_1: IR,m2 PSx	0.10 ... {1.00} ... 1.50
072 172	073 172	074 172	075 172	REF_2: m1 PSx	0.00 ... {0.20} ... 1.00
072 165	073 165	074 165	075 165	REF_2: m2 PSx	0.15 ... {1.50}
072 166	073 166	074 166	075 166	REF_2: IR,m2 PSx	0.10 ... {1.00} ... 1.50
072 192	073 192	074 192	075 192	REF_3: m1 PSx	0.00 ... {0.20} ... 1.00
072 193	073 193	074 193	075 193	REF_3: m2 PSx	0.15 ... {1.50}
072 194	073 194	074 194	075 194	REF_3: IR,m2 PSx	0.10 ... {1.00} ... 1.50

* Default setting in curly braces {}

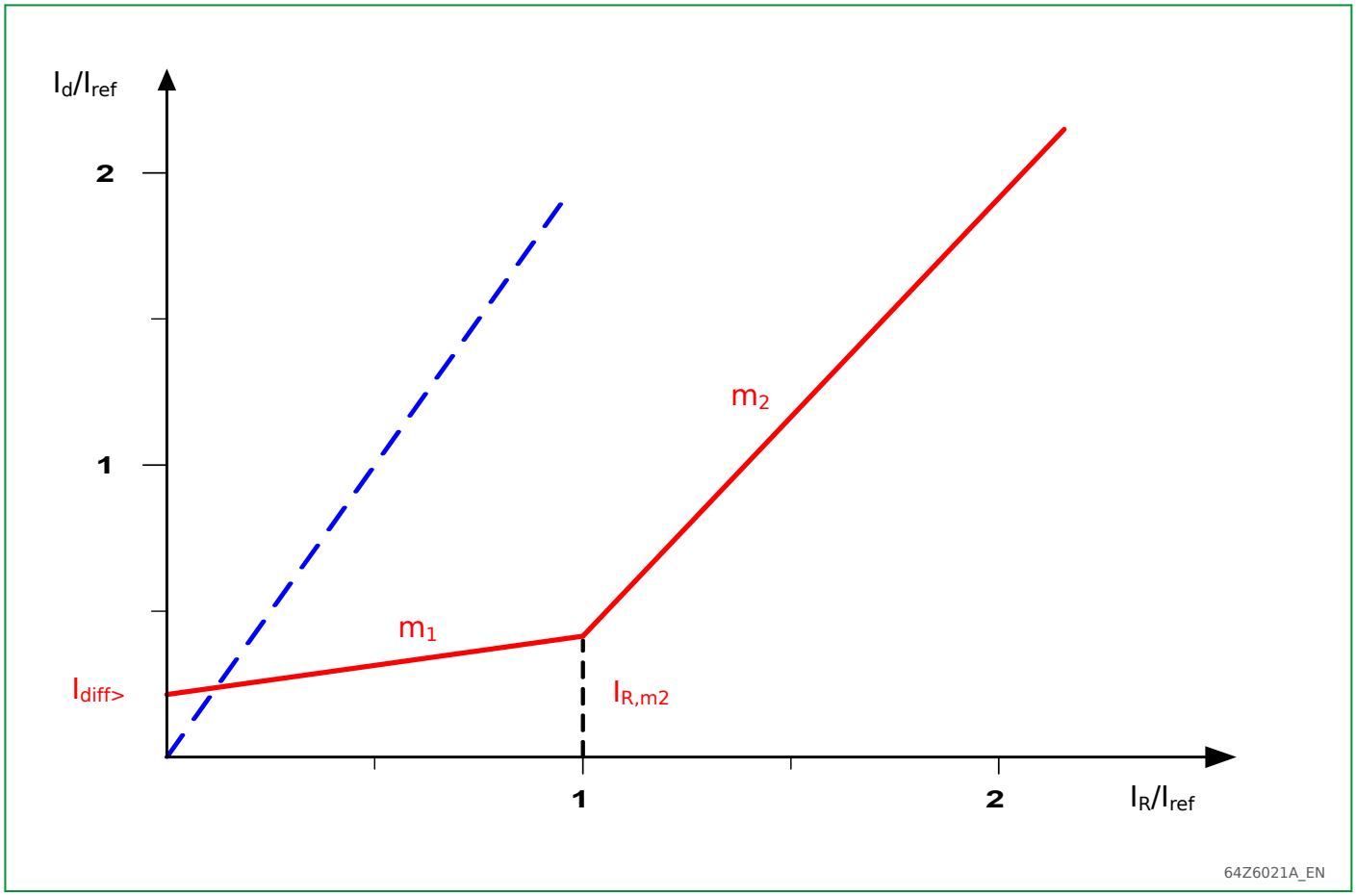

Fig. 3-114: Tripping characteristic of the ground differential protection with the “Low imped. / IP,max” operating mode

3.23.4.3 *"High impedance"* Operating Mode

This operating mode is provided for application with the high impedance current measuring approach. The pick-up sensitivity is set via the $I_{diff>}$ parameter which is already available.

3.23.5 Idiff>>> Threshold

The restraining quantity is no longer taken into account when the differential current value exceeds the threshold set at REF_1: Idiff>>> PSx. Therefore the P633 will issue a trip signal independently of the restraining quantity.

3.23.6 Applying Current Transformer Supervision

When applying current transformer supervision (CTS), the ground differential protection function may be blocked for the relevant end where a CT fault is detected. See details given in Section 3.30, (p. 3-211).

When a CTS alarm signal is issued for one of the transformer ends (for example CTS: Alarm end a), the associated ground differential protection function is then blocked, if it has been set accordingly (for example by assigning REF_1 to end a: REF_1: CTS effective PSx = Yes).

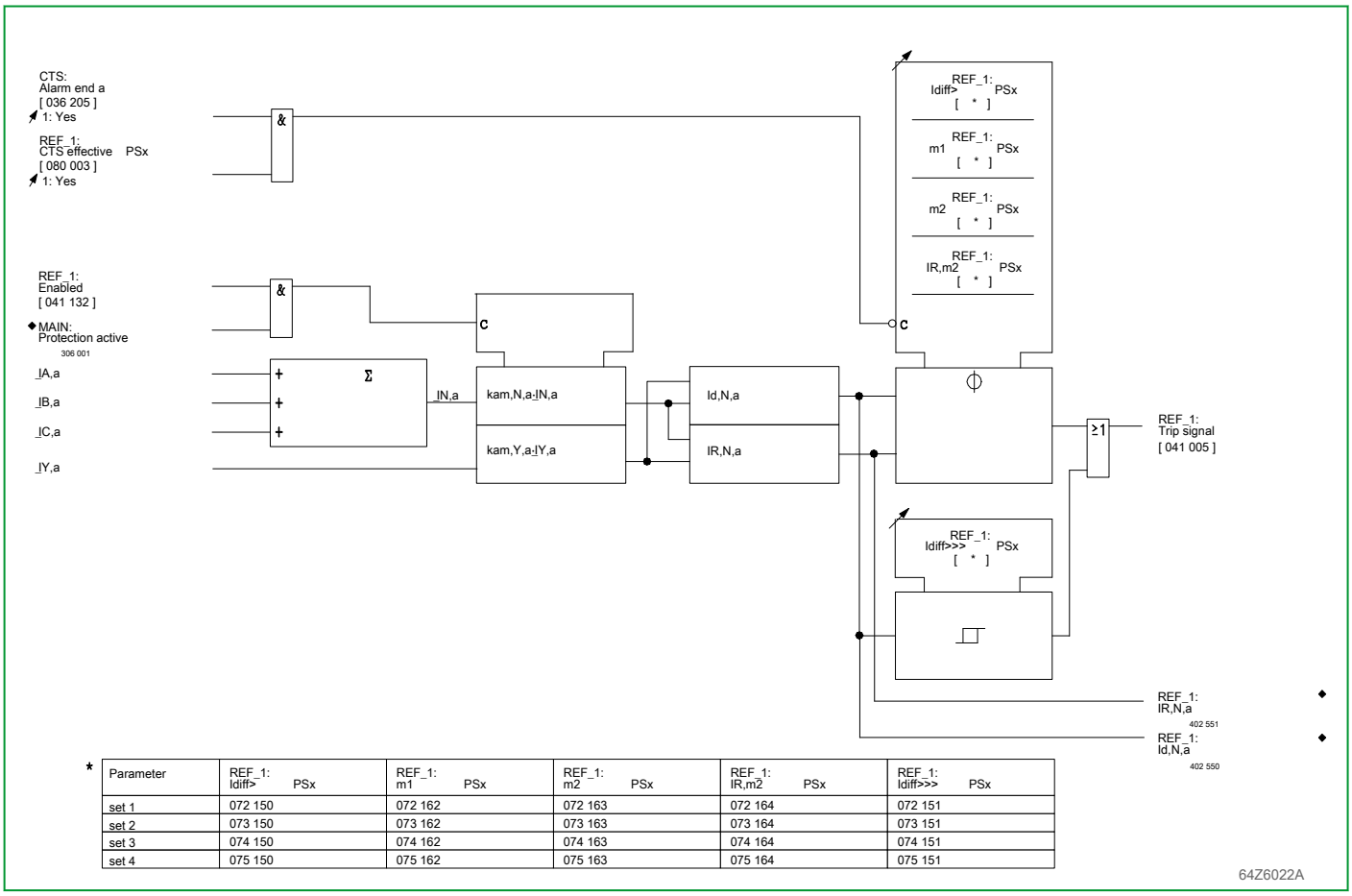

Parameter	REF_1: Idiff> PSx	REF_1: m1 PSx	REF_1: m2 PSx	REF_1: IR,m2 PSx	REF_1: Idiff>>> PSx
set 1	072 150	072 162	072 163	072 164	072 151
set 2	073 150	073 162	073 163	073 164	073 151
set 3	074 150	074 162	074 163	074 164	074 151
set 4	075 150	075 162	075 163	075 164	075 151

Fig. 3-115: Measuring system of the P633, shown here for REF_1

3.23.7 Measured Operating Data of Ground Differential Protection

The differential and restraining currents are displayed as measured operating data provided that the set thresholds are exceeded.

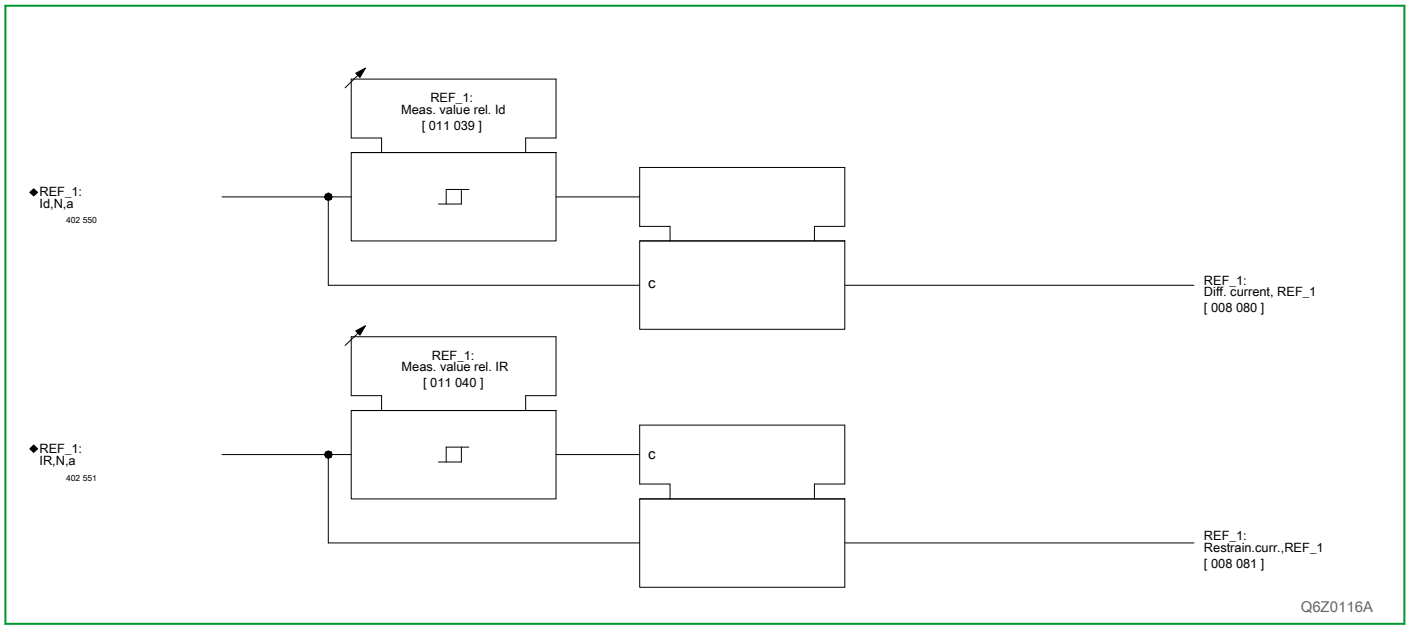

Fig. 3-116: Measured operating data of differential and restraining currents

3.23.8 Protection of Autotransformers

Function group REF_1 provides a protection function, stabilized by a characteristic, for autotransformers; a typical example is displayed in the next figure. In this case, the phase currents in ends a and b as well as the neutral-point current must be taken into account.

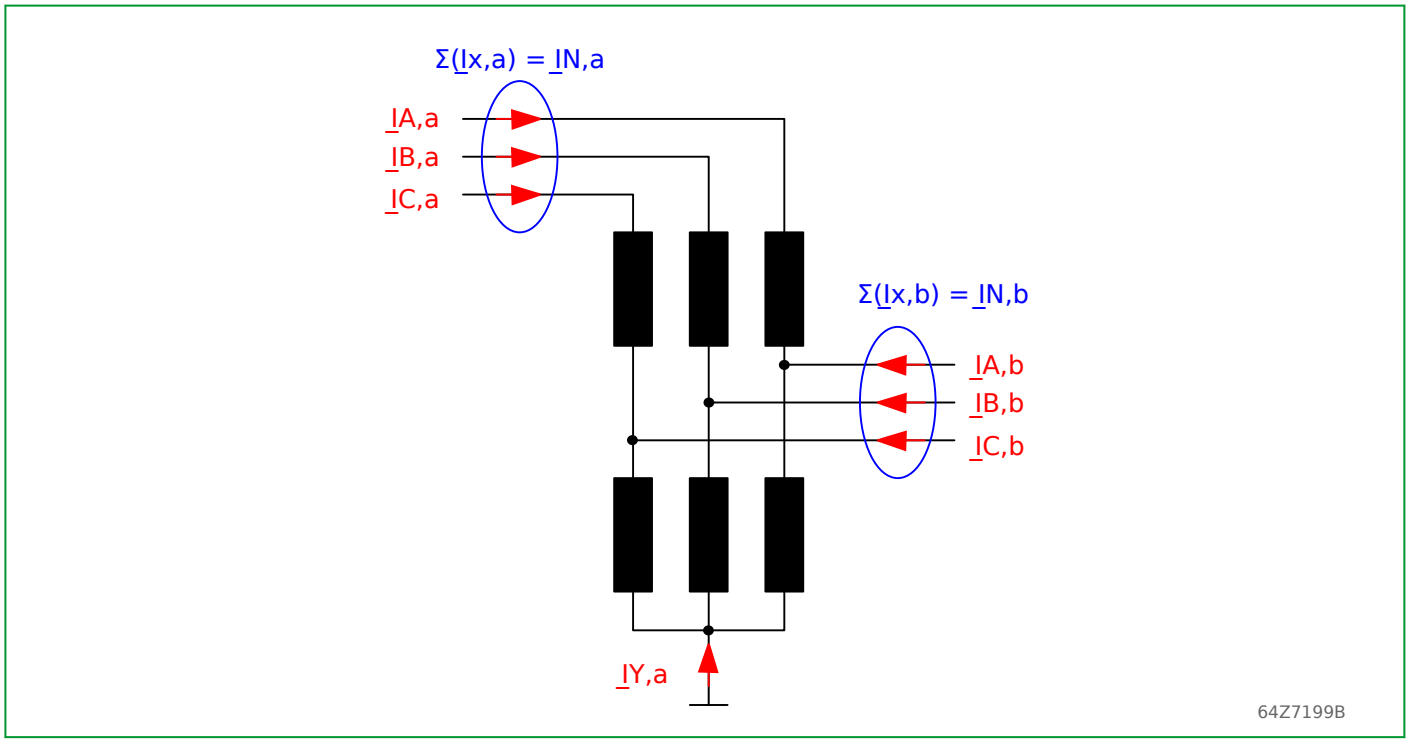

Fig. 3-117: Currents with an autotransformer

For such applications with REF_1, the transformer ends b or c may be selected, and end a is permanently included in the protection function.

(019 120) REF_1: Add.meas.inp. end b = Yes / No (default setting is “No”)

(019 121) REF_1: Add.meas.inp. end c = Yes / No (default setting is “No”)

The neutral-point current is permanently assigned to the measuring input for end a (T14).

A further amplitude matching factor is calculated and displayed by the P633 for each end added. All currents involved must be referred to a common reference value as this application entails protection of an electric node in a zero-sequence system. This common reference current value is calculated based on the settable reference power and the nominal voltage for end a. The amplitude matching factors then result from the ratio of the primary transformer current values for the relevant end and the common reference current value.

Reference current: $I_{ref} = \frac{S_{ref,prim}}{\sqrt{3} \cdot V_{nom,prim,a}}$

Amplitude matching factor: $k_{am,x} = \frac{I_{nom,CT,prim,x}}{I_{ref}}$

for x = End a, b, c

with

$S_{ref,\ prim}$ = (019 031) REF_1: Reference power Sref

$V_{nom,\ prim\ a}$ = (019 017) MAIN: Vnom prim. end a PSx

$I_{nom,\ CT,\ prim\ a}$ = (019 020) MAIN: Inom C.T.prim.,end a

$I_{nom,\ CT,\ prim\ b}$ = (019 021) MAIN: Inom C.T.prim.,end b

$I_{nom,\ CT,\ prim\ c}$ = (019 022) MAIN: Inom C.T.prim.,end c

The reference current and matching factors for the transformer ends are displayed at the P633.

As before, the P633 checks that the reference current and matching factors remain within the permitted ranges. The permitted range for the reference current can be looked up in the operating system. The following rule applies to the matching factors:

- The largest matching factor must be ≤ 16.
- The value for the second largest matching factor must come to ≥ 0.5.

There are no restrictions concerning further possible matching factors.

Should the P633 calculate a common reference current value or matching factors not satisfying the above conditions then an alarm will be issued and the P633 will automatically be blocked.

The measured values are multiplied by the matching factors and they are then available for further processing. **Consequently, all threshold values and measured values always refer back to the relevant reference current rather than to the transformer nominal current or the nominal current of the device.**

As shown below, the differential current is formed from the sum of all phase currents involved and the neutral-point current:

$I_{diff,N} = |k_{am,a} \cdot \underline{I}_{N,a} + k_{am,b} \cdot \underline{I}_{N,b} + k_{am,c} \cdot \underline{I}_{N,c} + k_{am,Y} \cdot \underline{I}_{a,Y}|$

$= |k_{am,a} \cdot \Sigma\{\underline{I}_{A,a}, \underline{I}_{B,a}, \underline{I}_{C,a}\} + k_{am,b} \cdot \Sigma\{\underline{I}_{A,b}, \underline{I}_{B,b}, \underline{I}_{C,b}\} + k_{am,c} \cdot \Sigma\{\underline{I}_{A,c}, \underline{I}_{B,c}, \underline{I}_{C,c}\} + k_{am,Y} \cdot \underline{I}_{a,Y}|$

The calculation of the restraining current depends on the set operating mode.

If the operating mode is set to “*Low imped. / sum(IP)*”, the restraining current is calculated from the sum of all involved ends:

$I_{R,N} = |k_{am,a} \cdot \underline{I}_{N,a} + k_{am,b} \cdot \underline{I}_{N,b} + k_{am,c} \cdot \underline{I}_{N,c}|$

$= |k_{am,a} \cdot \Sigma\{\underline{I}_{A,a}, \underline{I}_{B,a}, \underline{I}_{C,a}\} + k_{am,b} \cdot \Sigma\{\underline{I}_{A,b}, \underline{I}_{B,b}, \underline{I}_{C,b}\} + k_{am,c} \cdot \Sigma\{\underline{I}_{A,c}, \underline{I}_{B,c}, \underline{I}_{C,c}\}|$

If the operating mode is set to “*Low imped. / IP,max*”, the formula to calculate the restraining current remains unchanged from the application for a single end.

But now the highest phase current is calculated from the amplitude-matched sum of the currents on the relevant phase of all ends involved.

$I_{R,N} = 0.5 \cdot (\max\{|\underline{I}_A|, |\underline{I}_B|, |\underline{I}_C|\} + k_{am,Y} \cdot |\underline{I}_{a,Y}|)$ (unchanged)

with $\underline{I}_x = k_{am,a} \cdot \underline{I}_{x,a} + k_{am,b} \cdot \underline{I}_{x,b} + k_{am,c} \cdot \underline{I}_{x,c}$ for x = A, B or C

The value pairs ($I_{d,N}$ / $I_{R,N}$) calculated with the above formula are then compared with the already identified tripping characteristics of the ground differential protection function.

3.24 Definite-Time Overcurrent Protection (Function Groups DTOC1 to DTOC3)

In the P633, a three-stage definite-time overcurrent protection function (DTOC protection) is available for up to three transformer ends. The measured values to be monitored by the respective DTOC functions are selected using a setting parameter.

These values can also be quantities formed by summation of the current values from two user-selected transformer ends.

Phase current values as well as negative-sequence and residual current measured values are monitored.

The function group DTOC1 will serve as an example to illustrate the operation of the DTOC protection functions. The same will apply to function groups DTOC2 and DTOC3.

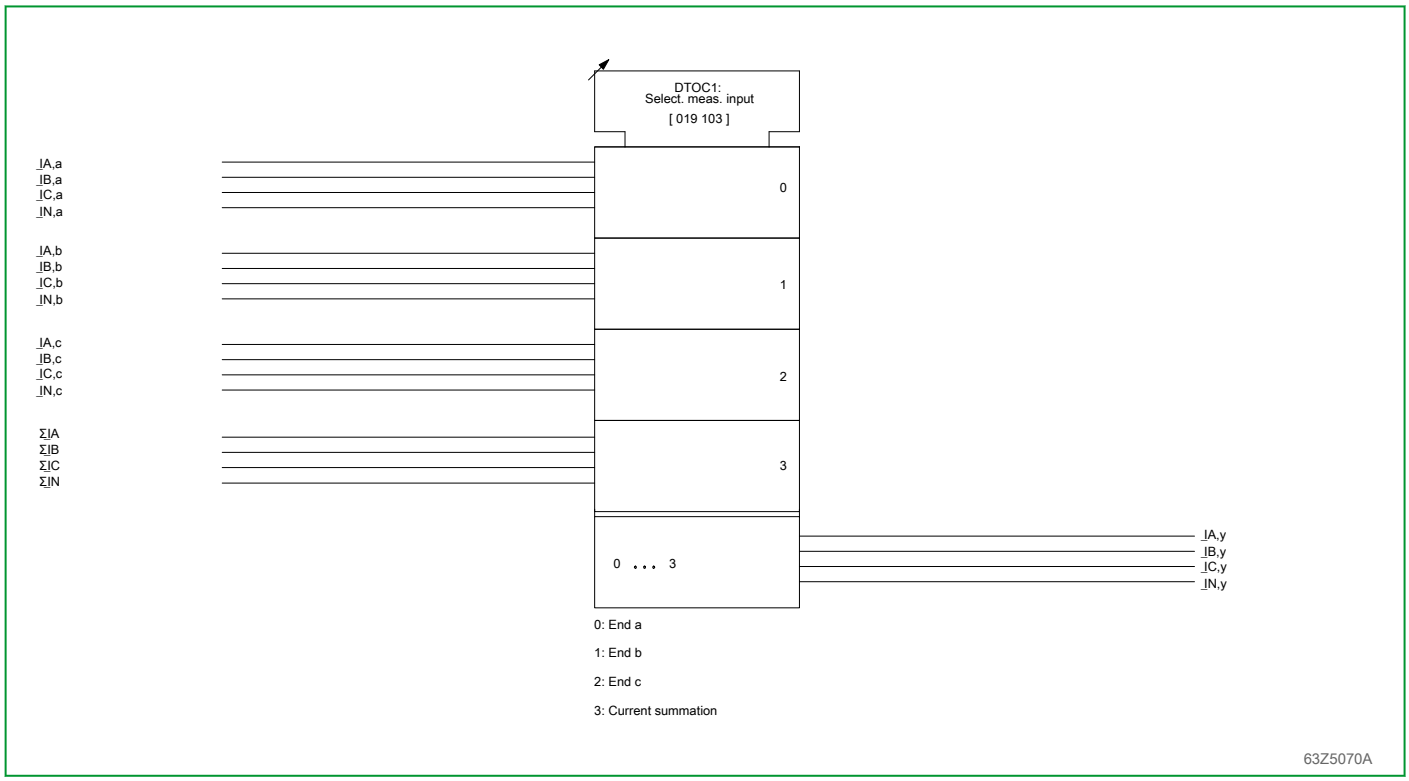

Fig. 3-118: Selection of measured values for DTOC protection

3.24.1 Enabling or Disabling DTOC Protection

DTOC protection can be enabled or disabled using setting parameters. Moreover, enabling can be carried out separately for each parameter set.

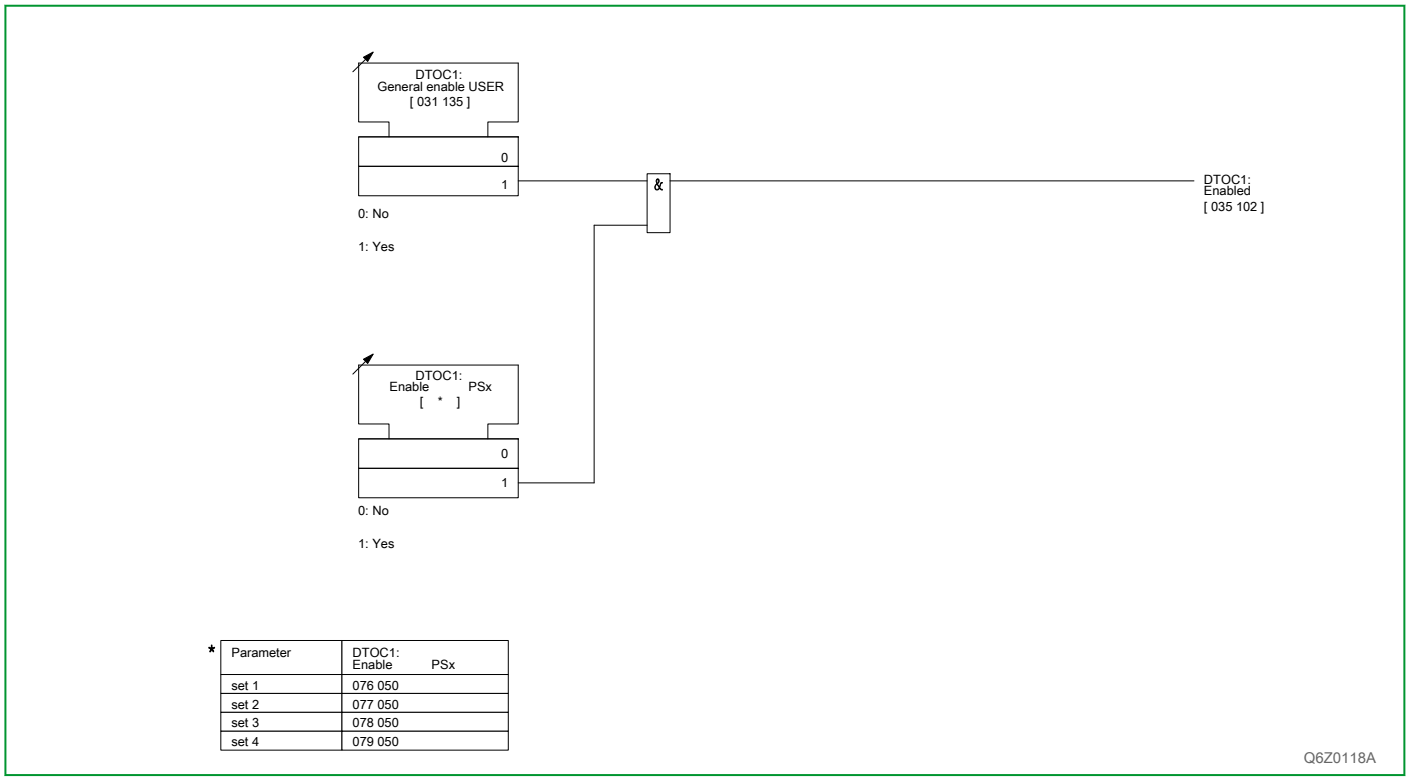

* Parameter	DTOC1: Enable PSx
set 1	076 050
set 2	077 050
set 3	078 050
set 4	079 050

Fig. 3-119: Enabling or disabling DTOC protection

3.24.2 Phase Current Stages

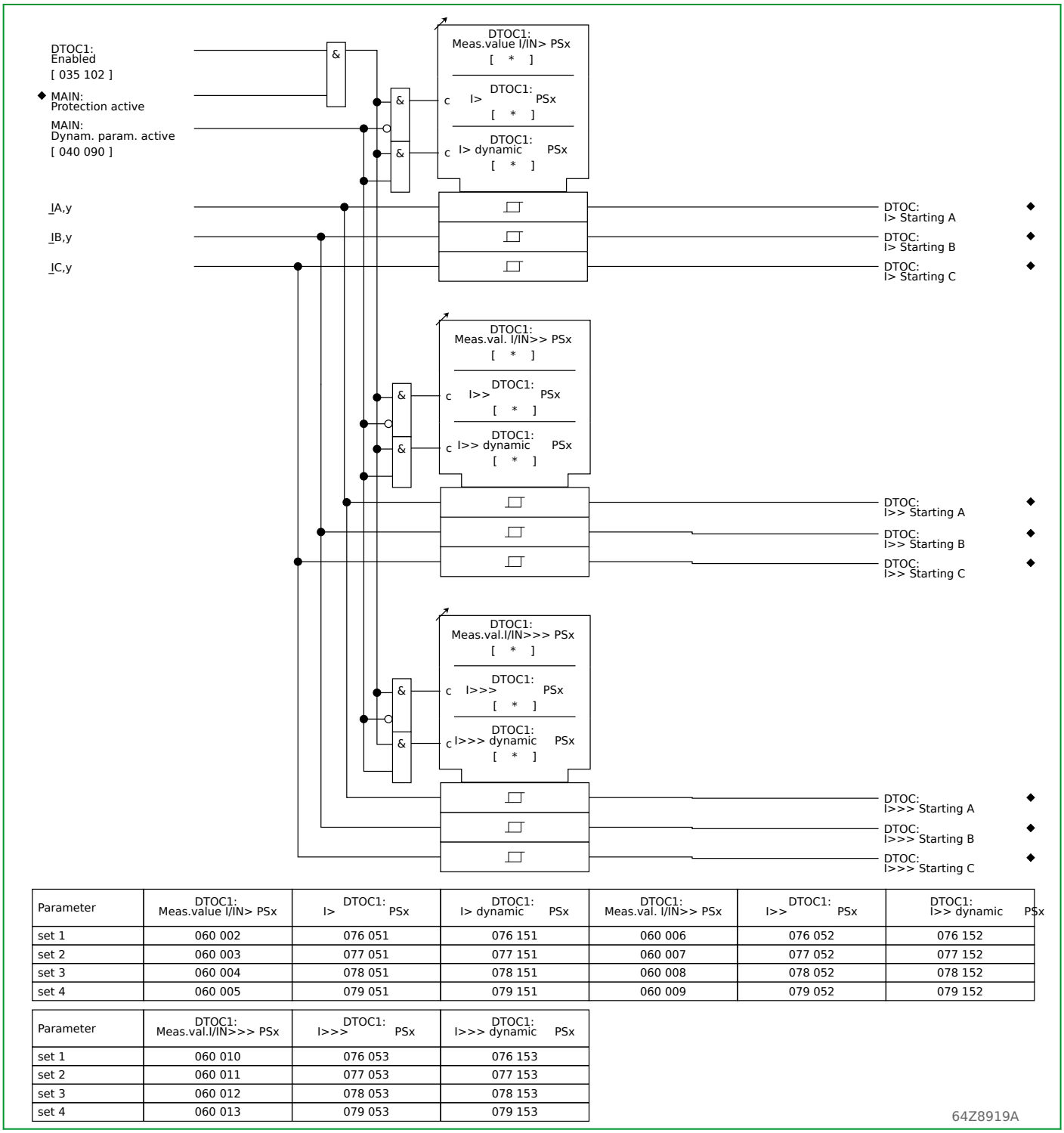

Parameter	DTOC1: Meas.value I/IN> PSx	DTOC1: I> PSx	DTOC1: I> dynamic PSx	DTOC1: Meas.val. I/IN>> PSx	DTOC1: I>> PSx	DTOC1: I>> dynamic PSx
set 1	060 002	076 051	076 151	060 006	076 052	076 152
set 2	060 003	077 051	077 151	060 007	077 052	077 152
set 3	060 004	078 051	078 151	060 008	078 052	078 152
set 4	060 005	079 051	079 151	060 009	079 052	079 152

Parameter	DTOC1: Meas.val.I/IN>>> PSx	DTOC1: I>>> PSx	DTOC1: I>>> dynamic PSx
set 1	060 010	076 053	076 153
set 2	060 011	077 053	077 153
set 3	060 012	078 053	078 153
set 4	060 013	079 053	079 153

Fig. 3-120: Phase current stages, internal overcurrent startings.

The three phase currents are monitored by the P633 with three-stage functions to detect when they exceed the set thresholds. One of two different threshold types can be active. The “dynamic” thresholds are active for the set hold time for the “dynamic parameters” (see Section 3.13.8, (p. 3-102)) and the “normal” thresholds are active when no hold time is running.

There is also a separate setting for each overcurrent stage whether the starting decision shall be based on the fundamental or on the r.m.s. value.

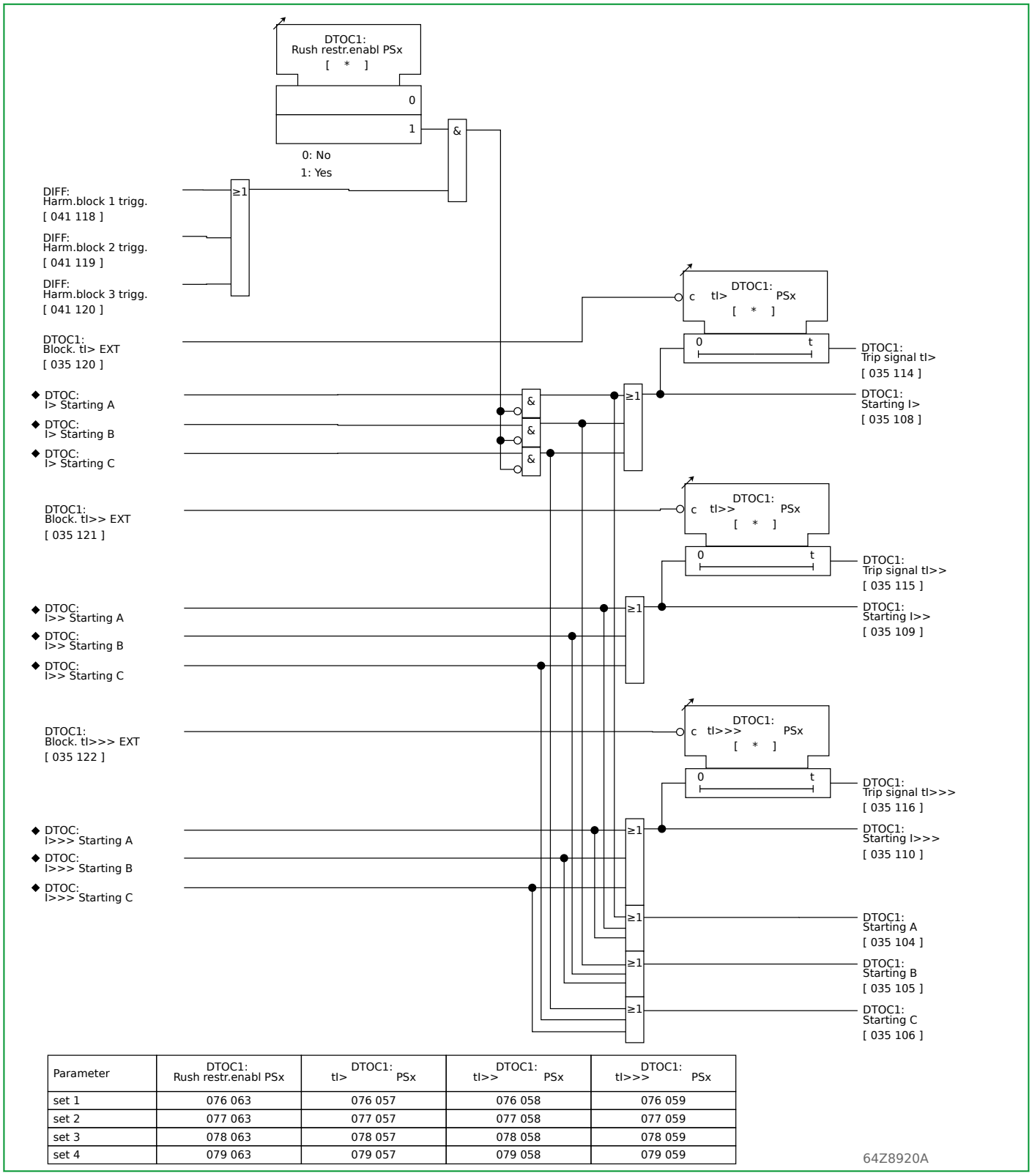

Parameter	DTOC1: Rush restr.enabl PSx	DTOC1: tI> PSx	DTOC1: tI>> PSx	DTOC1: tI>>> PSx
set 1	076 063	076 057	076 058	076 059
set 2	077 063	077 057	077 058	077 059
set 3	078 063	078 057	078 058	078 059
set 4	079 063	079 057	079 058	079 059

Fig. 3-121: Phase current stages, starting signals.

The first stage of the DTOC protection function can optionally be blocked by the inrush stabilization function of differential protection.

If the current exceeds the set thresholds in one phase, timer stages are started. Once the time delays have elapsed, a trip signal is issued. The timer stages can be blocked by appropriately configured binary signal inputs.

3.24.3 Negative-Sequence Current Stages

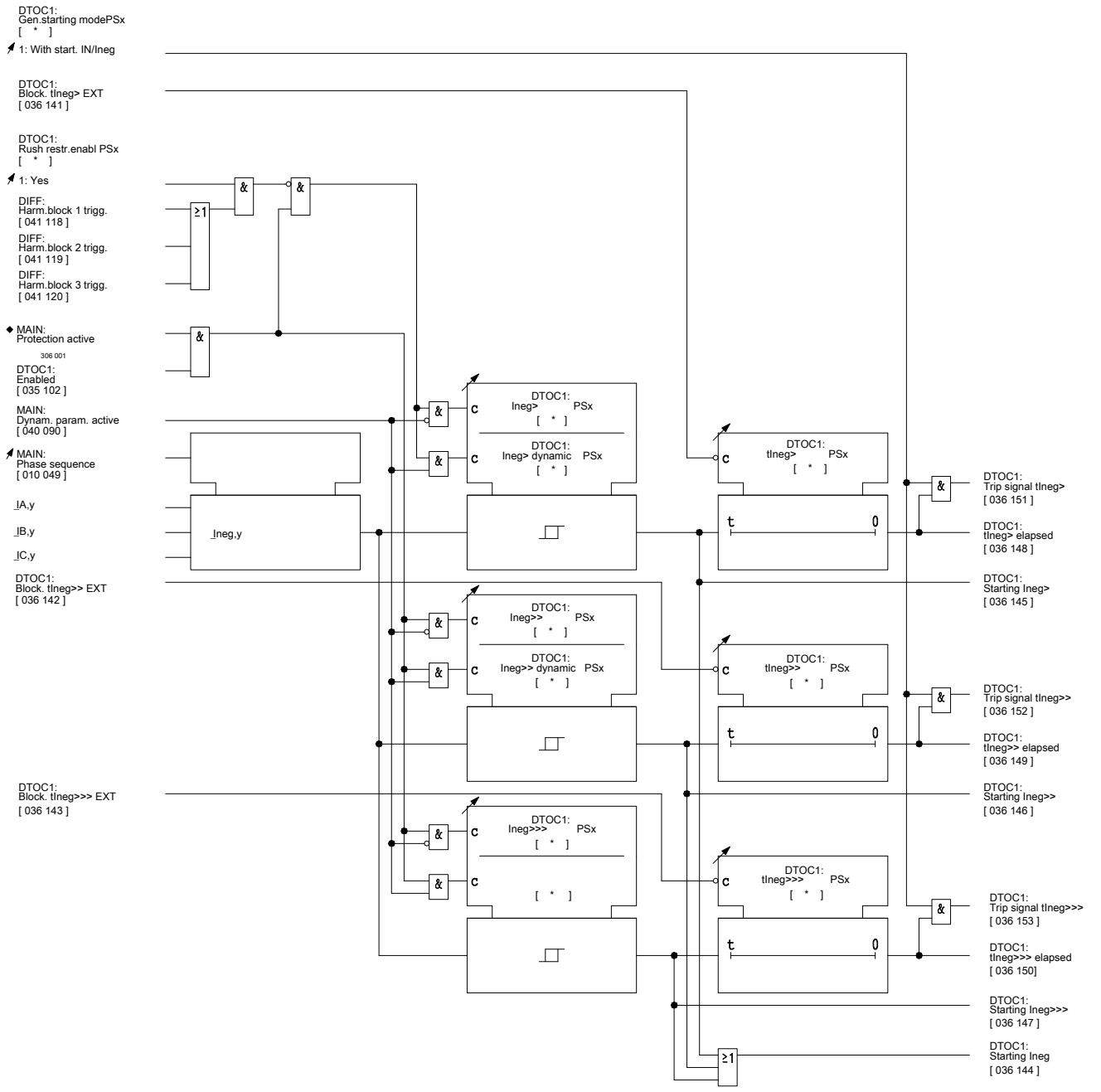

*

Parameter	DTOC1: Ineg> PSx	DTOC1: Ineg> dynamic PSx	DTOC1: Ineg>> PSx	DTOC1: Ineg>> dynamic PSx	DTOC1: Rush restr.enabl PSx
set 1	076 197	076 200	076 198	076 201	076 063
set 2	077 197	077 200	077 198	077 201	077 063
set 3	078 197	078 200	078 198	078 201	078 063
set 4	079 197	079 200	079 198	079 201	079 063

*

Parameter	DTOC1: Ineg>>> PSx	DTOC1: Ineg>>> dynamic PSx	DTOC1: tIneg> PSx	DTOC1: tIneg>> PSx	DTOC1: tIneg>>> PSx	DTOC1: Gen.starting modePSx
set 1	076 199	076 202	076 203	076 204	076 205	076 066
set 2	077 199	077 202	077 203	077 204	077 205	077 066
set 3	078 199	078 202	078 203	078 204	078 205	078 066
set 4	079 199	079 202	079 203	079 204	079 205	079 066

Fig. 3-122: Negative-sequence current stages

The P633 calculates the negative-sequence current from the three phase current values according to this equation. This is based on the setting at MAIN: Phase sequence.

Phase sequence A-B-C:

$$\underline{I}_{neg} = \frac{1}{3} \cdot \left| \left(\underline{I}_A + \underline{a}^2 \underline{I}_B + \underline{a} \underline{I}_C \right) \right|$$

Phase sequence A-C-B:

$$\underline{I}_{neg} = \frac{1}{3} \cdot \left| \left(\underline{I}_A + \underline{a} \underline{I}_B + \underline{a}^2 \underline{I}_C \right) \right|$$

$$\underline{a} = e^{j120°}$$

$$\underline{a}^2 = e^{j240°}$$

The negative-sequence current is monitored by the P633 with three-stage functions to detect when it exceeds the set thresholds. One of two different threshold types can be active. The “dynamic” thresholds are active for the set hold time for the “dynamic parameters” (see Section 3.13.8, (p. 3-102)) and the “normal” thresholds are active when no hold time is running. If the current exceeds the set thresholds in one phase, timer stages are started. Once the time delays have elapsed, a trip signal is issued. The timer stages can be blocked by appropriately configured binary signal inputs.

The first stage of the negative-sequence current protection function can optionally be blocked by the inrush stabilization function of differential protection.

3.24.4 Residual Current Stages

The residual current is monitored by the P633 with three-stage functions to detect when it exceeds the set thresholds. One of two different threshold types can be active. The “dynamic” thresholds are active for the set hold time for the “dynamic parameters” (see Section 3.13.8, (p. 3-102)) and the “normal” thresholds are active when no hold time is running.

If the residual current exceeds the set thresholds, timer stages are started. Once the time delays have elapsed, a signal is issued. If the operating mode of the general starting decision is set to *With start. IN/Ineg*, a trip signal is issued as well.

There is also a separate setting for each residual current stage whether the starting decision shall be based on the fundamental or on the r.m.s. value.

The timer stages can be blocked by appropriately configured binary signal inputs. In addition these timer stages can also be automatically blocked by single-pole or multipole starting (depending on the setting).

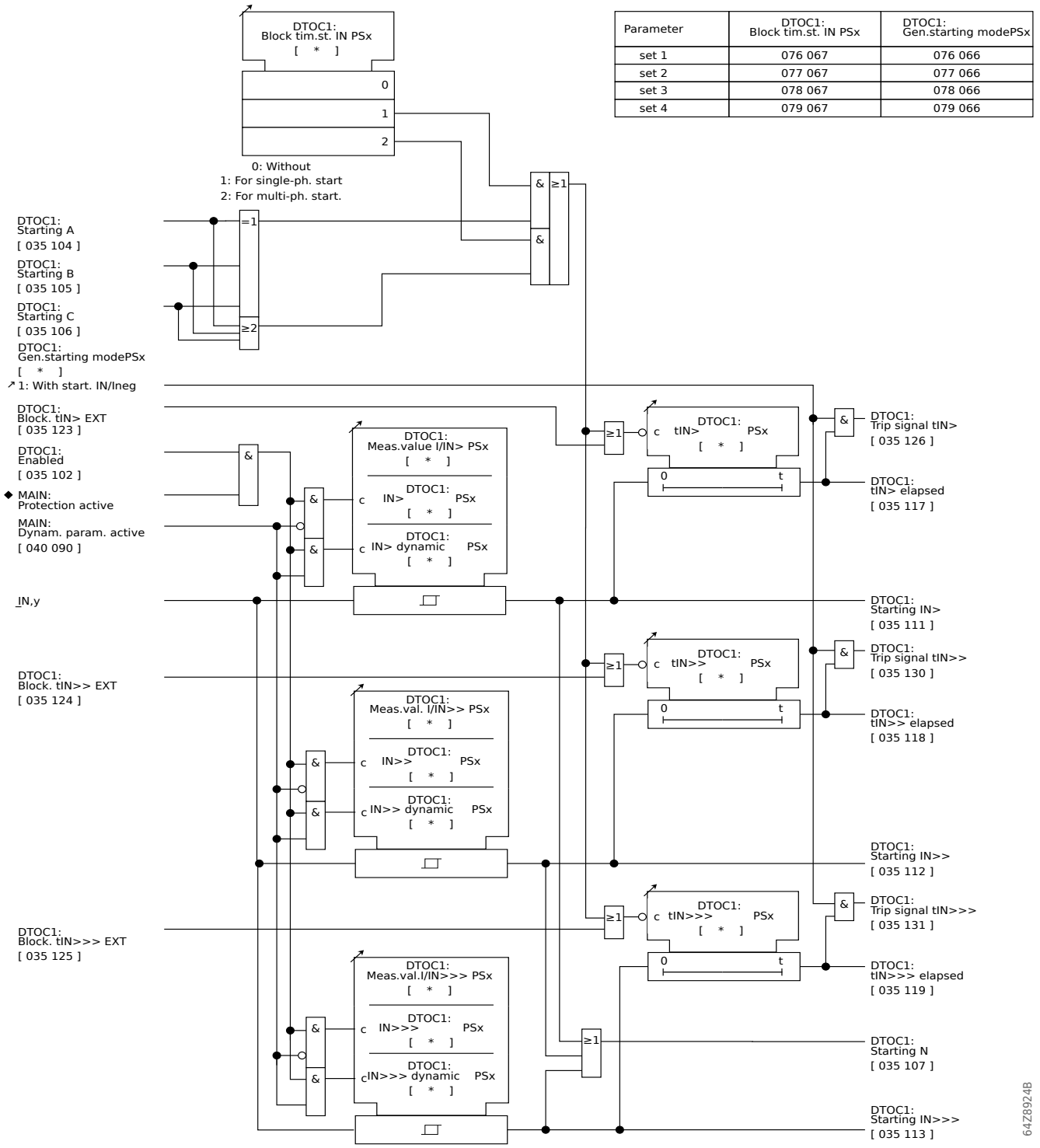

Parameter	DTOC1: Block tim.st. IN PSx	DTOC1: Gen.starting modePSx
set 1	076 067	076 066
set 2	077 067	077 066
set 3	078 067	078 066
set 4	079 067	079 066

Parameter	DTOC1: IN>>> PSx	DTOC1: IN>>> dynamic PSx	DTOC1: tIN> PSx	DTOC1: Meas.value I/IN> PSx	DTOC1: IN> PSx	DTOC1: IN> dynamic PSx
set 1	076 056	076 156	076 060	060 002	076 054	076 154
set 2	077 056	077 156	077 060	060 003	077 054	077 154
set 3	078 056	078 156	078 060	060 004	078 054	078 154
set 4	079 056	079 156	079 060	060 005	079 054	079 154

Parameter	DTOC1: tIN>> PSx	DTOC1: Meas.val. I/IN>> PSx	DTOC1: IN>> PSx	DTOC1: IN>> dynamic PSx	DTOC1: tIN>>> PSx	DTOC1: Meas.val.I/IN>>> PSx
set 1	076 061	060 006	076 055	076 155	076 062	060 010
set 2	077 061	060 007	077 055	077 155	077 062	060 011
set 3	078 061	060 008	078 055	078 155	078 062	060 012
set 4	079 061	060 009	079 055	079 155	079 062	060 013

Fig. 3-123: Residual current stages.

3.24.5 General Starting

If the current exceeds one of the set thresholds of the phase current stages, a general starting decision is issued. The user can select whether the starting of the negative-sequence and residual current stages should be taken into account in the general starting decision. The general starting triggers a timer stage. A signal is issued when the time delay of this stage has elapsed.

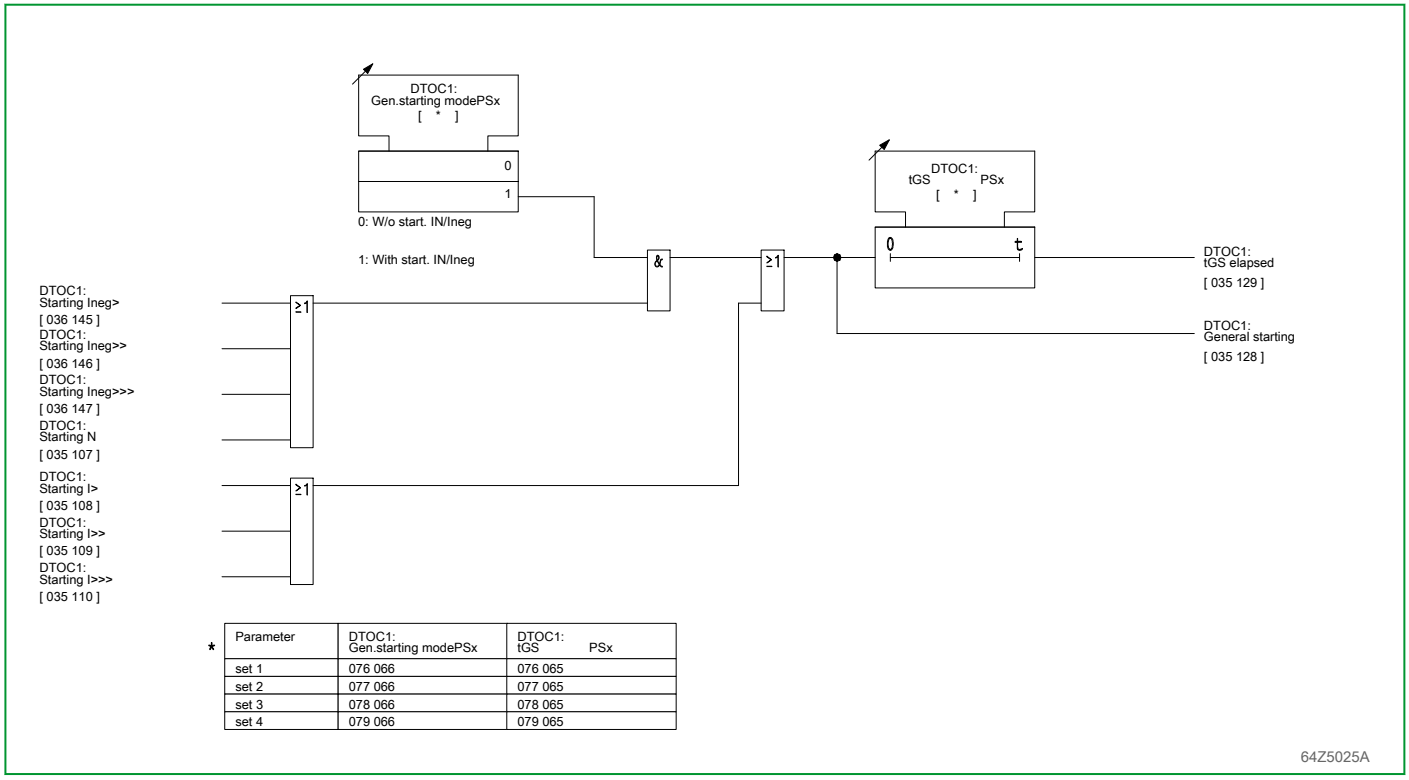

* Parameter	DTOC1: Gen.starting modePSx	DTOC1: tGS PSx
set 1	076 066	076 065
set 2	077 066	077 065
set 3	078 066	078 065
set 4	079 066	079 065

Fig. 3-124: General starting

3.24.6 Counters of the DTOC Protection Function

The number of general starts is counted. The counter can be reset individually.

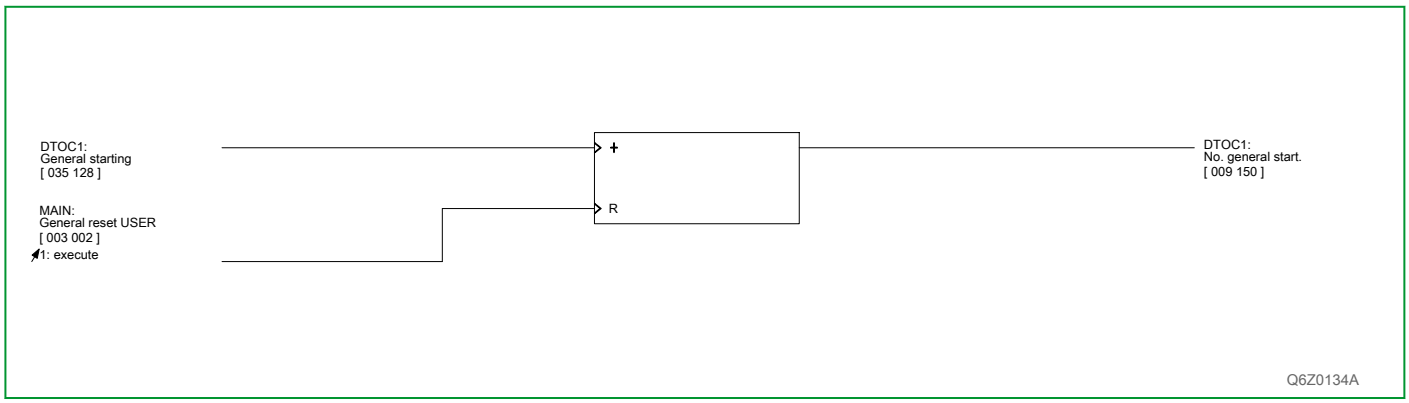

Fig. 3-125: Counters of the DTOC protection function

3.25 Inverse-time Overcurrent Protection (Function Groups IDMT1 to IDMT3)

The P633 features an inverse-time overcurrent protection function (IDMT protection) for up to three transformer ends. The measured variables to be monitored by the respective IDMT function are selected by a setting parameter.

These values can also be quantities formed by summation of current values from two user-selected transformer ends.

Phase current values as well as negative-sequence and residual current measured values are monitored.

The function group IDMT1 will serve as an example to illustrate the operation of the IDMT protection functions. The same will apply to function groups IDMT2 and IDMT3.

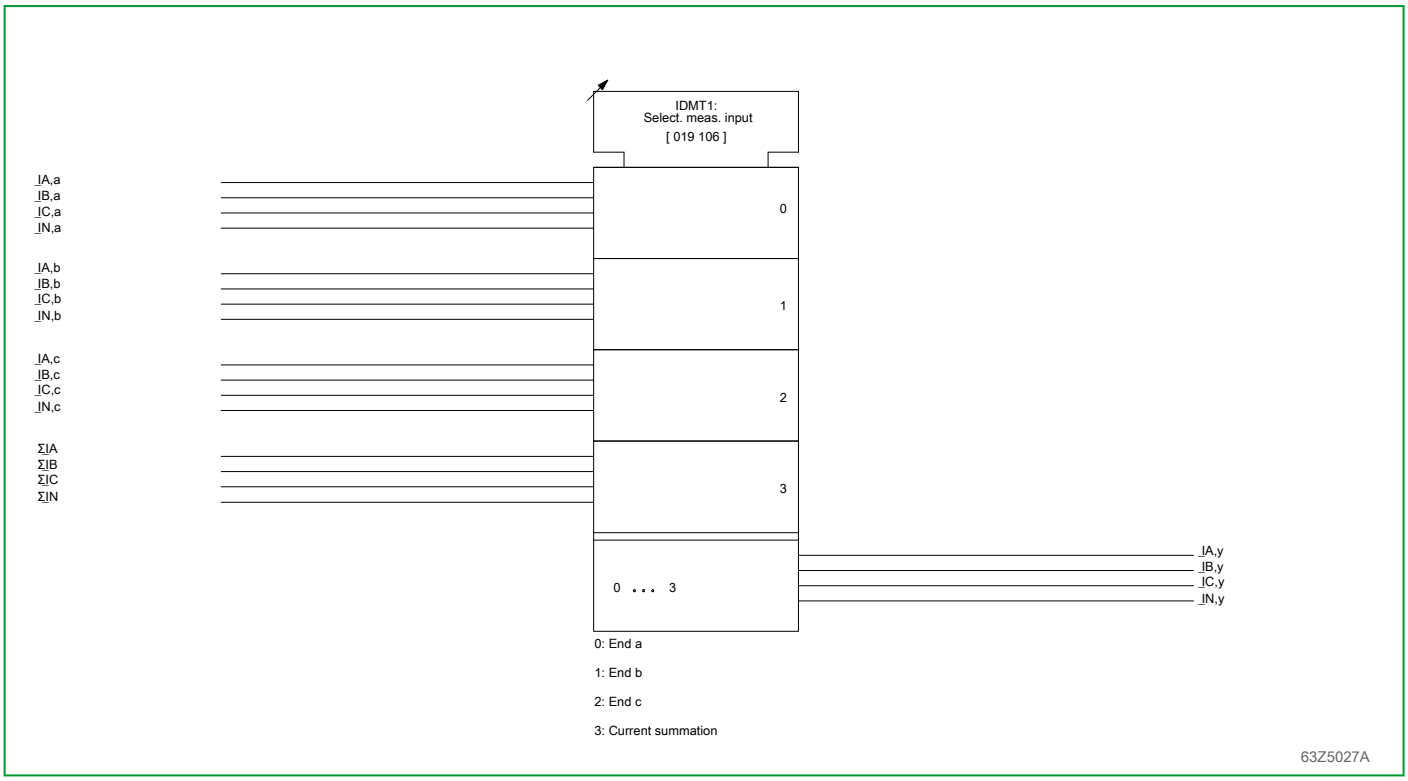

Fig. 3-126: Selection of measured variables for IDMT protection

3.25.1 Enabling or Disabling IDMT Protection

IDMT protection can be enabled or disabled via setting parameters. Moreover, enabling can be carried out separately for each parameter subset.

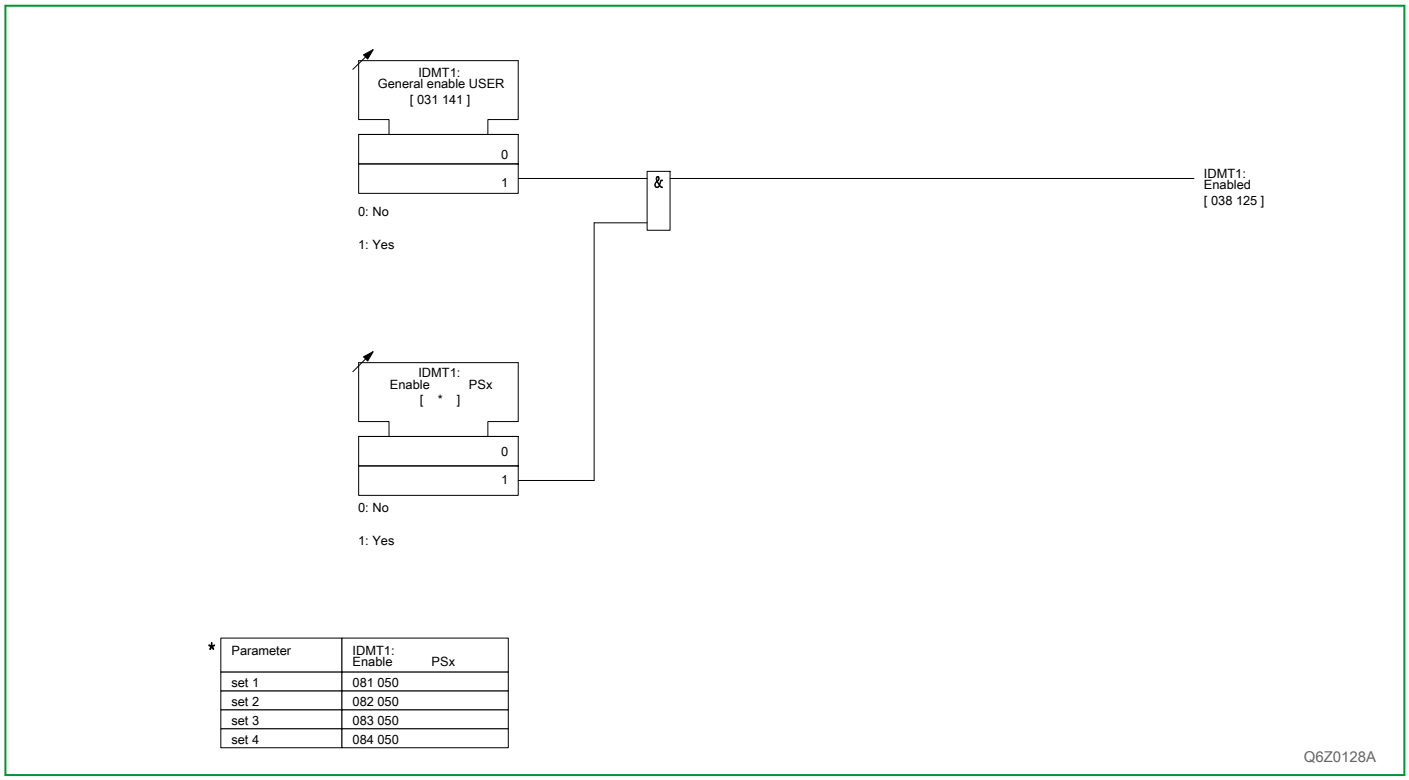

* Parameter	IDMT1: Enable PSx
set 1	081 050
set 2	082 050
set 3	083 050
set 4	084 050

Fig. 3-127: Enabling or disabling IDMT protection

3.25.2 Time-Dependent Characteristics

The measuring systems for phase currents, residual current and negative-sequence current operate independently of each other and can be set separately. The user can select from a large number of characteristics (see table below). The measured variable is the maximum phase current, the negative-sequence current, or the residual current, depending on the measuring system. The tripping characteristics available for selection are shown in the following figures (Fig. 3-128, (p. 3-179) to Fig. 3-131, (p. 3-181)).

No.	Tripping Characteristic Characteristic settable factor: k = 0.05 ... 10.00	Formula for the Tripping Characteristic	Constants a	b	c	Formula for the Reset Characteristic	R
0	Definite Time	$t = k$					
	Per IEC 255–3	$t = k \cdot \frac{a}{(\frac{I}{I_{ref}})^b - 1}$					
1	Standard Inverse		0.14	0.02			
2	Very Inverse		13.50	1.00			
3	Extremely Inverse		80.00	2.00			
4	Long Time Inverse		120.00	1.00			
	Per IEEE C37.112	$t = k \cdot (\frac{a}{(\frac{I}{I_{ref}})^b - 1} + c)$				$t_r = \frac{k \cdot R}{1 - (\frac{I}{I_{ref}})^2}$	
5	Moderately Inverse		0.0515	0.0200	0.1140		4.85
6	Very Inverse		19.6100	2.0000	0.4910		21.60
7	Extremely Inverse		28.2000	2.0000	0.1217		29.10
	Per ANSI	$t = k \cdot (\frac{a}{(\frac{I}{I_{ref}})^b - 1} + c)$				$t_r = \frac{k \cdot R}{1 - (\frac{I}{I_{ref}})^2}$	
8	Normally Inverse		8.9341	2.0938	0.17966		9.00
9	Short Time Inverse		0.2663	1.2969	0.03393		0.50
10	Long Time Inverse		5.6143	1.0000	2.18592		15.75
11	RI-Type Inverse	$t = k \cdot \frac{1}{0.339 - \frac{0.236}{(\frac{I}{I_{ref}})}}$					
12	RXIDG-Type Inverse	$t = k \cdot (5.8 - 1.35 \cdot \ln \frac{I}{I_{ref}})$					

Once a ratio I/I_{ref} greater than 20 is reached, the tripping time is bounded on the lower end.

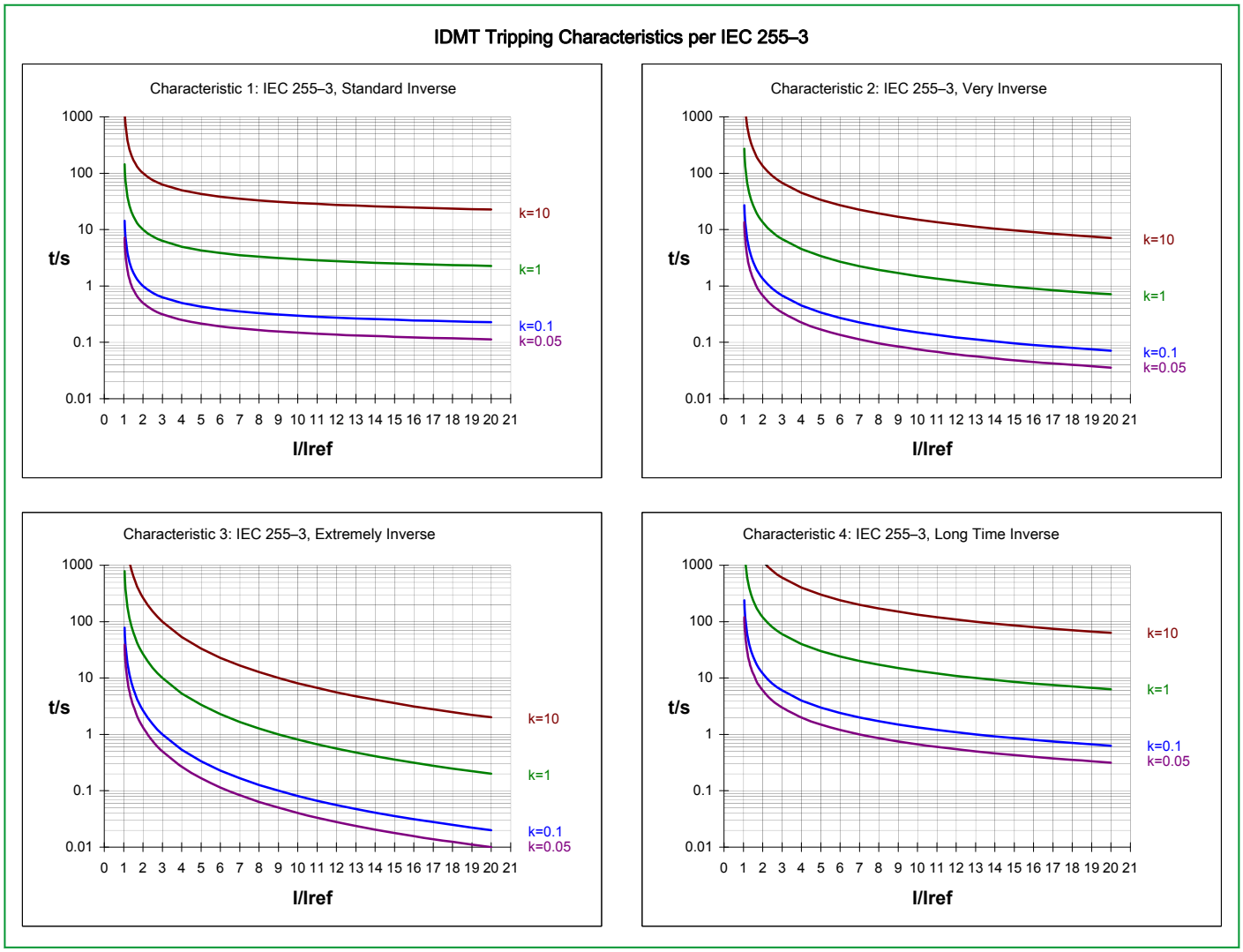

Fig. 3-128: Tripping characteristics as per IEC 255-3.

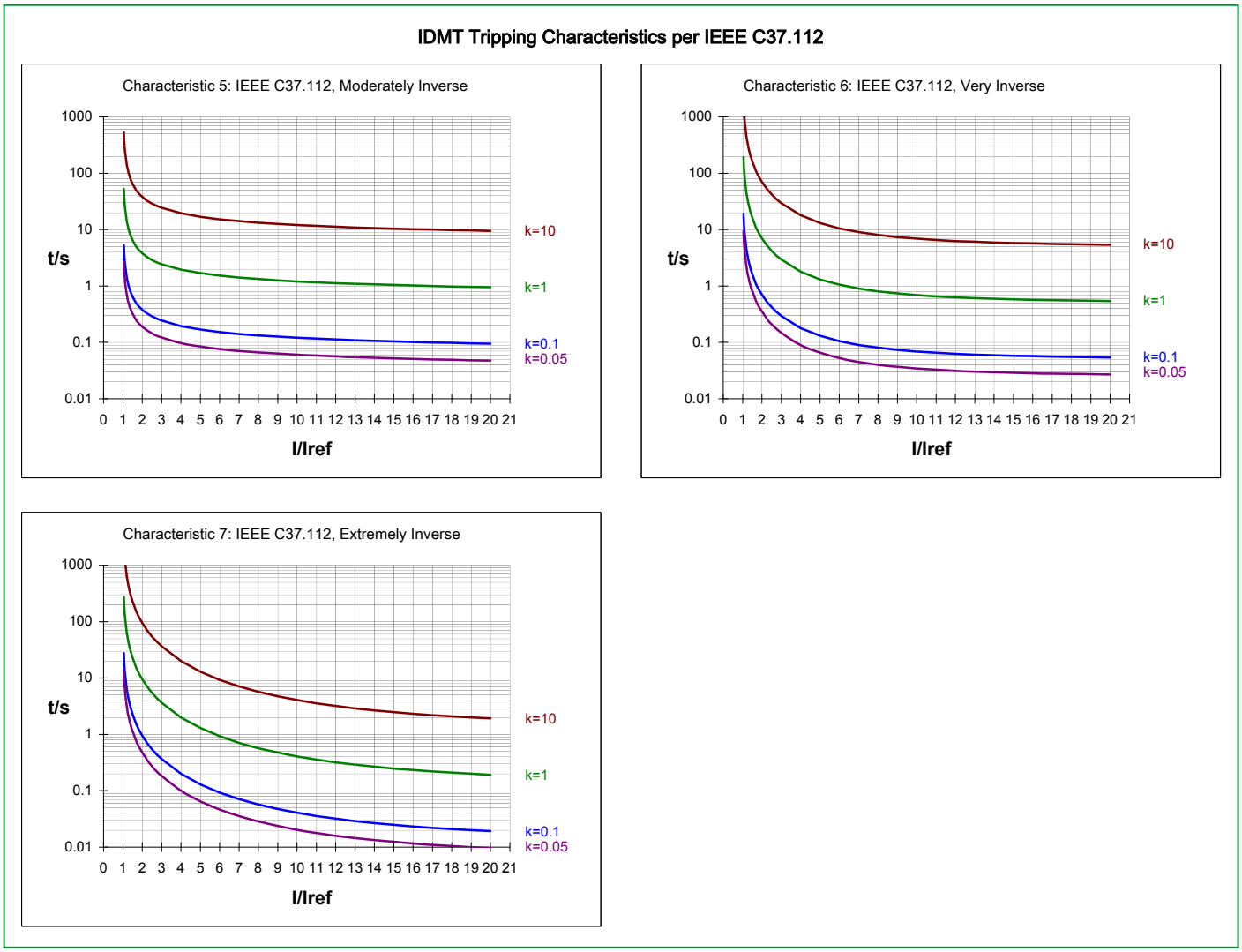

Fig. 3-129: Tripping characteristics as per IEEE C37.112.

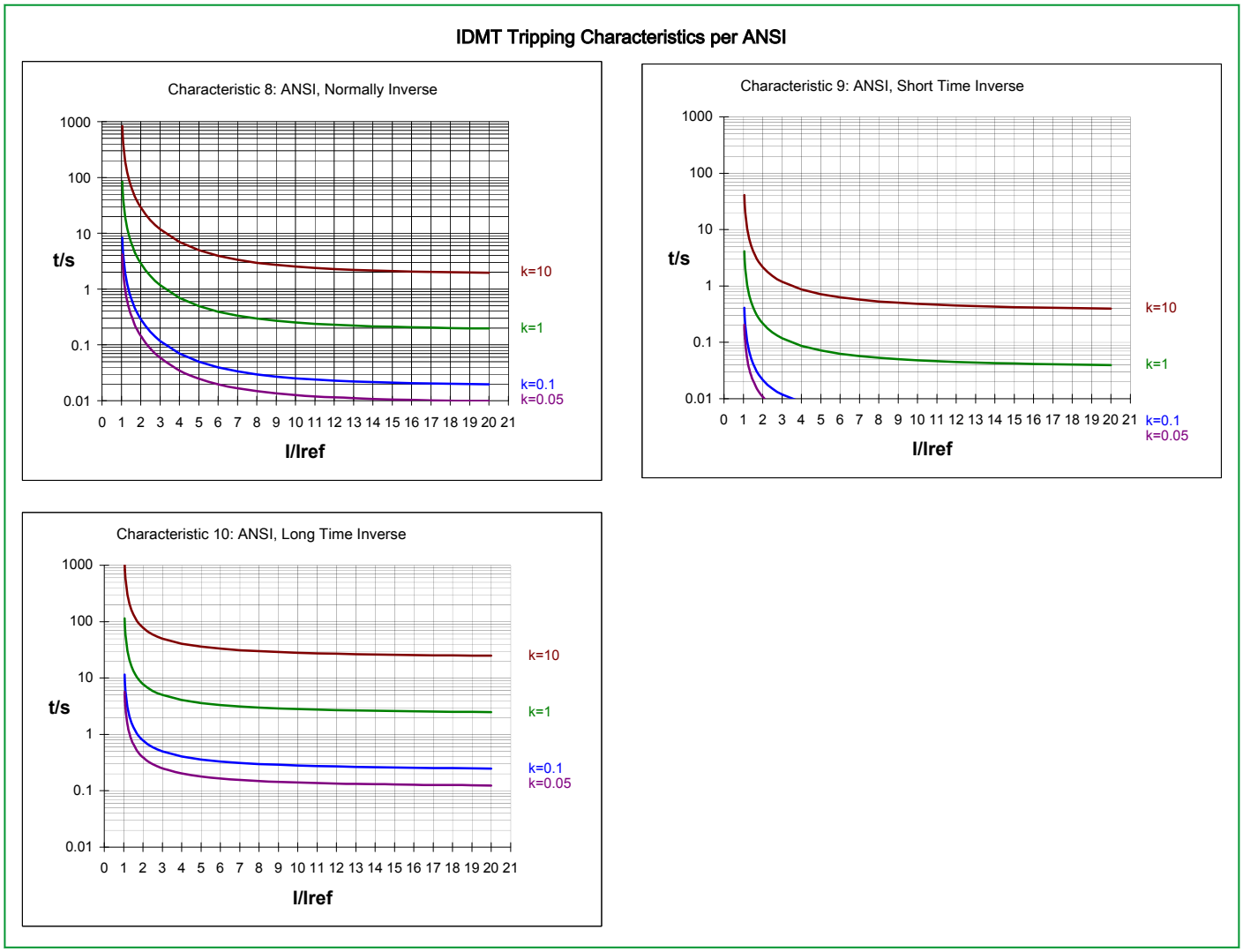

Fig. 3-130: Tripping characteristics as per ANSI.

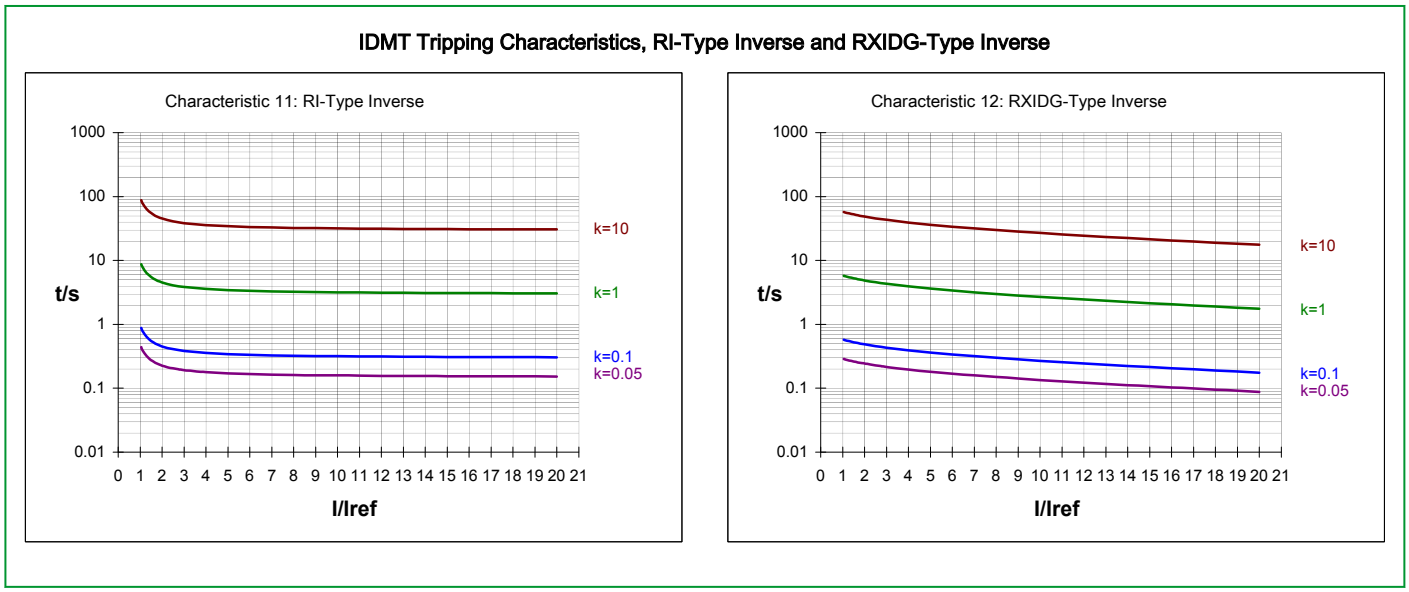

Fig. 3-131: RI-type inverse and RXIDG-type inverse tripping characteristics.

3.25.3 Phase Current Stage

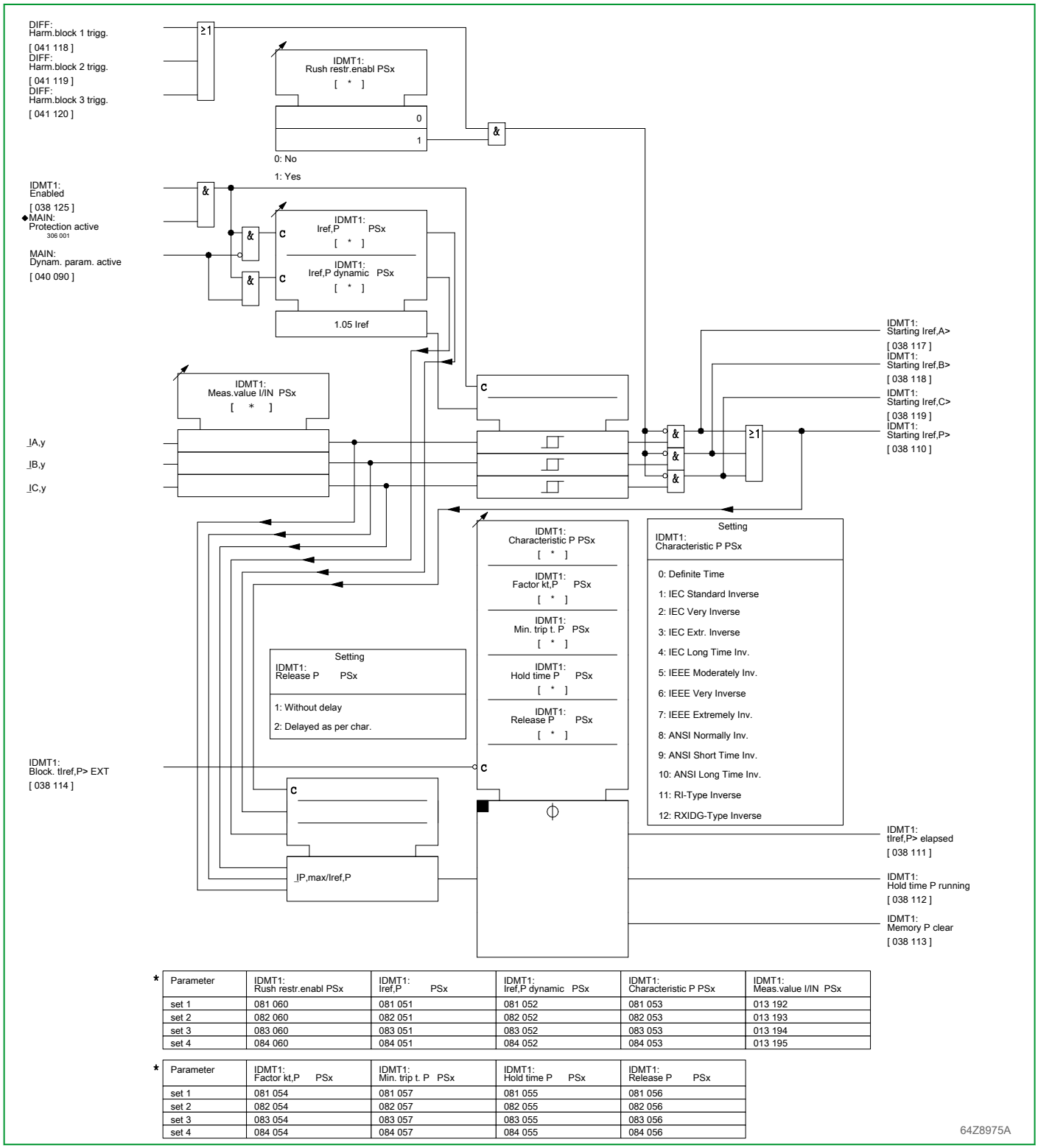

* Parameter	IDMT1: Rush restr.enabl PSx	IDMT1: Iref,P PSx	IDMT1: Iref,P dynamic PSx	IDMT1: Characteristic P PSx	IDMT1: Meas.value I/IN PSx
set 1	081 060	081 051	081 052	081 053	013 192
set 2	082 060	082 051	082 052	082 053	013 193
set 3	083 060	083 051	083 052	083 053	013 194
set 4	084 060	084 051	084 052	084 053	013 195

* Parameter	IDMT1: Factor kt,P PSx	IDMT1: Min. trip t. P PSx	IDMT1: Hold time P PSx	IDMT1: Release P PSx
set 1	081 054	081 057	081 055	081 056
set 2	082 054	082 057	082 055	082 056
set 3	083 054	083 057	083 055	083 056
set 4	084 054	084 057	084 055	084 056

Fig. 3-132: Phase current stage.

The three phase currents are monitored by the P633 to detect when they exceed the set thresholds. Alternatively, two different thresholds can be active. The “dynamic” threshold is active for the set hold time of the “dynamic parameters” (see Section 3.13.8, (p. 3-102)); the “normal” threshold is active when no hold time is running.

It is also possible to select whether the starting decision shall be based on the fundamental or on the r.m.s. value.

The IDMT protection function will be triggered when the 1.05-fold of the set reference current value is exceeded in one phase. The P633 will then determine the maximum current flowing in the three phases and this value is used for further processing.

Depending on the characteristic selected and the current magnitude, the P633 will determine the tripping time. Furthermore, a minimum tripping time can be set; the tripping time will not fall below this minimum independently of the magnitude of the current.

The IDMT protection function can optionally be blocked by the inrush stabilization function of differential protection.

3.25.4 Negative-Sequence Current Stage

The P633 calculates the negative-sequence current from the three phase current values according to this equation. This is based on the setting at MAIN: Phase sequence.

Phase sequence A-B-C:

$$\underline{I}_{neg} = \frac{1}{3} \cdot \left| \left(\underline{I}_A + \underline{a}^2 \underline{I}_B + \underline{a} \underline{I}_C \right) \right|$$

Phase sequence A-C-B:

$$\underline{I}_{neg} = \frac{1}{3} \cdot \left| \left(\underline{I}_A + \underline{a} \underline{I}_B + \underline{a}^2 \underline{I}_C \right) \right|$$

$$\underline{a} = e^{j120°}$$

$$\underline{a}^2 = e^{j240°}$$

The negative-sequence current is monitored by the P633 to detect when it exceeds the set thresholds. Alternatively, two different thresholds can be active. The “dynamic” thresholds are active for the set hold time for the “dynamic parameters” (see Section 3.13.8, (p. 3-102)) and the “normal” thresholds are active when no hold time is running. The IDMT protection will trigger when the 1.05-fold of the set reference current value is exceeded. Dependent on the characteristic selected and the negative-sequence current magnitude the P633 will determine the tripping time. Furthermore, a minimum tripping time can be set; the tripping time will not fall below this minimum independent of the magnitude of the current.

The negative-sequence current stage of the IDMT protection function can optionally be blocked by the inrush stabilization function of differential protection.

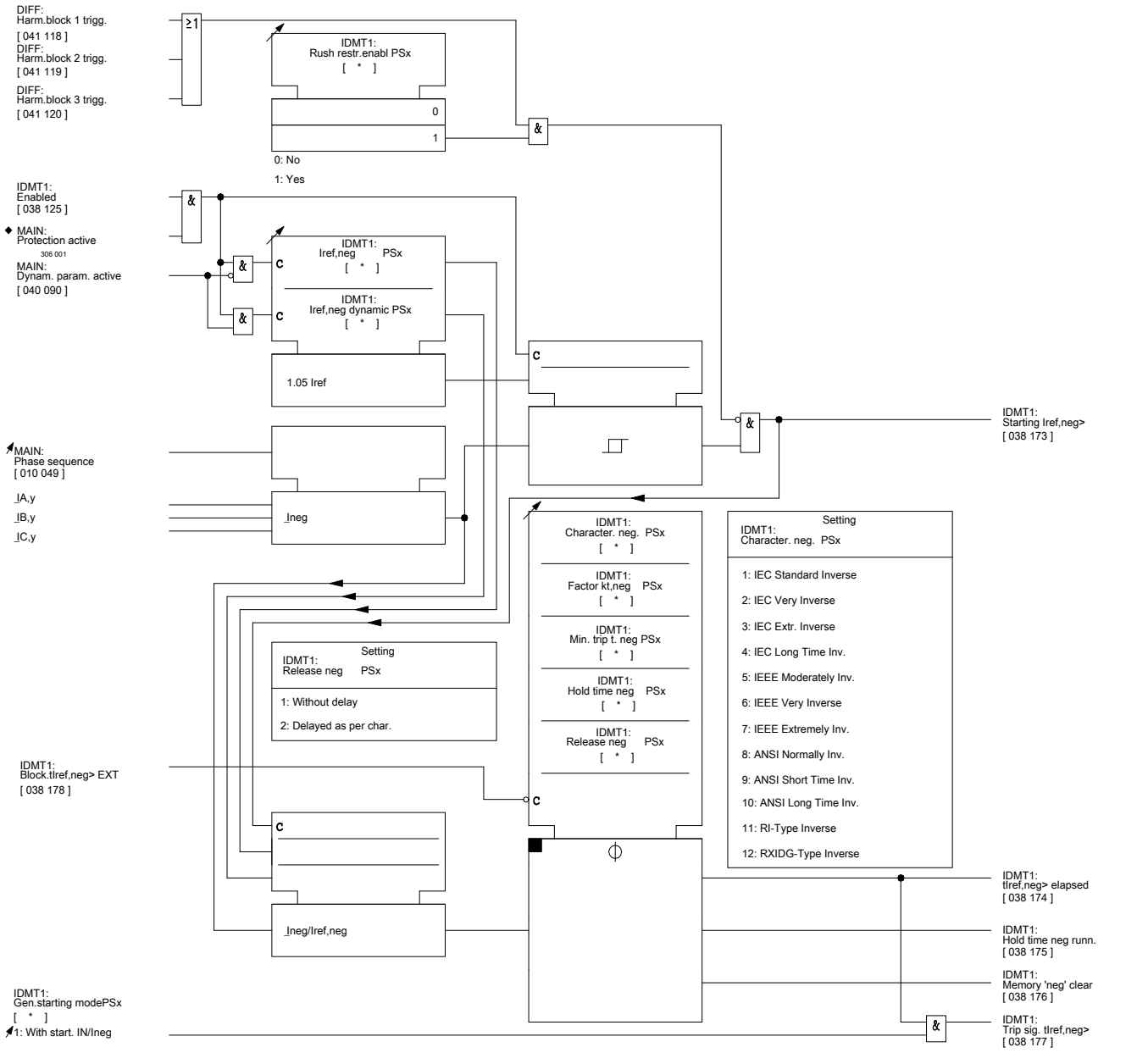

*

Parameter	IDMT1: Rush restr.enabl PSx	IDMT1: Iref,neg PSx	IDMT1: Iref,neg dynamic PSx	IDMT1: Character. neg. PSx
set 1	081 060	081 111	081 112	081 113
set 2	082 060	082 111	082 112	082 113
set 3	083 060	083 111	083 112	083 113
set 4	084 060	084 111	084 112	084 113

*

Parameter	IDMT1: Factor kt,neg PSx	IDMT1: Min. trip t. neg PSx	IDMT1: Hold time neg PSx	IDMT1: Release neg PSx	IDMT1: Gen.starting modePSx
set 1	081 114	081 117	081 115	081 116	081 059
set 2	082 114	082 117	082 115	082 116	082 059
set 3	083 114	083 117	083 115	083 116	083 059
set 4	084 114	084 117	084 115	084 116	084 059

Fig. 3-133: Negative-sequence current stage

3.25.5 Residual Current Stage

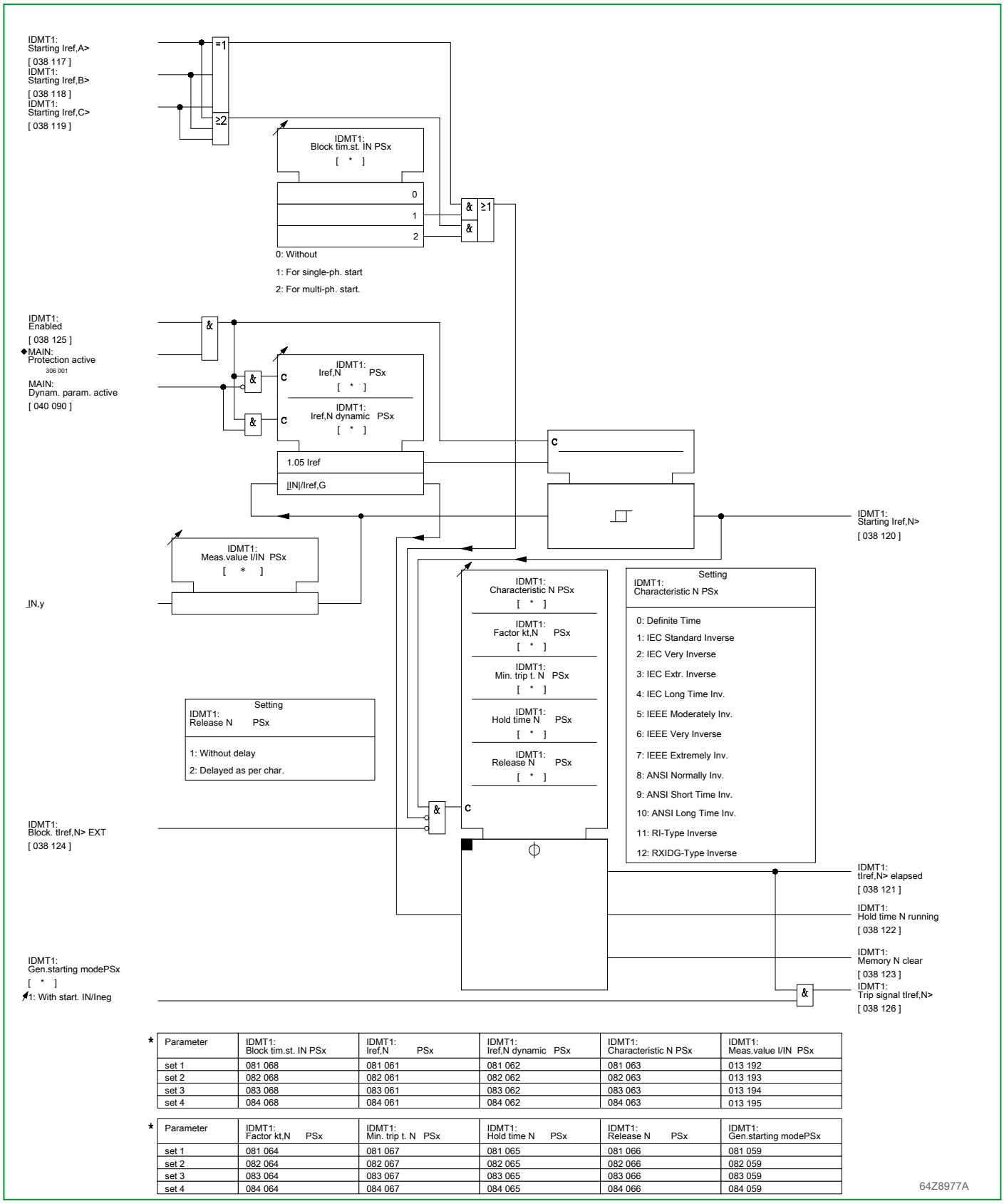

* Parameter	IDMT1: Block tim.st. IN PSx	IDMT1: Iref,N PSx	IDMT1: Iref,N dynamic PSx	IDMT1: Characteristic N PSx	IDMT1: Meas.value I/IN PSx
set 1	081 068	081 061	081 062	081 063	013 192
set 2	082 068	082 061	082 062	082 063	013 193
set 3	083 068	083 061	083 062	083 063	013 194
set 4	084 068	084 061	084 062	084 063	013 195

* Parameter	IDMT1: Factor kt,N PSx	IDMT1: Min. trip t. N PSx	IDMT1: Hold time N PSx	IDMT1: Release N PSx	IDMT1: Gen.starting modePSx
set 1	081 064	081 067	081 065	081 066	081 059
set 2	082 064	082 067	082 065	082 066	082 059
set 3	083 064	083 067	083 065	083 066	083 059
set 4	084 064	084 067	084 065	084 066	084 059

Fig. 3-134: Residual current stage.

The residual current is monitored by the P633 to detect when it exceeds the set thresholds. Alternatively, two different thresholds can be active. The “dynamic”

threshold is active for the set hold time for the “dynamic parameters” (see Section 3.13.8, (p. 3-102)) and the “normal” threshold is active when no hold time is running.

It is also possible to select whether the starting decision shall be based on the fundamental or on the r.m.s. value.

The IDMT protection will trigger when the 1.05-fold of the set reference current value is exceeded by the residual current. Dependent on the characteristic selected and the residual current magnitude the P633 will determine the tripping time. Moreover the tripping time will under no circumstances fall below a settable minimum time threshold irrespective of the residual current flow magnitude.

The inverse-time stage can be blocked by an appropriately configured binary signal input. In addition the inverse-time stage can also be automatically blocked by singlepole or multi-pole starting (depending on the setting).

3.25.6 Hold Time

The setting of the hold time defines the time period during which the IDMT protection starting time is stored after the starting has dropped out. Should starting recur during the hold time period then the time of the renewed starting will be added to the time period stored. When the starting times sum reach the tripping time value determined by the P633 then the corresponding signal will be issued. Should starting not recur during the hold time period then, depending on the setting, the memory storing the accumulated starting times value will either be cleared without delay or according to the characteristic set. In Fig. 3-135, (p. 3-187), the effect of the hold time is shown by the example of a phase current stage.

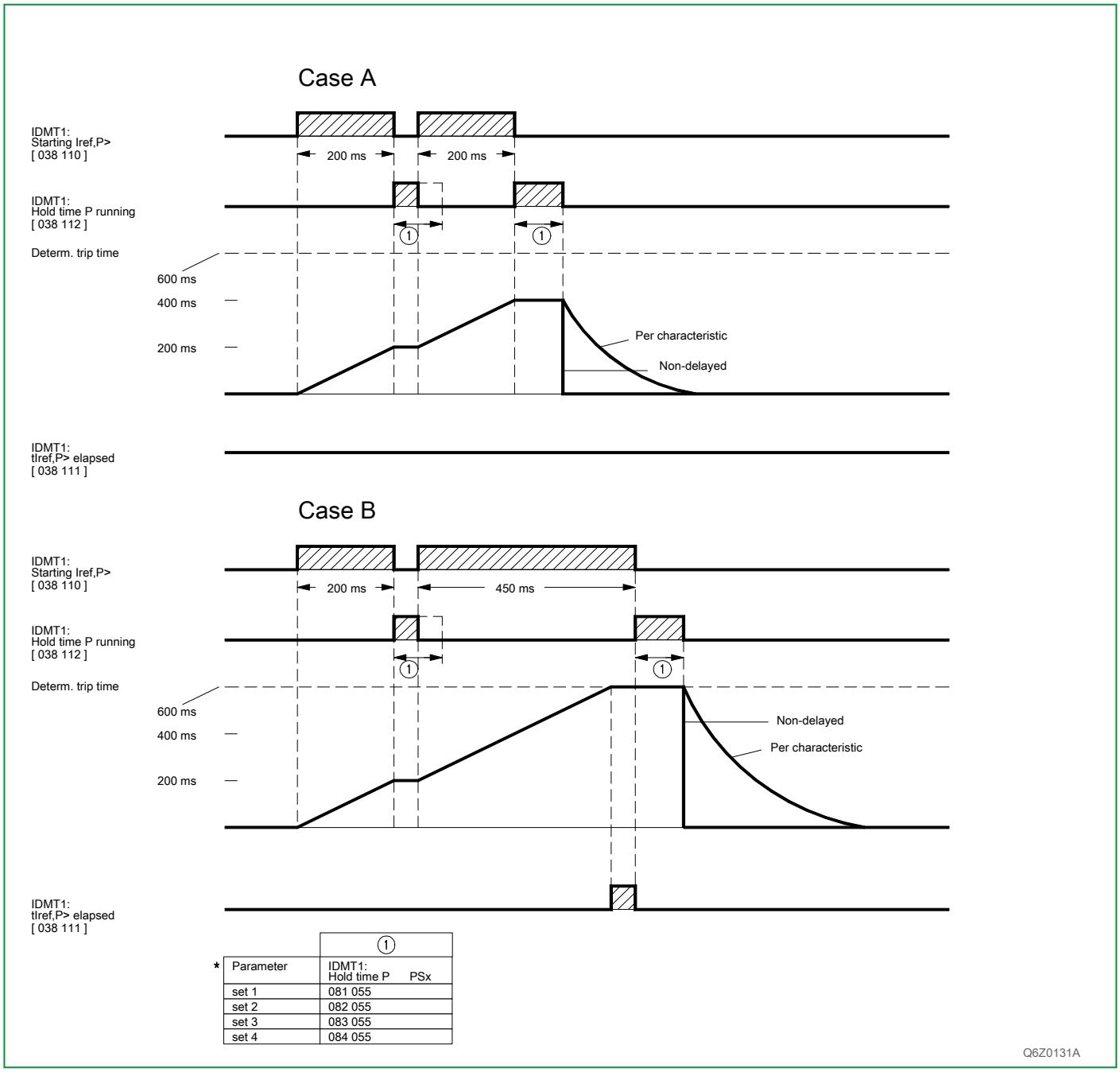

* Parameter	1 IDMT1: Hold time P PSx
set 1	081 055
set 2	082 055
set 3	083 055
set 4	084 055

Fig. 3-135: The effect of the hold time illustrated for the phase current stage as an example

Case A: The determined tripping time is not reached.

Case B: The determined tripping time is reached.

3.25.7 General Starting

A general starting is triggered if the current in one phase exceeds the 1.05-fold of the set reference current value. It can be selected whether the starting of the negativesequence and residual current stages should be taken into account in the general starting decision. The general starting triggers a timer stage. A signal is issued when the time period of this stage has elapsed.

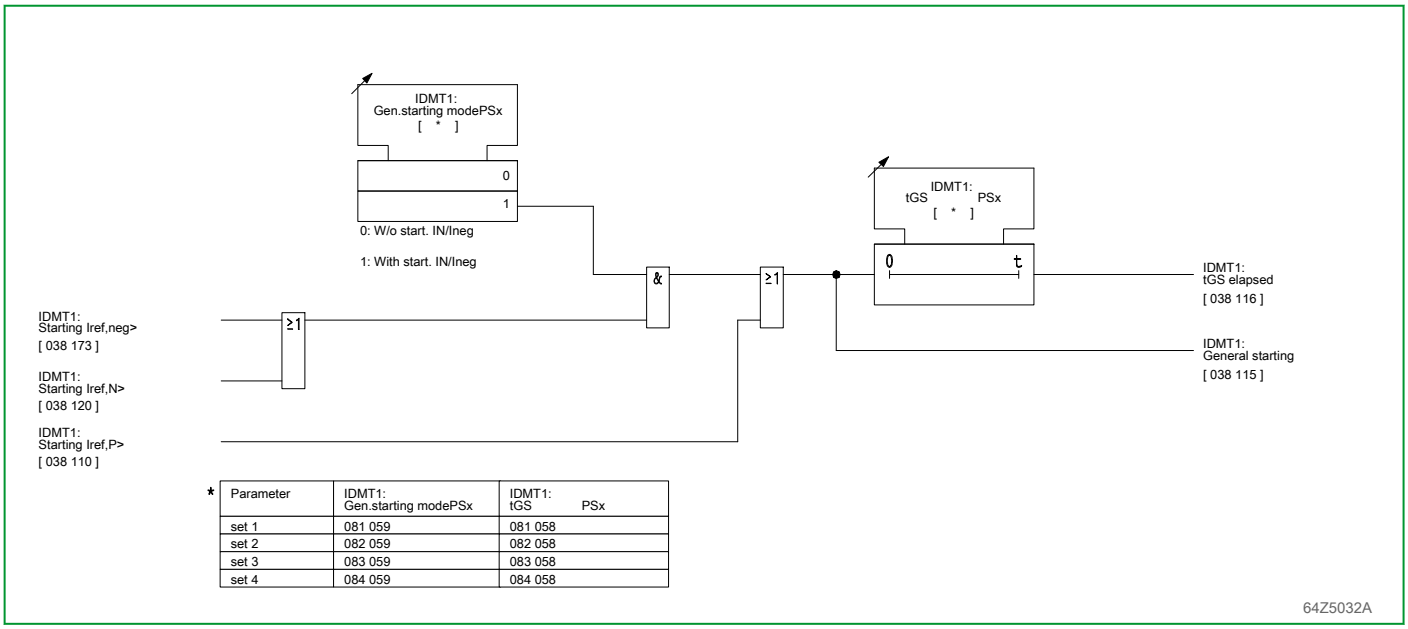

* Parameter	IDMT1: Gen.starting modePSx	IDMT1: tGS PSx
set 1	081 059	081 058
set 2	082 059	082 058
set 3	083 059	083 058
set 4	084 059	084 058

Fig. 3-136: General starting

3.25.8 Counters of the IDMT Protection Function

The number of general starts is counted. The counter can be reset individually.

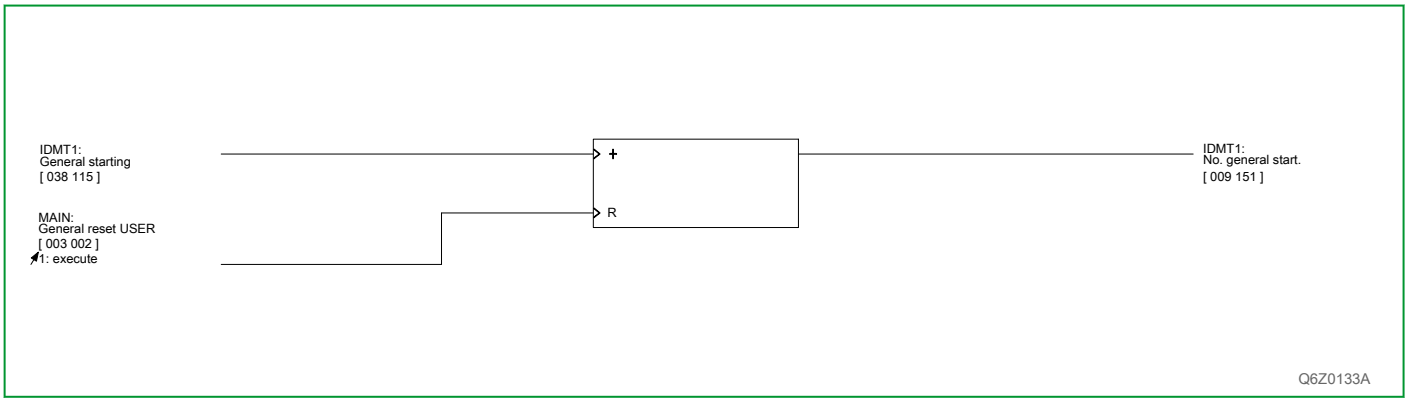

Fig. 3-137: Counters of the IDMT protection function

3.26 Thermal Overload Protection (Function Groups THRM1 and THRM2)

The thermal overload protection function has been designed for overload protection of transformers.

Function group THRM1 will serve as an example to illustrate the operation of the thermal overload protection functions. Accordingly, the same is valid for function group THRM2. The measured values to be monitored by the respective thermal overload protection functions are selected using a setting parameter. These can also be quantities formed by summation of the current values from two user-selected transformer ends.

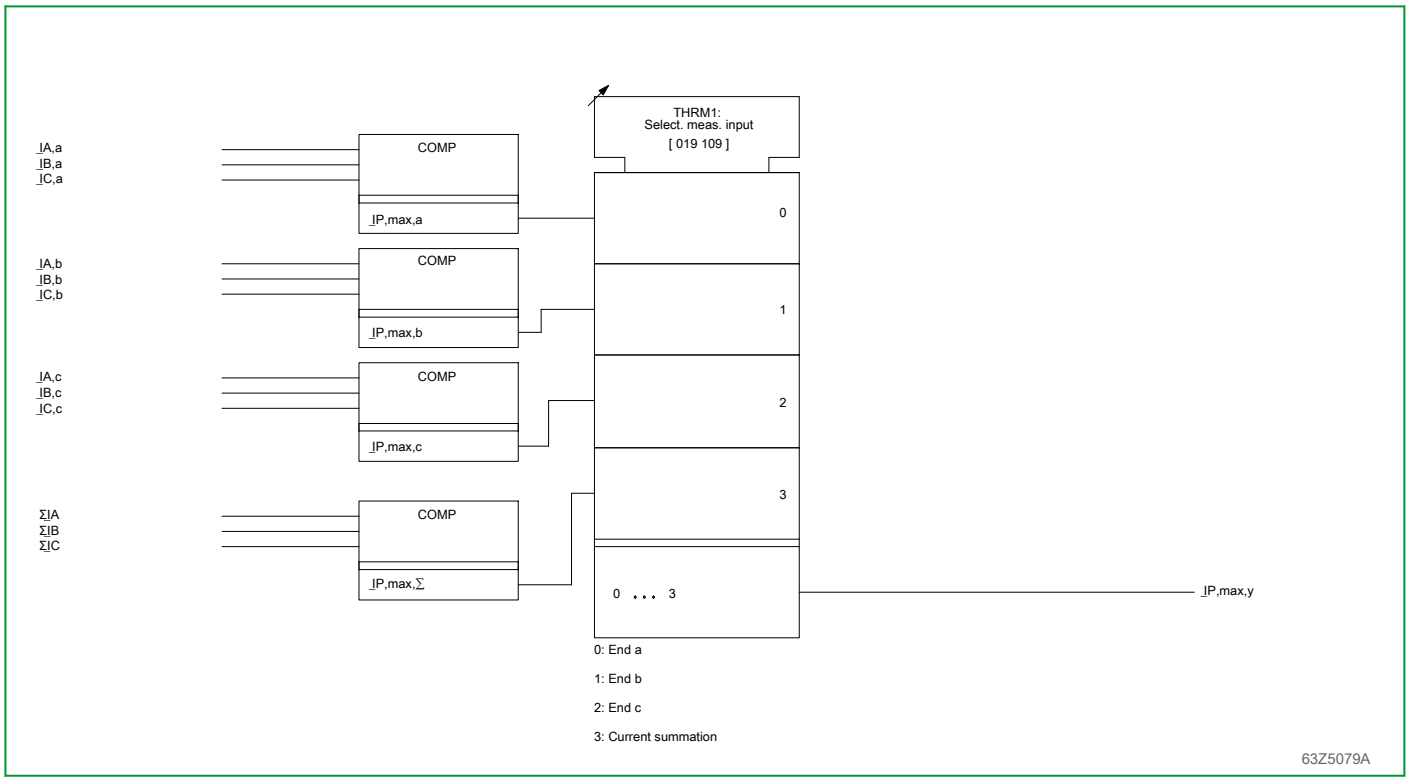

Fig. 3-138: Selection of measured values for thermal overload protection

3.26.1 Enabling or Disabling Thermal Overload Protection

Thermal overload protection may be enabled or disabled using setting parameters. Moreover, enabling can be carried out separately for each parameter subset.

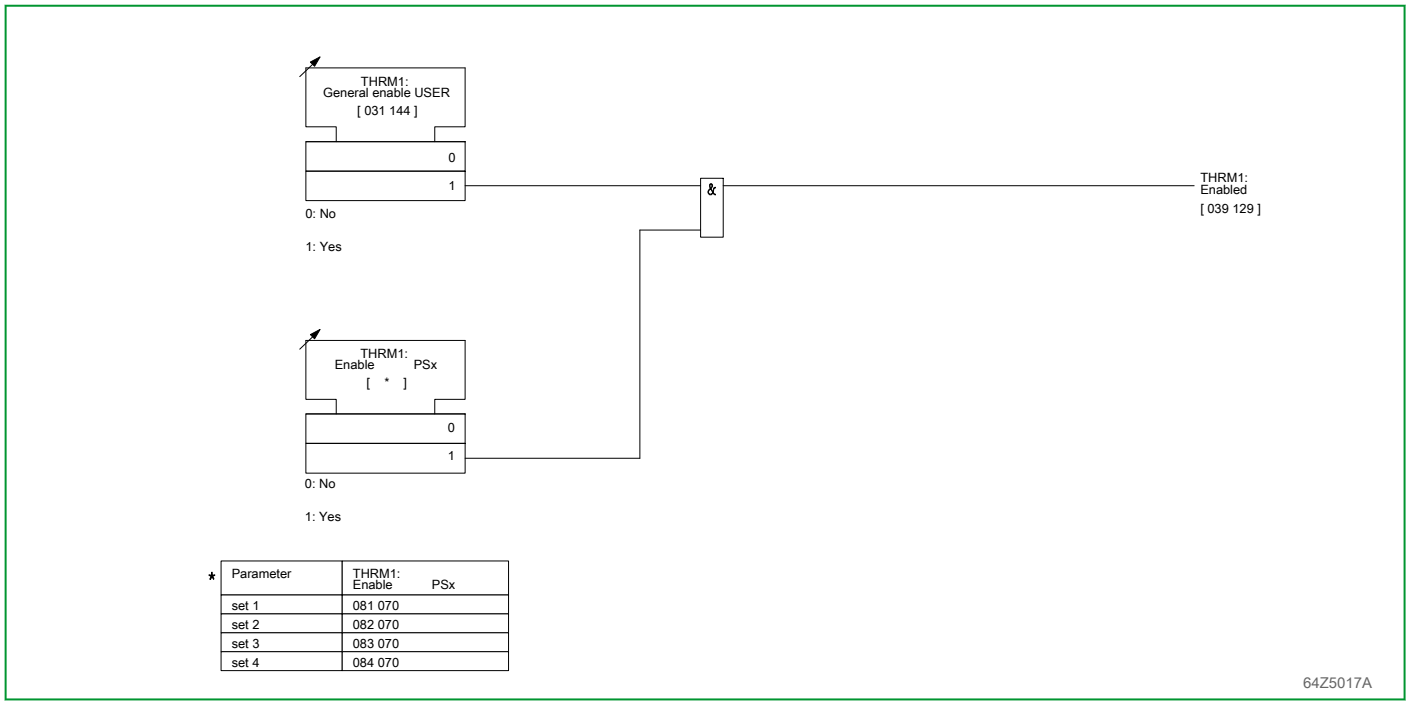

* Parameter	THRM1: Enable PSx
set 1	081 070
set 2	082 070
set 3	083 070
set 4	084 070

Fig. 3-139: Enabling or disabling thermal overload protection

3.26.2 Readiness of Thermal Overload Protection

Thermal overload protection will issue the THRM1: Not ready signal if one of the following conditions applies:

- Thermal overload protection is disabled.
- Thermal overload protection is blocked because of a fault in the coolant temperature (ambient) acquisition.
- Thermal overload protection is blocked because of an incorrect setting.
- The thermal replica is blocked via an appropriately configured binary signal input.

Fig. 3-140: THRM1: Not ready

3.26.3 Selection of Current

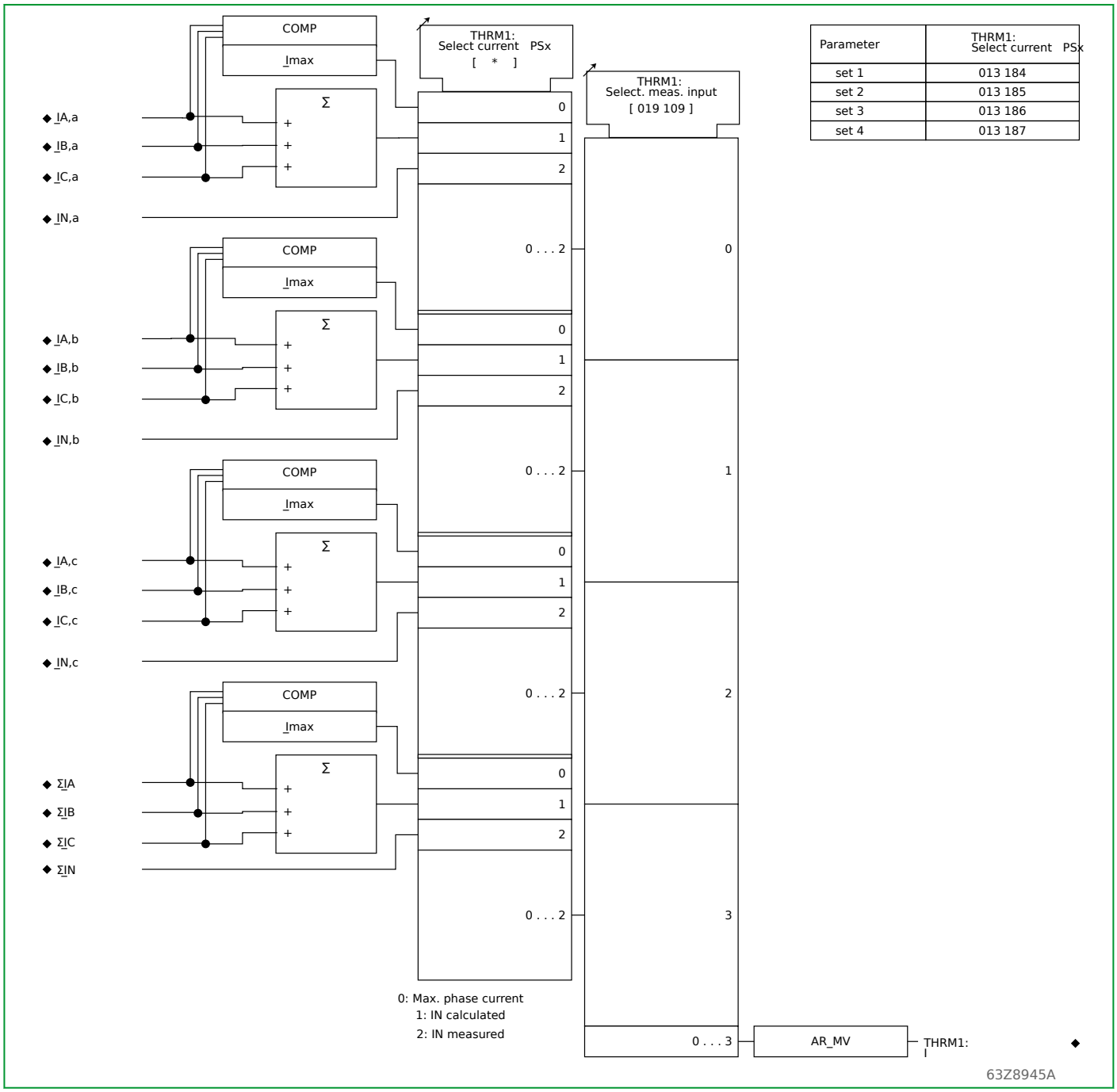

Parameter	THRM1: Select current PSx
set 1	013 184
set 2	013 185
set 3	013 186
set 4	013 187

Fig. 3-141: Selection of measured values for thermal overload protection.

The measured values to be monitored by the respective thermal overload protection functions are selected using several independent setting parameters: THRM1: Select. meas. input selects either a particular transformer end or the summation of the current values from two user-selected transformer ends. (In the latter case, MAIN: Current summation decides about which transformer ends are included in the summation, see Section 3.13.5, (p. 3-87).)

Then the setting THRM1: Select current PSx specifies whether the maximum RMS phase current (of the selected transformer end) shall be used, or the residual current calculated from the three phase currents (of the selected transformer end), or the residual current directly measured at the respective current transformer.

3.26.4 Tripping Characteristics

The selected current (THRM1: I, see Section 3.26.3, (p. 3-191)) of the selected transformer end is used to track a first-order thermal replica according to IEC 255-8. The following parameters will govern the tripping parameters:

- The set thermal time constant (τ) of the protected object THRM1: Tim.const.1,>Ibl PSx
- The tripping threshold $\Delta\vartheta_{trip}$ set at THRM1: Rel. O/T trip PSx
- The accumulated thermal load $\Delta\vartheta_0$
- The updated measured coolant temperature Θ_c for the protected object
- The maximum permissible coolant temperature $\Theta_{c,max}$ set at THRM1: Max.perm.cool.tmpPSx
- The maximum permissible object temperature Θ_{max} set at THRM1: Max.perm.obj.tmp.PSx
- If the value of the selected current (THRM1: I) is greater than $10 \cdot I_{ref}$ then only the fixed maximum value $10 \cdot I_{ref}$ is used for calculating the tripping time.

The object temperature is calculated from the selected current (THRM1: I) and can be displayed at THRM1: Object temperat.,TH1. The coolant temperature is either measured via the PT 100 input or via a 20 mA input, or a default temperature value is used instead. This choice is governed by the setting at THRM1: Select CTA PSx. The coolant temperature is displayed at THRM1: Coolant temp. TH1. The difference between the settings for the maximum permissible temperatures of the protected object and the coolant can be displayed at THRM1: O/T f.Iref persist 1.

The tripping characteristics are then defined by the equation:

$$t = \tau \cdot \ln \frac{\left(\frac{I}{I_{ref}}\right)^2 - \Delta\vartheta_0}{\left(\frac{I}{I_{ref}}\right)^2 - \Delta\vartheta_{trip} \cdot \left(1 - \frac{\Theta_c - \Theta_{c,\max}}{\Theta_{\max} - \Theta_{c,\max}}\right)}$$

The setting for the operating mode selects an “absolute” or “relative” replica. If the setting is for “Absolute replica”, the P633 will operate with a fixed trip threshold Δ_{trip} of 100 %.

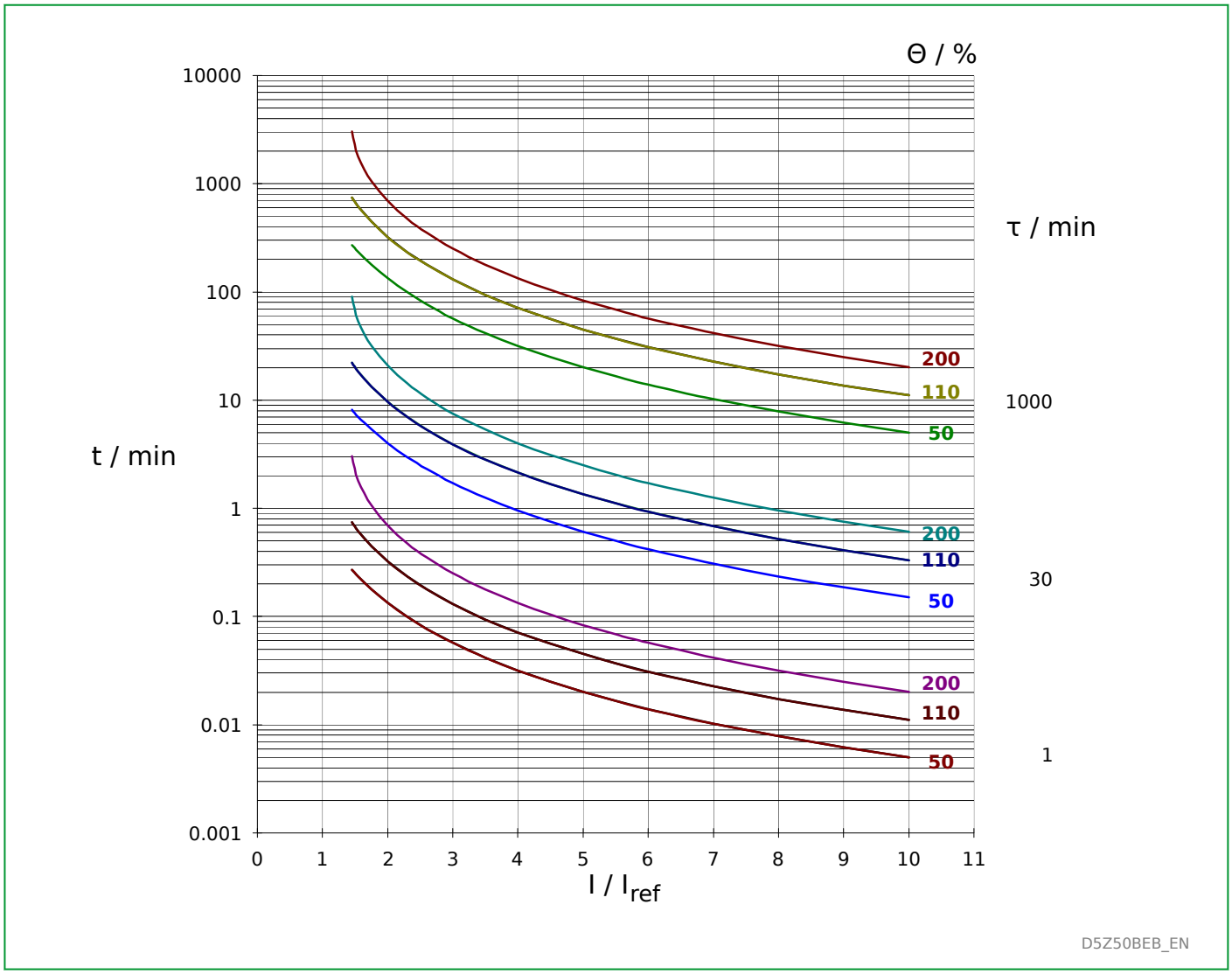

Fig. 3-142: Tripping characteristic of the thermal overload protection.

Tripping characteristics apply to $\Delta\vartheta_0$ = 0 % and identical settings for the maximum permissible coolant and the updated measurement of the object temperature.

3.26.5 Coolant Temperature Acquisition

To permit acquisition of the coolant temperature, an analogue I/O module Y must be fitted to the P633. If this module is not present then the setting at THRM1: Default CTA PSx is used in the calculation of the tripping time.

pThe setting at THRM1: Bl. f. CTA fault PSx defines whether the thermal overload protection function will be blocked in the event of a fault in the coolant temperature acquisition.

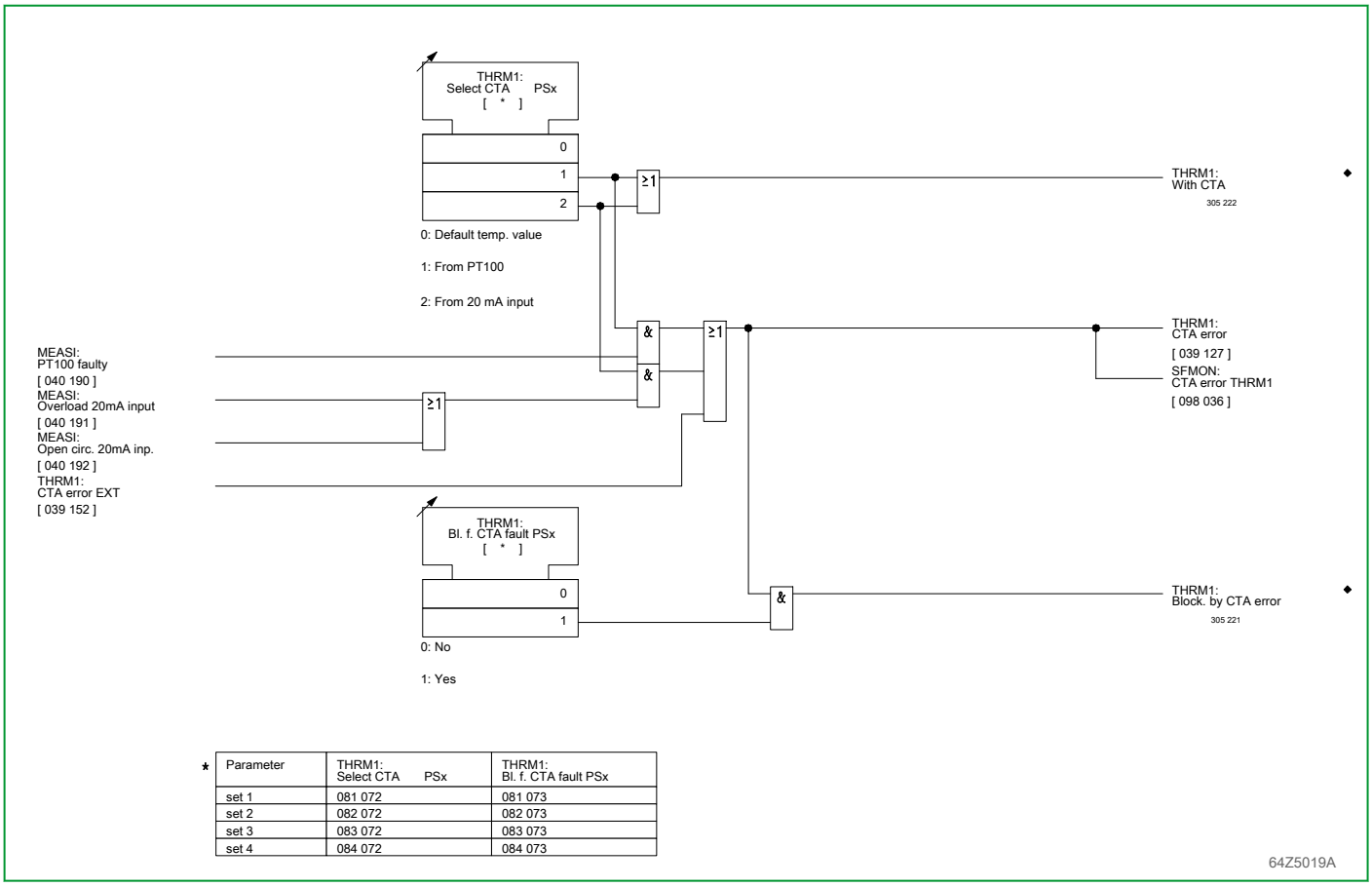

* Parameter	THRM1: Select CTA PSx	THRM1: Bl. f. CTA fault PSx
set 1	081 072	081 073
set 2	082 072	082 073
set 3	083 072	083 073
set 4	084 072	084 073

Fig. 3-143: Monitoring the coolant temperature acquisition (ambient temperature input)

3.26.6 Warning Signal

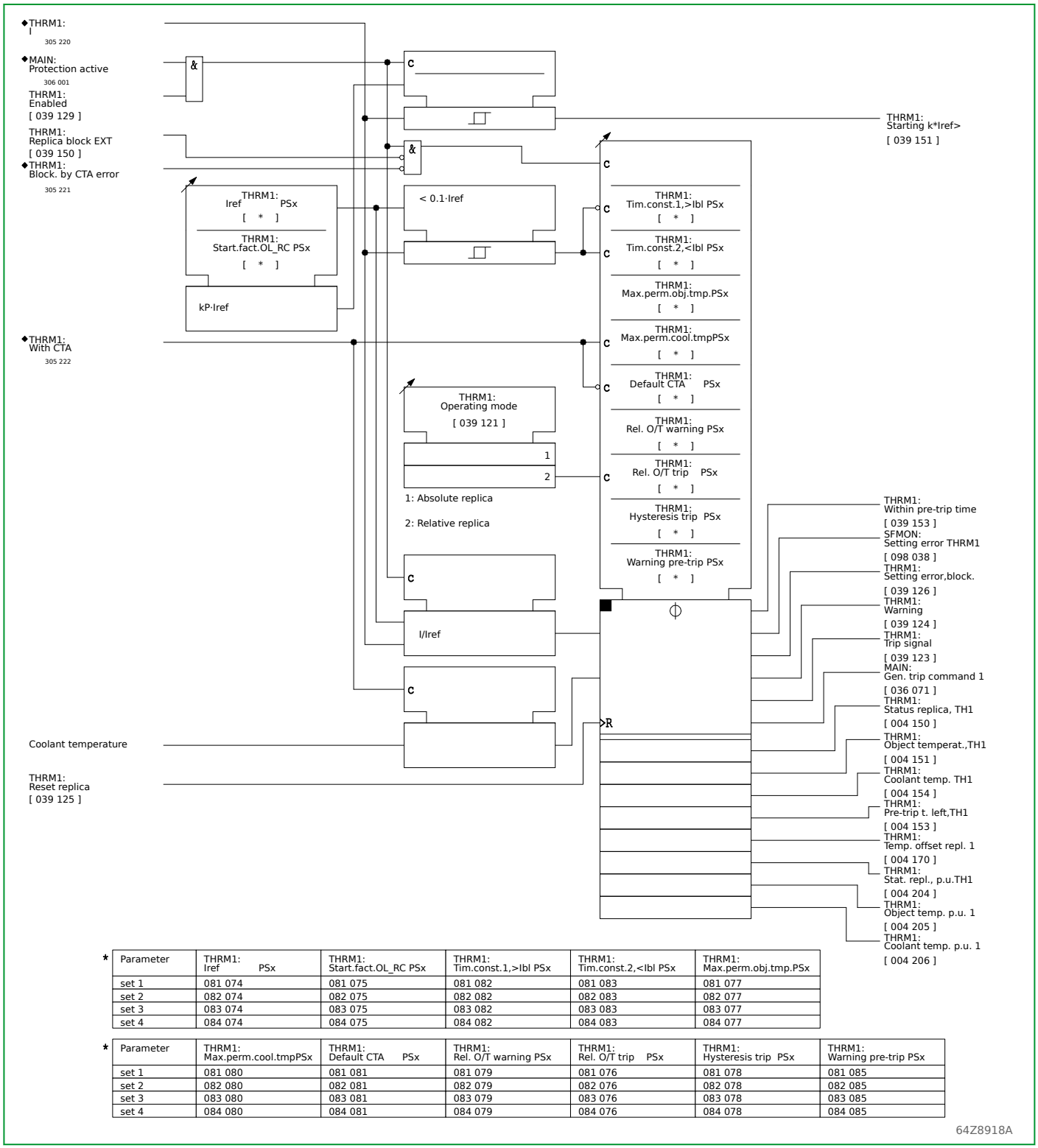

*

Parameter	THRM1: Iref PSx	THRM1: Start.fact.OL_RC PSx	THRM1: Tim.const.1,>Ibl PSx	THRM1: Tim.const.2,<Ibl PSx	THRM1: Max.perm.obj.tmp.PSx
set 1	081 074	081 075	081 082	081 083	081 077
set 2	082 074	082 075	082 082	082 083	082 077
set 3	083 074	083 075	083 082	083 083	083 077
set 4	084 074	084 075	084 082	084 083	084 077

*

Parameter	THRM1: Max.perm.cool.tmpPSx	THRM1: Default CTA PSx	THRM1: Rel. O/T warning PSx	THRM1: Rel. O/T trip PSx	THRM1: Hysteresis trip PSx	THRM1: Warning pre-trip PSx
set 1	081 080	081 081	081 079	081 076	081 078	081 085
set 2	082 080	082 081	082 079	082 076	082 078	082 085
set 3	083 080	083 081	083 079	083 076	083 078	083 085
set 4	084 080	084 081	084 079	084 076	084 078	084 085

Fig. 3-144: Thermal overload protection.

A warning signal is issued when the thermal load reaches the warning level set at THRM1: Rel. O/T warning PSx. Moreover, a time-to-tripping threshold (pre-trip time) can be set. When the time left until tripping falls below the setting at THRM1: Warning pre-trip PSx, a warning signal will be issued.

If the current falls below the default threshold of 0.1 I_{ref}, the buffer is discharged with the time constant set at THRM1: Tim.const.2,<lbl PSx.

The thermal replica may be reset from the local control panel or via an appropriately configured binary signal input. Resetting is possible even when thermal overload protection is disabled. Thermal overload protection can be blocked via an appropriately configured binary signal input.

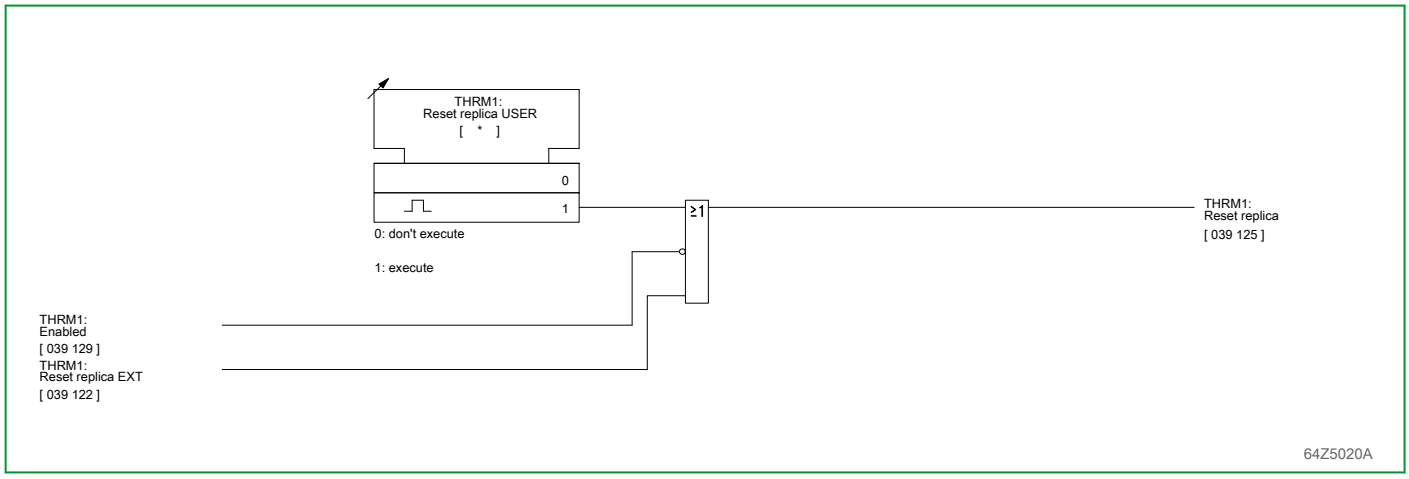

Fig. 3-145: Resetting the thermal replica.

3.27 Time-Voltage Protection (Function Group V<>)

The two-stage time-voltage protection function provided by the P633 evaluates the fundamental wave of the phase voltages.

3.27.1 Disabling and Enabling V<> Protection

V<> protection can be disabled or enabled using setting parameters. Moreover, enabling can be carried out separately for each parameter subset.

3.27.2 V<> Protection Readiness

V<> protection is ready if it is enabled and no fault has been detected in the voltage-measuring circuit by the measuring-circuit monitoring function.

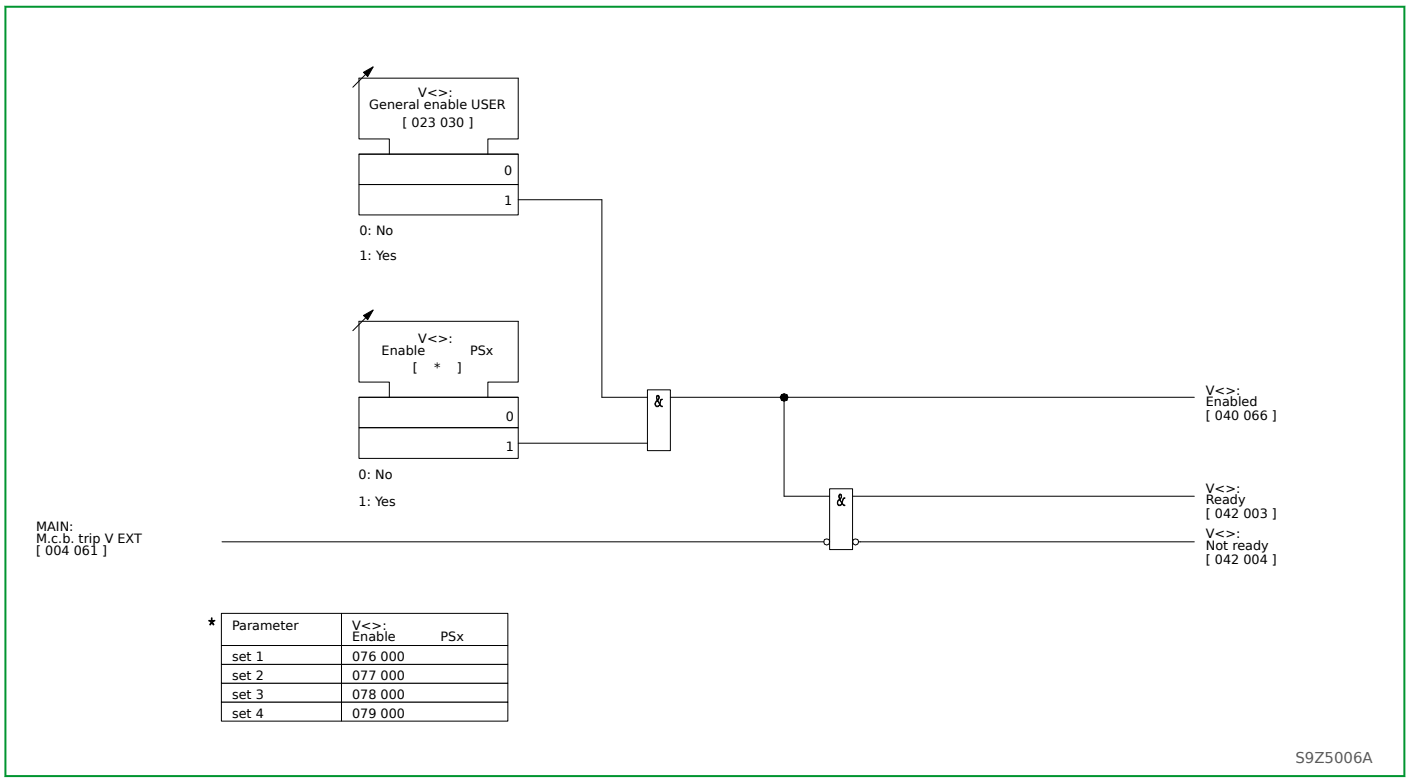

* Parameter	V<>: Enable PSx
set 1	076 000
set 2	077 000
set 3	078 000
set 4	079 000

Fig. 3-146: Enabling, disabling and readiness of V<> protection.

3.27.3 Voltage Monitoring

The P633 checks the voltage to determine whether it exceeds or falls below a set threshold. The triggers are followed by timer stages that can be blocked via appropriately configured binary signal inputs.

If undervoltage monitoring decisions are to be included in the trip commands, then it is recommended that transient signals be used. Otherwise the trip command would always be present when the system voltage was disconnected, and it would therefore not be possible to close the circuit breaker again.

Furthermore, time-voltage protection provides a time-window for each timer stage. The windows are defined by the setting V<>: Vmin> PSx as lower threshold for both timer stages and by the set operate value V< or V<< of the relevant timer stage and parameter subset as upper threshold. With an appropriate setting of the successive timer stages, this provision can be used to bridge short periods of voltage failure as encountered in switching operations.

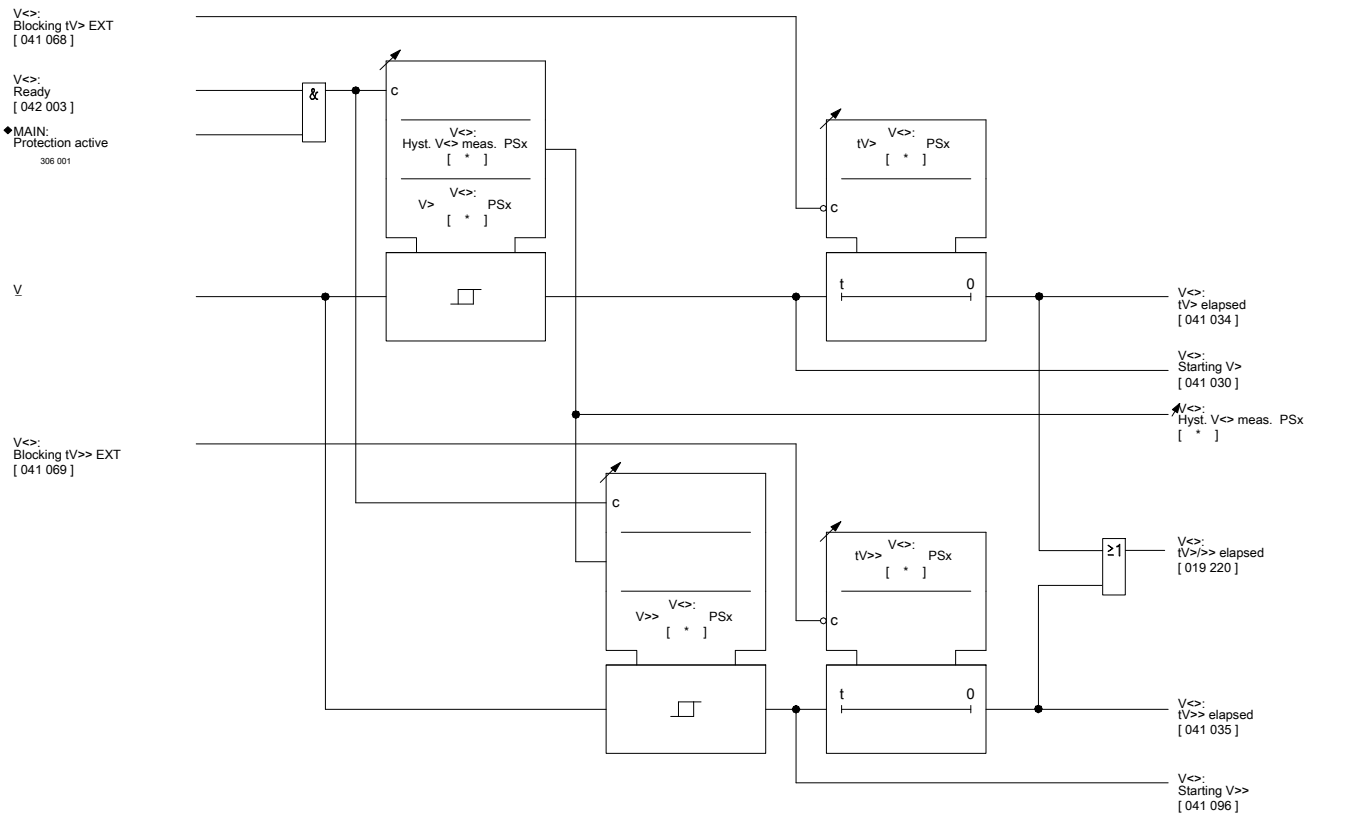

* Parameter	V<>: V> PSx	V<>: tV> PSx	V<>: V>> PSx	V<>: tV>> PSx	V<>: Hyst. V<> meas. PSx
set 1	076 003	076 005	076 004	076 006	076 048
set 2	077 003	077 005	077 004	077 006	077 048
set 3	078 003	078 005	078 004	078 006	078 048
set 4	079 003	079 005	079 004	079 006	079 048

Fig. 3-147: Overvoltage monitoring

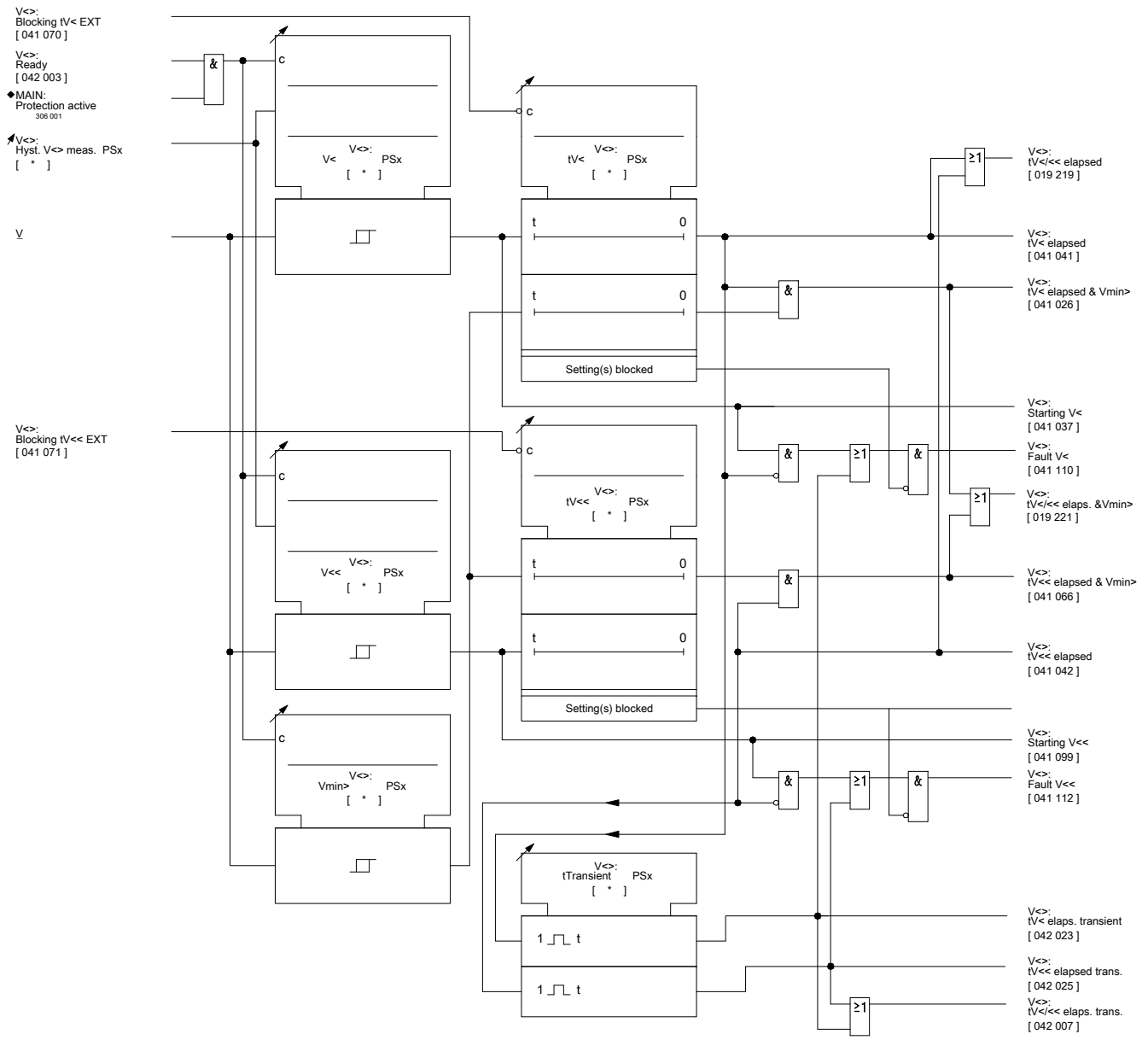

* Parameter	V<>: V< PSx	V<>: tV< PSx	V<>: Vmin> PSx
set 1	076 007	076 009	076 046
set 2	077 007	077 009	077 046
set 3	078 007	078 009	078 046
set 4	079 007	079 009	079 046

* Parameter	V<>: V<< PSx	V<>: tV<< PSx	V<>: tTransient PSx	V<>: Hyst. V<> meas. PSx
set 1	076 008	076 010	076 029	076 048
set 2	077 008	077 010	077 029	077 048
set 3	078 008	078 010	078 029	078 048
set 4	079 008	079 010	079 029	079 048

Fig. 3-148: Undervoltage monitoring

3.28 Over-/Underfrequency Protection (Function Group f<>)

The P633 monitors the voltage to determine whether its frequency exceeds or falls below set thresholds. The frequency is determined from the difference in time between the zero crossings of the voltage (voltage zeroes). The over-/underfrequency protection function has four stages. Subsequently, the operation of over-/underfrequency protection will be explained using the first stage as an example.

3.28.1 Disabling or Enabling Over-/Underfrequency Protection

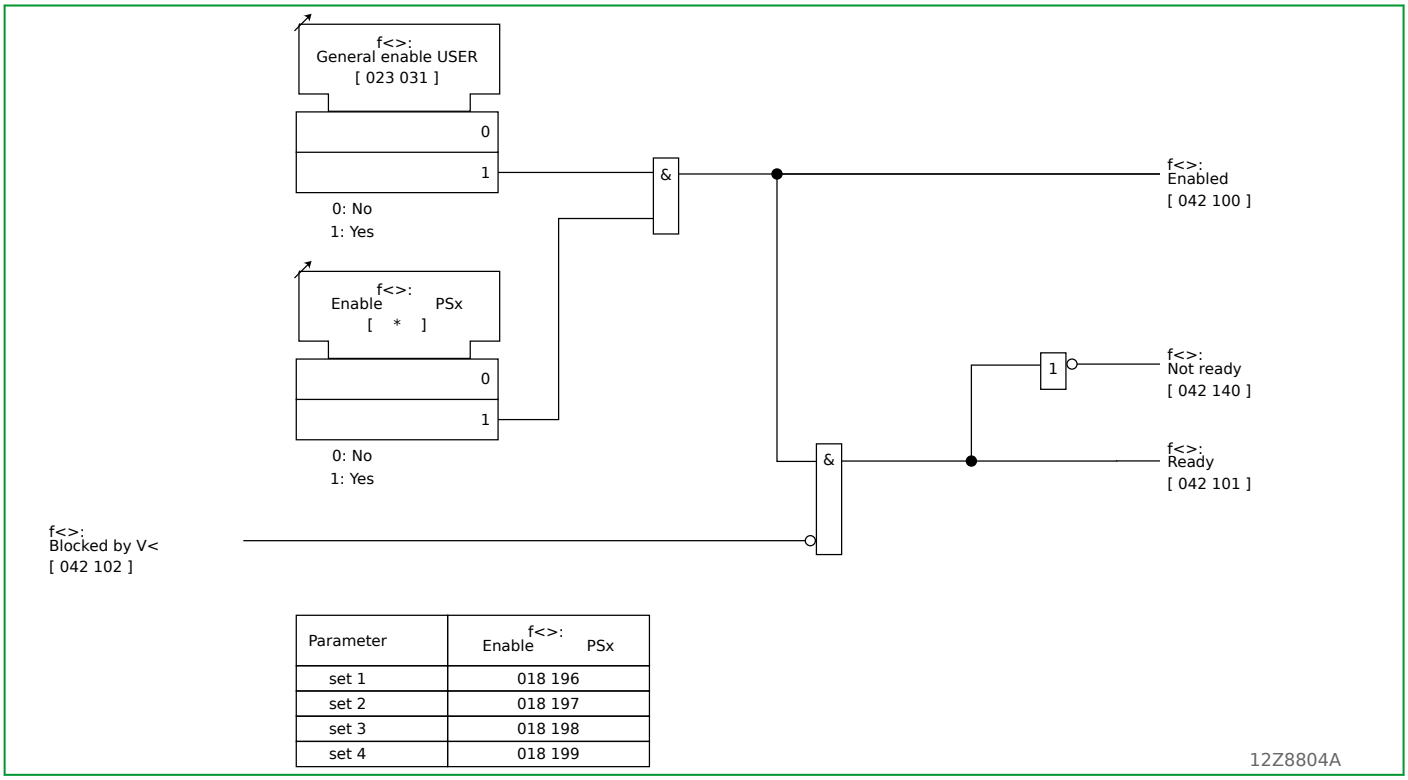

Parameter	f<>: Enable PSx
set 1	018 196
set 2	018 197
set 3	018 198
set 4	018 199

Fig. 3-149: Enabling, disabling and readiness of f<> protection.

The frequency protection can be disabled or enabled using setting parameters. Moreover, enabling can be carried out separately for each parameter subset.

3.28.2 Undervoltage Blocking and Evaluation Time

Over-/underfrequency protection requires a measuring voltage of sufficient magnitude. Over-/underfrequency protection will be blocked instantaneously if the measuring voltage falls below the set threshold of the undervoltage stage.

In order to avoid frequency stage starting caused by brief frequency fluctuations or interference, the evaluation time can be set by the user. The operate conditions must be satisfied for at least the duration of the set evaluation time in order for a signal to be issued.

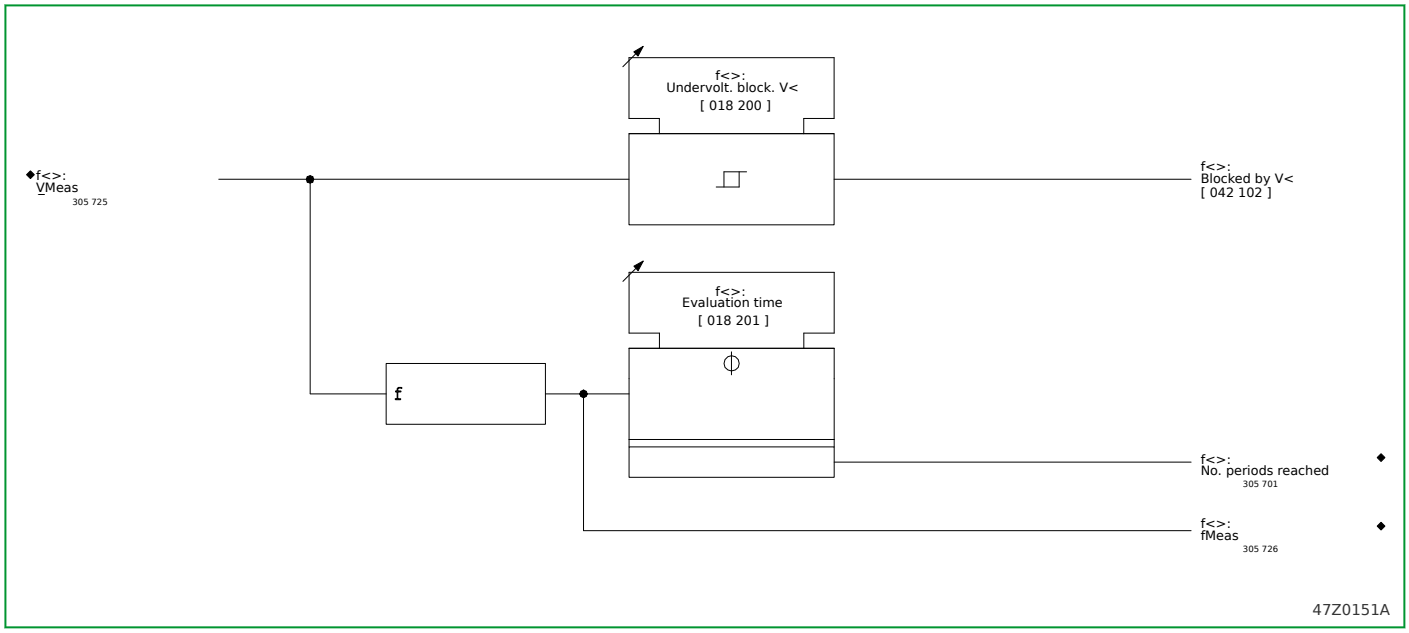

Fig. 3-150: Undervoltage blocking and evaluation time setting.

3.28.3 Operating Modes of Over-/Underfrequency Protection

For each stage of the over-/underfrequency protection function, the user can choose between the following operating modes:

- Frequency monitoring
- Frequency monitoring combined with differential frequency gradient monitoring (df/dt)
- Frequency monitoring combined with mean frequency gradient monitoring (Δf/Δt)

3.28.4 Frequency Monitoring

Depending on the setting, the P633 monitors the frequency to determine whether it exceeds or falls below set thresholds. If an operate threshold in excess of the set nominal frequency is set, the P633 checks to determine whether the frequency exceeds the operate threshold. If an operate threshold below the set nominal frequency is set, the P633 checks to determine whether the frequency falls below the operate threshold. If it exceeds or falls below the set threshold, a set timer stage is started. The timer stage can be blocked by way of an appropriately configured binary signal input.

3.28.5 Frequency Monitoring Combined with Differential Frequency Gradient Monitoring (df/dt)

In this operating mode of the over-/ underfrequency protection function, the frequency is also checked to determine whether the set frequency gradient is

reached (in addition to being monitored for exceeding or falling below the set threshold). Monitoring for overfrequency is combined with monitoring for a frequency increase; monitoring for underfrequency is combined with monitoring for a frequency decrease. If both operate conditions are satisfied, a set timer stage is started. The timer stage can be blocked by way of an appropriately configured binary signal input.

3.28.6 Frequency Monitoring Combined with Mean Frequency Gradient Monitoring (Δf/Δt)

The frequency gradient can differ for system disturbances in individual substations and may vary over time due to power swings. Therefore it makes sense to take the mean value of the frequency gradient into account for load-shedding systems.

In this operating mode of over-/underfrequency protection, frequency monitoring must be set for “underfrequency monitoring”.

Monitoring the mean value of the frequency gradient is started with the starting of frequency monitoring. If the frequency decreases by the set value Δf within the set time Δt, then the Δt/Δf monitoring function operates instantaneously and generates a trip signal. If a frequency change does not lead to an operate decision of the monitoring function, then the Δt/Δf monitoring function will be blocked until the underfrequency monitoring function drops out. The trip signal can be blocked by way of an appropriately configured binary signal input.

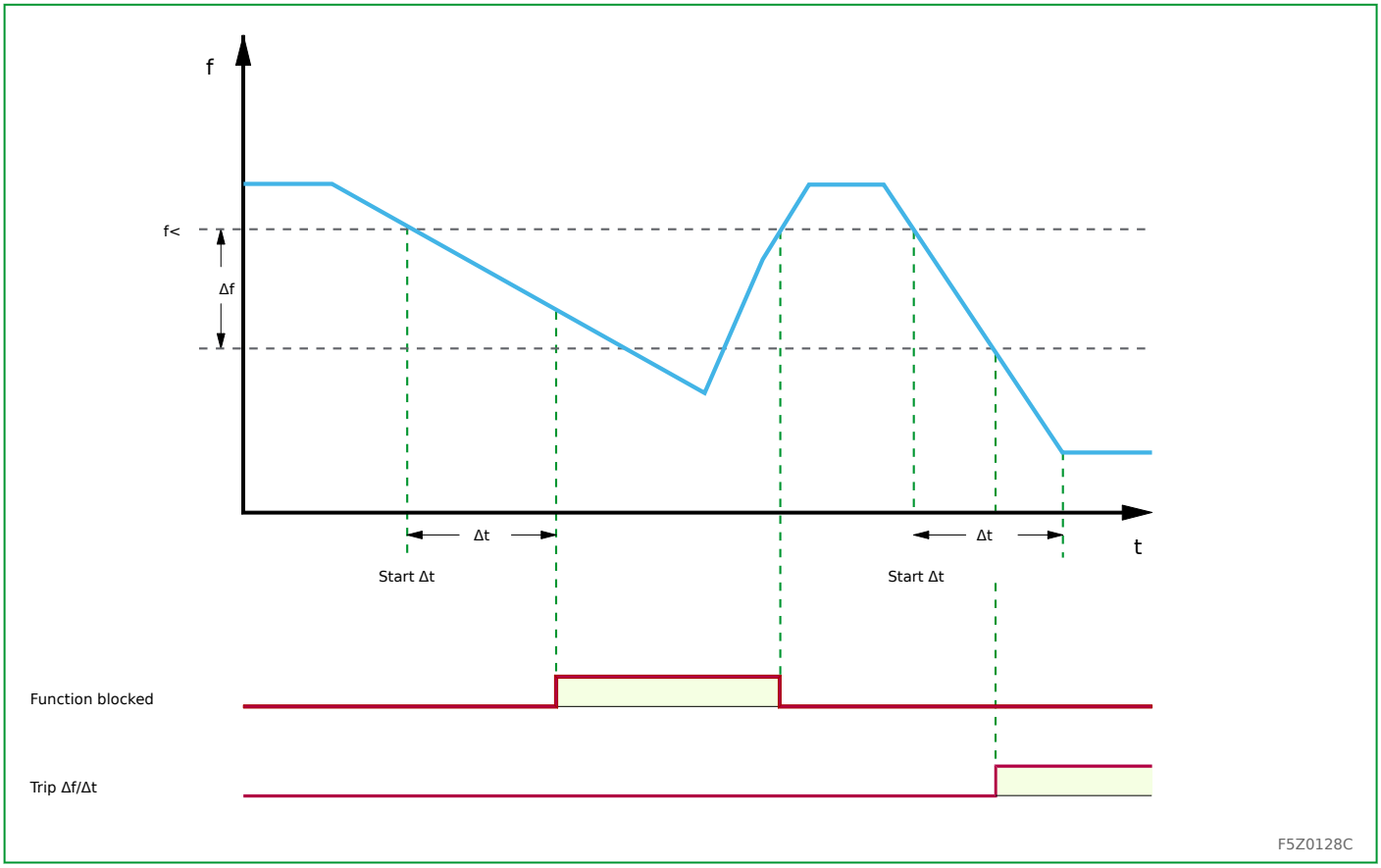

Fig. 3-151: Operation of frequency monitoring combined with Δf/Δt monitoring.

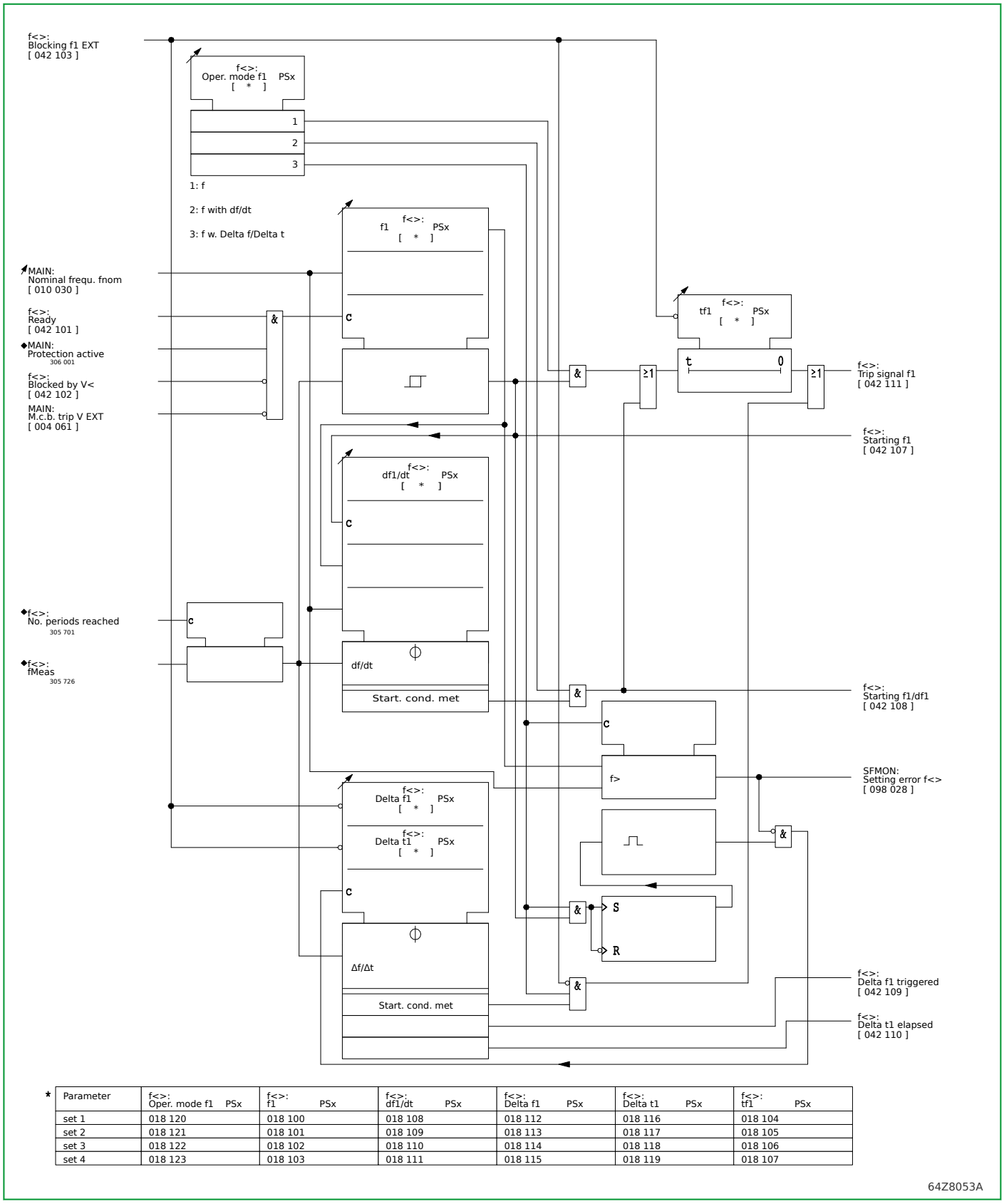

*

Parameter	f<>: Oper. mode f1 PSx	f<>: f1 PSx	f<>: df1/dt PSx	f<>: Delta f1 PSx	f<>: Delta t1 PSx	f<>: tf1 PSx
set 1	018 120	018 100	018 108	018 112	018 116	018 104
set 2	018 121	018 101	018 109	018 113	018 117	018 105
set 3	018 122	018 102	018 110	018 114	018 118	018 106
set 4	018 123	018 103	018 111	018 115	018 119	018 107

Fig. 3-152: First stage of the over-/ underfrequency protection function

3.28.7 f_{min}/f_{max} Measurement

For the acquisition of the minimum frequency during an underfrequency condition and for the acquisition of the maximum frequency during an overfrequency condition, the two following measured event values are available:

- f<>: Max. frequ. for f>
- f<>: Min. frequ. for f<

Both measured event values are reset automatically at the onset of a new overfrequency or underfrequency situation. A manual reset is also possible:

- f<>: Reset meas.val. USER

3.29 Overfluxing Protection (Function Group V/f)

The overfluxing protection function will detect an inadmissibly high induction B in the iron core of transformers which may have been caused either by a voltage increase and/or a frequency decrease.

3.29.1 Enabling or Disabling Overfluxing Protection

The overfluxing protection function can be enabled or disabled using setting parameters. Moreover, enabling can be carried out separately for each parameter subset.

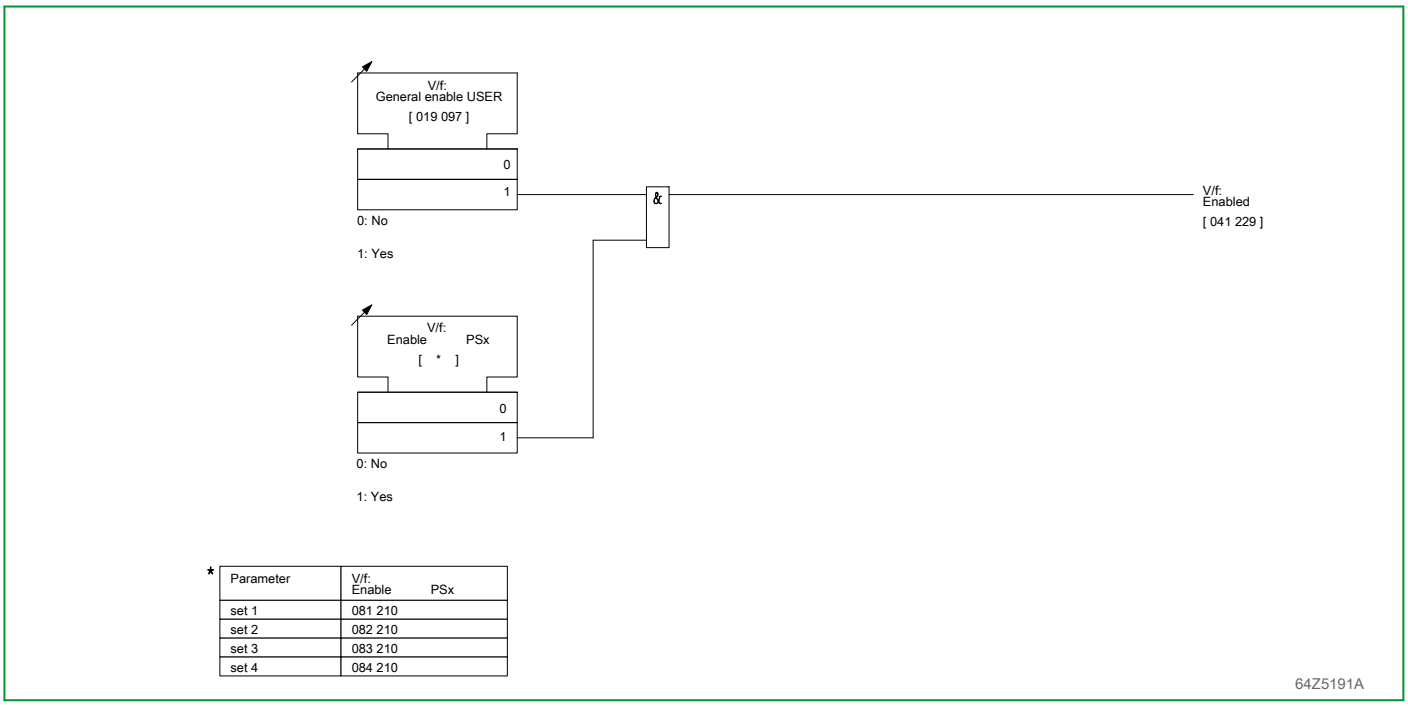

* Parameter	V/f: Enable PSx
set 1	081 210
set 2	082 210
set 3	083 210
set 4	084 210

Fig. 3-153: Enabling or disabling overfluxing protection

3.29.2 Conditioning the Measured Value

The overfluxing protection function will evaluate the voltage to frequency (V/f) ratio referred to nominal values. This ratio is proportional to the induction in the iron core of a transformer. The overfluxing measurement is not enabled unless the voltage and frequency values are within limits for admissible values.

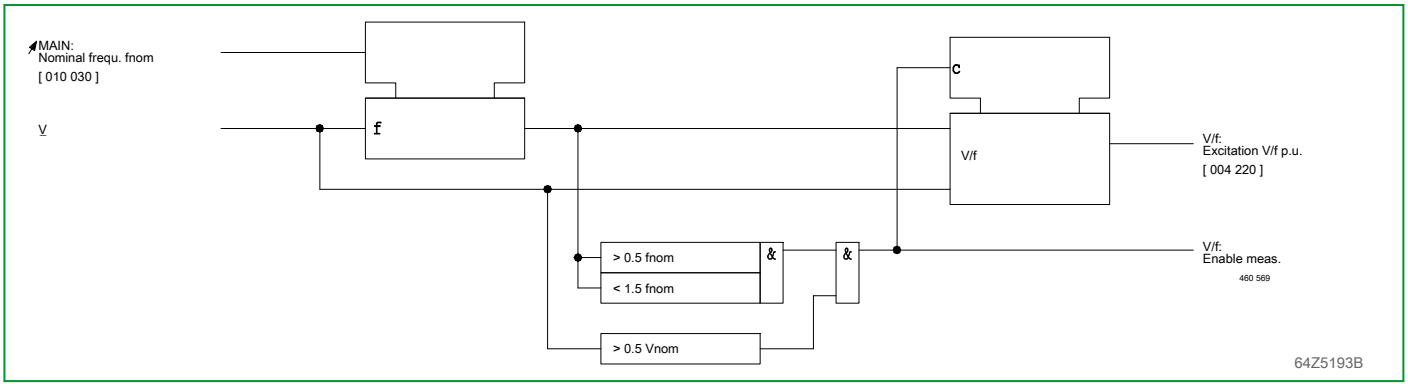

Fig. 3-154: Conditioning of measured value

3.29.3 Fixed-time Warning Stage

The overfluxing value (V/f) is monitored to determine whether it exceeds a set threshold. A timer stage is triggered when the overfluxing value exceeds this threshold and a signal is issued when the time delay has elapsed.

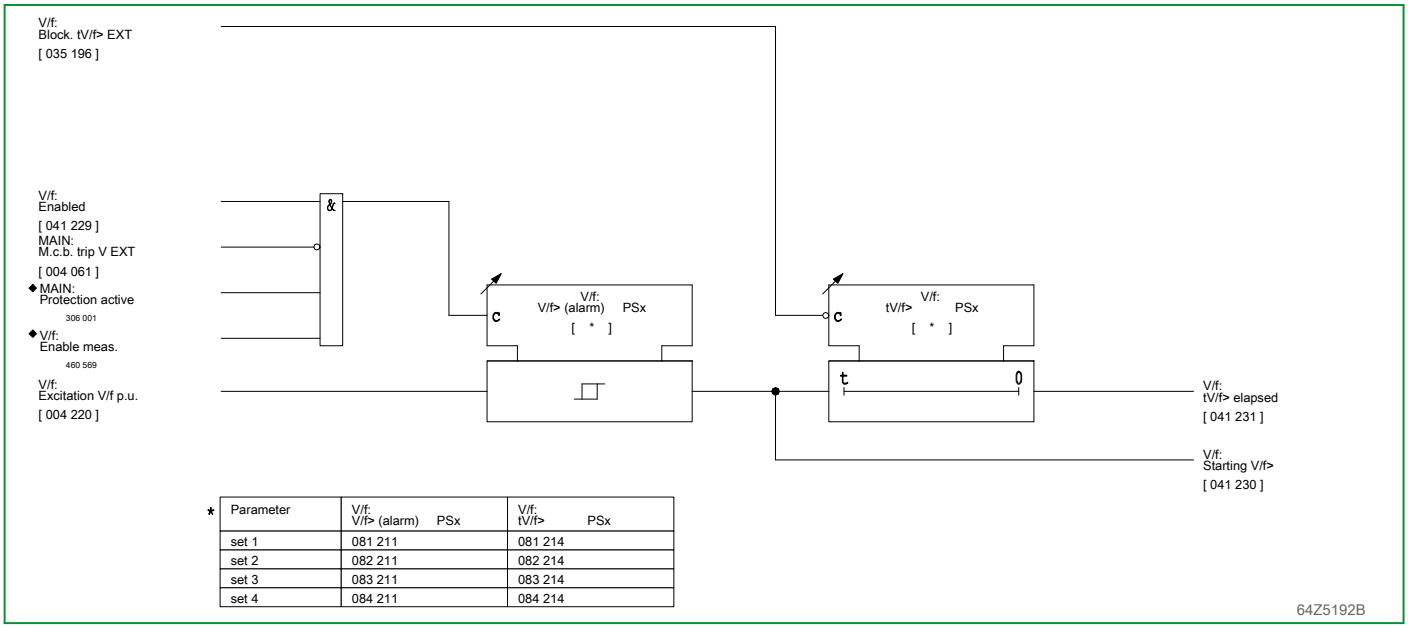

* Parameter	V/f: V/f> (alarm) PSx	V/f: tV/f> PSx
set 1	081 211	081 214
set 2	082 211	082 214
set 3	083 211	083 214
set 4	084 211	084 214

Fig. 3-155: Warning stage

3.29.4 Fixed-time Tripping Stage

The overfluxing value (V/f) is monitored to determine whether it exceeds a set threshold. A timer stage is triggered when the overfluxing value exceeds this threshold and a signal is issued when the time delay has elapsed.

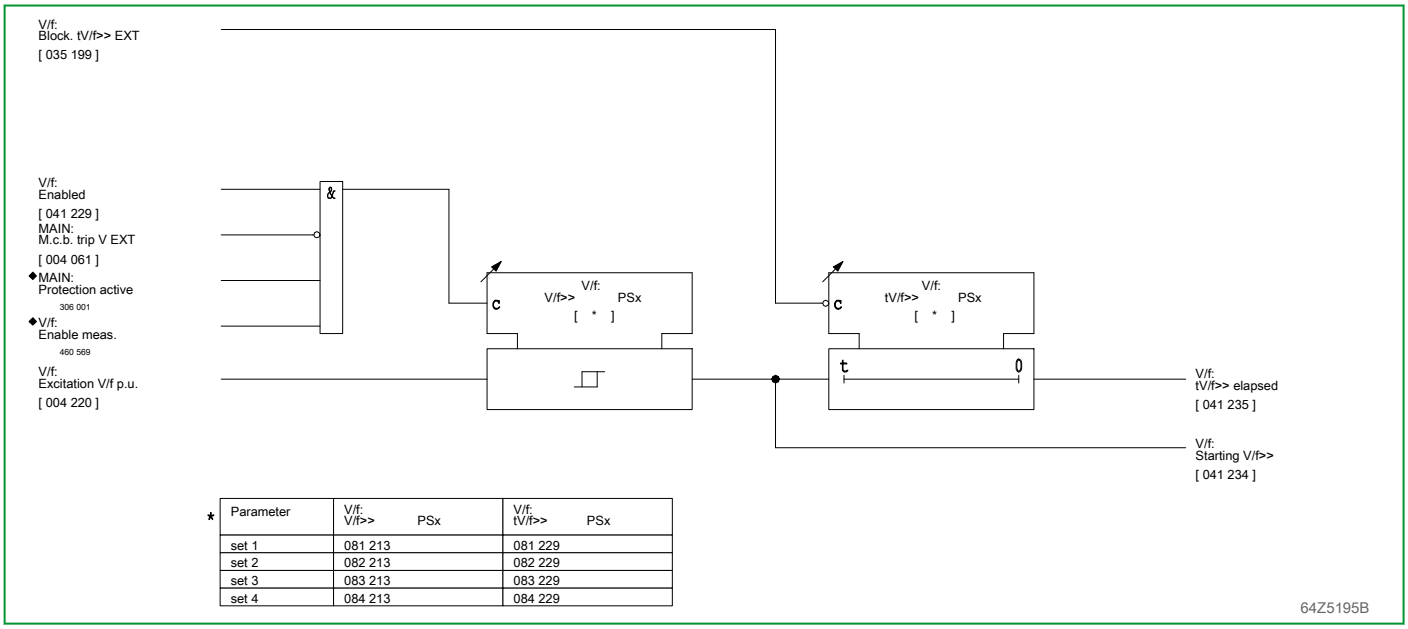

* Parameter	V/f: V/f>> PSx	V/f: tV/f>> PSx
set 1	081 213	081 229
set 2	082 213	082 229
set 3	083 213	083 229
set 4	084 213	084 229

Fig. 3-156: Fixed-time tripping stage

3.29.5 Variable-time Tripping Stage

The overfluxing value (V/f) is monitored to determine whether it exceeds the set threshold. When the overfluxing value exceeds this threshold the P633 will

determine the tripping time according to the overfluxing magnitude value and the set characteristic.

The variable-time tripping characteristic is set by defining 12 pairs of overfluxing values and their associated tripping time values. Intermediate values are obtained by interpolation. The setting of the characteristic is checked for plausibility with regard to a monotonically decreasing characteristic. With values of V/f > 1.6 the tripping time is limited to the value set for V/f = 1.6. The tripping characteristic with default setting values is displayed in Fig. 3-157, (p. 3-207).

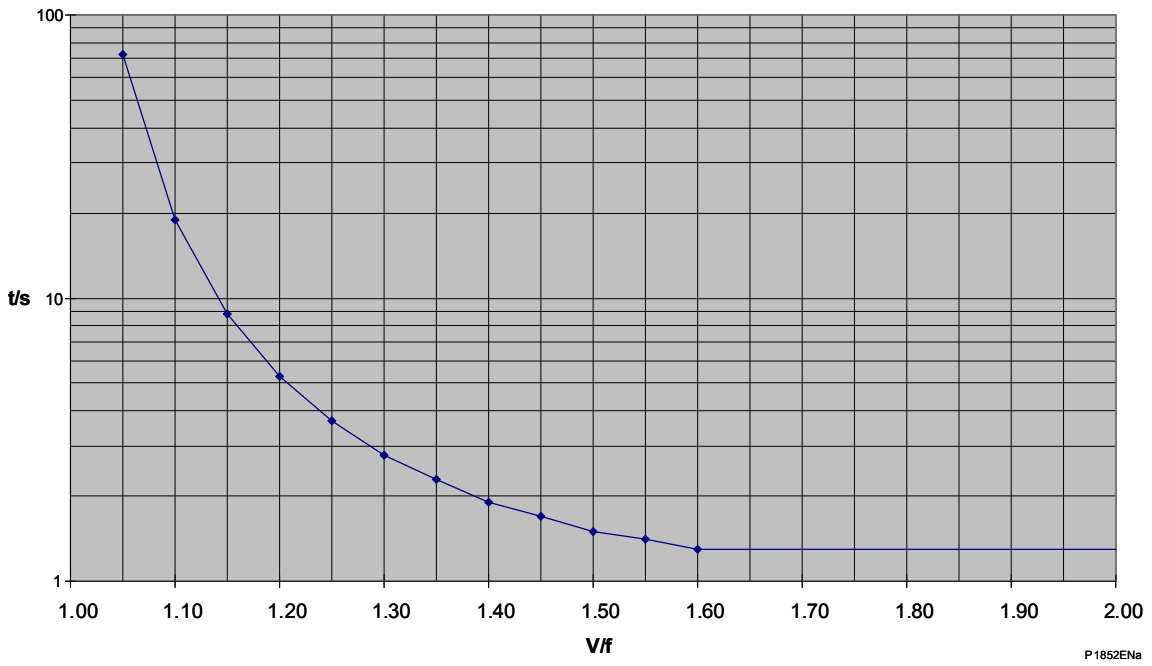

Fig. 3-157: Example of a tripping characteristic (with default settings)

After a starting, the elapsed starting time is accumulated in a buffer. When the starting drops out, the buffer memory is discharged. The discharge gradient is defined by the set cooling time. When the starting recurs the buffer memory is again accumulated with starting time values. If the accumulated starting time reaches the tripping time value determined by the P633 then the trip signal will be issued. The buffer memory content during an interrupted starting is shown in Fig. 3-158, (p. 3-208). In case A, the tripping time determined by the P633 is not reached by the accumulated starting time. In case B, on the other hand, a trip signal is issued.

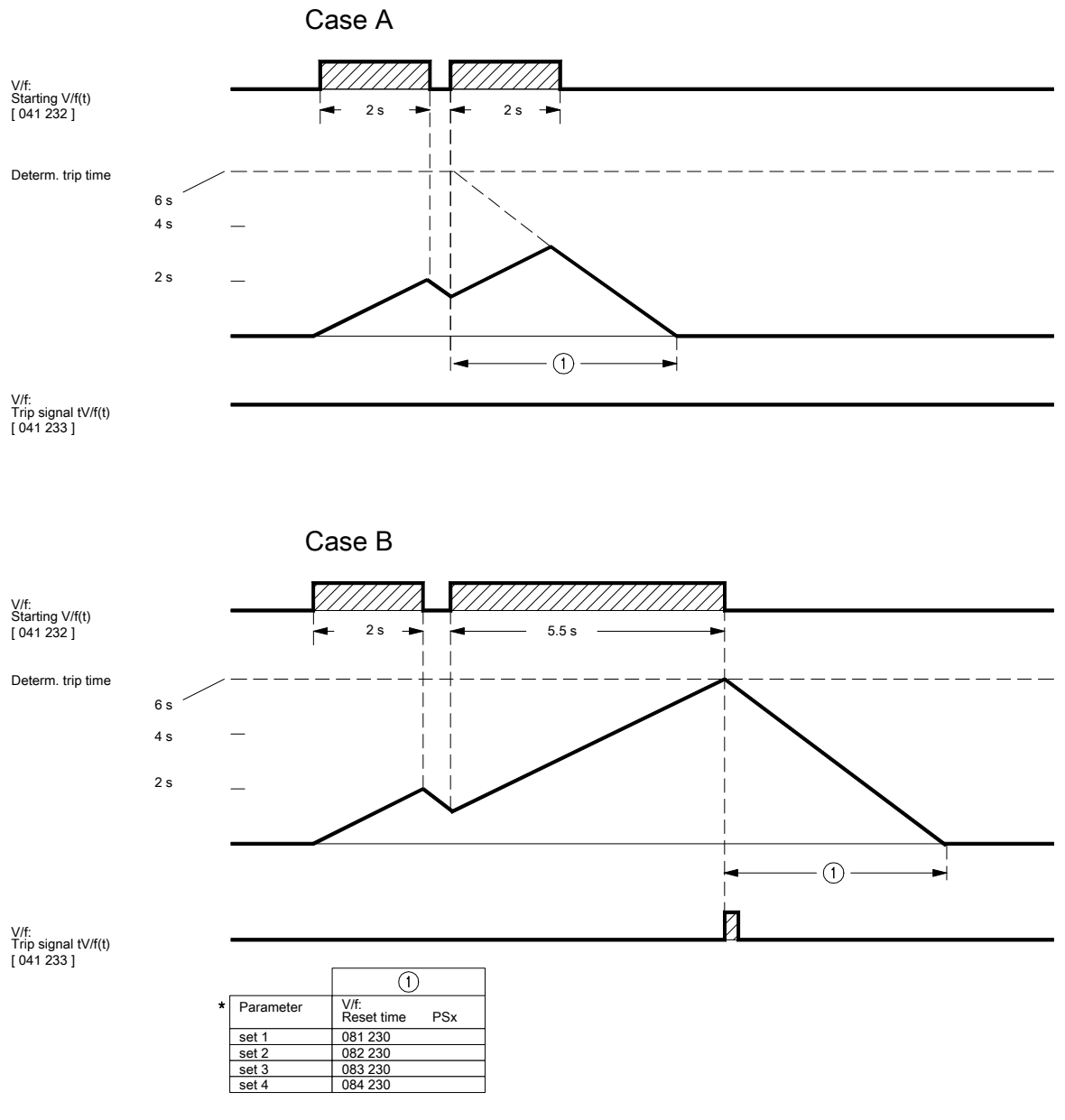

* Parameter	1 V/f: Reset time PSx
set 1	081 230
set 2	082 230
set 3	083 230
set 4	084 230

Fig. 3-158: Buffer memory content during a starting

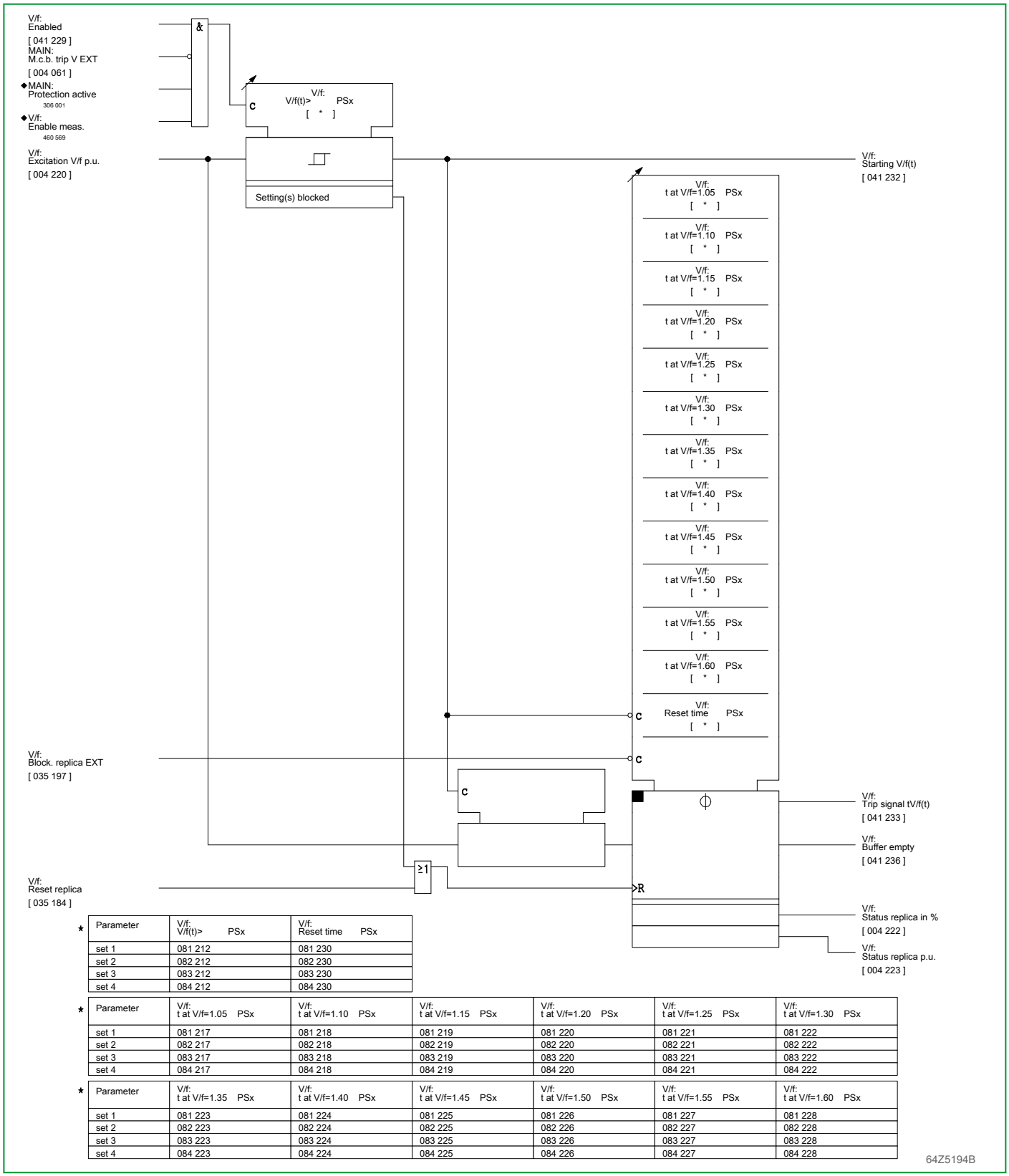

* Parameter	V/f: V/f(t)> PSx	V/f: Reset time PSx
set 1	081 212	081 230
set 2	082 212	082 230
set 3	083 212	083 230
set 4	084 212	084 230

* Parameter	V/f: t at V/f=1.05 PSx	V/f: t at V/f=1.10 PSx	V/f: t at V/f=1.15 PSx	V/f: t at V/f=1.20 PSx	V/f: t at V/f=1.25 PSx	V/f: t at V/f=1.30 PSx
set 1	081 217	081 218	081 219	081 220	081 221	081 222
set 2	082 217	082 218	082 219	082 220	082 221	082 222
set 3	083 217	083 218	083 219	083 220	083 221	083 222
set 4	084 217	084 218	084 219	084 220	084 221	084 222

* Parameter	V/f: t at V/f=1.35 PSx	V/f: t at V/f=1.40 PSx	V/f: t at V/f=1.45 PSx	V/f: t at V/f=1.50 PSx	V/f: t at V/f=1.55 PSx	V/f: t at V/f=1.60 PSx
set 1	081 223	081 224	081 225	081 226	081 227	081 228
set 2	082 223	082 224	082 225	082 226	082 227	082 228
set 3	083 223	083 224	083 225	083 226	083 227	083 228
set 4	084 223	084 224	084 225	084 226	084 227	084 228

Fig. 3-159: Variable-time tripping stage

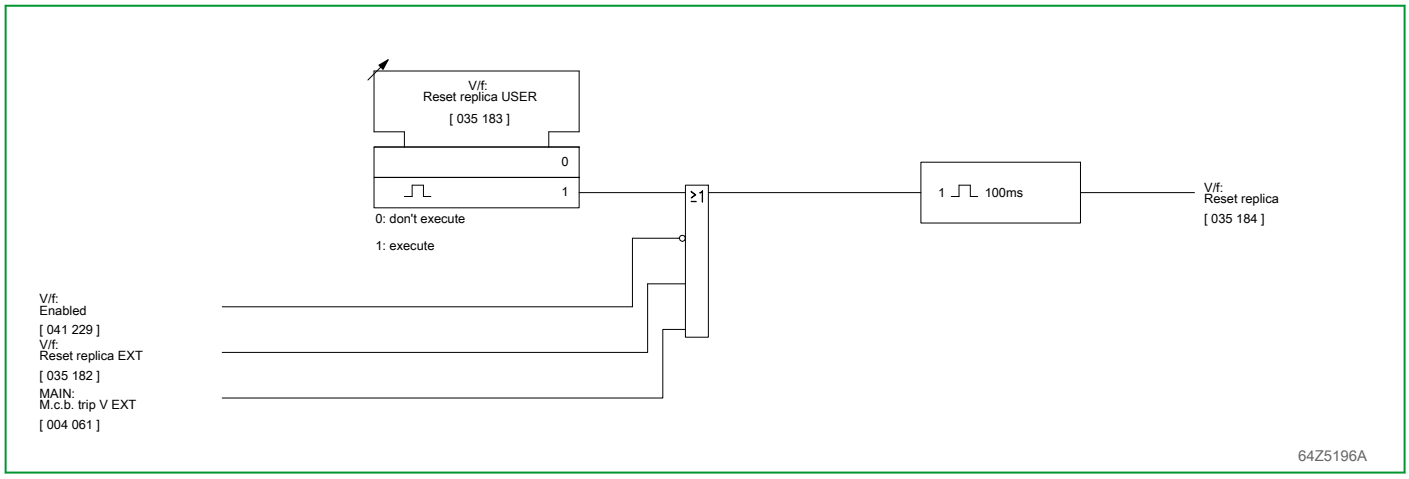

Fig. 3-160: Resetting of the thermal replica

3.30 Current Transformer Supervision (Function Group CTS)

The current transformer supervision function can prevent unwanted tripping by differential protection for faults in the CT's secondary circuit.

3.30.1 Enabling or Disabling the CTS Function

The current transformer supervision function can be disabled or enabled using setting parameters. Moreover, enabling can be carried out separately for each parameter subset.

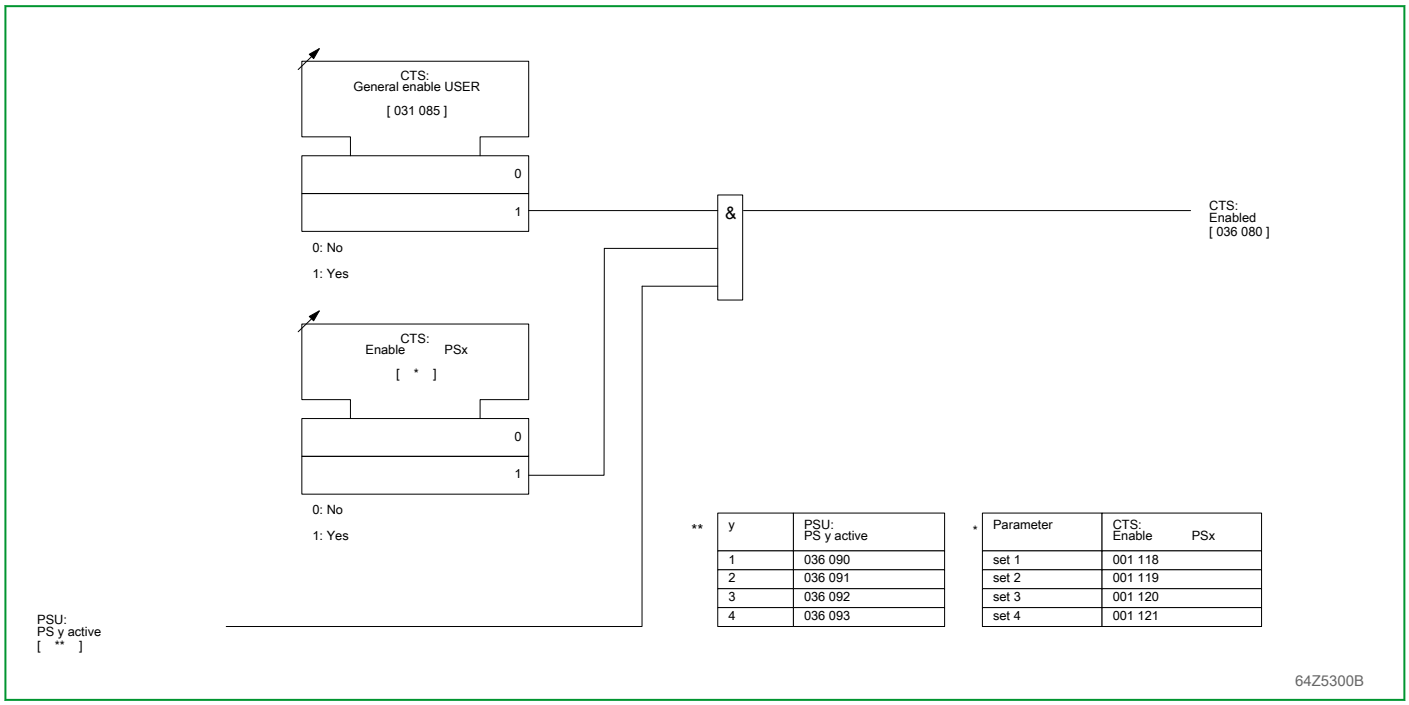

** y	PSU: PS y active
1	036 090
2	036 091
3	036 092
4	036 093

* Parameter	CTS: Enable PSx
set 1	001 118
set 2	001 119
set 3	001 120
set 4	001 121

Fig. 3-161: Enabling or disabling the CT Supervision

3.30.2 Blocking CTS

Current transformer supervision is blocked if one of the following conditions applies:

- Protection is disabled (off).
- The CTS function is not enabled.
- An external blocking signal is present.
- The general trip signal is present.
- Inrush stabilization or overfluxing restraint have operated.

Fig. 3-162: Blocking of current transformer supervision

3.30.3 Monitoring Condition

If CTS is ready, it will monitor the positive- and negative-sequence currents from all transformer ends (a, b, c).

A CT fault is detected when the following conditions are simultaneously present:

- The positive-sequence current exceeds the set threshold $I_{pos>}$ in at least 2 winding ends. This means that CTS can operate only if a minimum load current is present in the protected object.
- The negative- to positive-sequence current ratio exceeds a high set threshold value $I_{neg}/I_{pos>>}$ in a single winding end.
- In all the other ends, the negative- to positive-sequence current ratio is smaller than the low set threshold value $I_{neg}/I_{pos>}$, or no significant current is present (i.e. the positive-sequence current is lower than the $I_{pos>}$ threshold).

In such a case, there is a fault in the secondary circuit of the CT at the transformer end where a high negative-sequence current is present.

Because this function uses negative-sequence currents, it can only detect unbalanced CT faults. In practice, this does not present a problem as the occurrence of a three-pole CT fault is very unlikely.

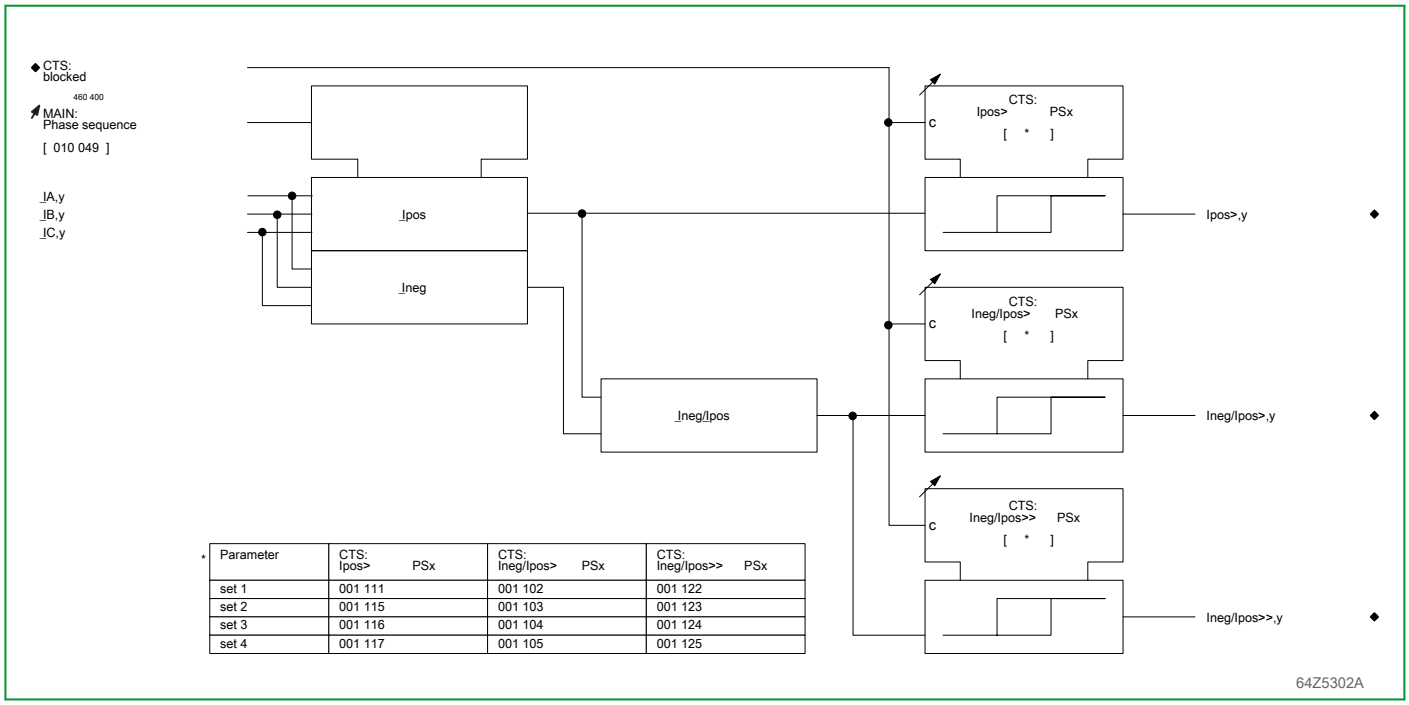

* Parameter	CTS: Ipos> PSx	CTS: Ineg/Ipos> PSx	CTS: Ineg/Ipos>> PSx
set 1	001 111	001 102	001 122
set 2	001 115	001 103	001 123
set 3	001 116	001 104	001 124
set 4	001 117	001 105	001 125

Fig. 3-163: Current evaluation referring to the respective end

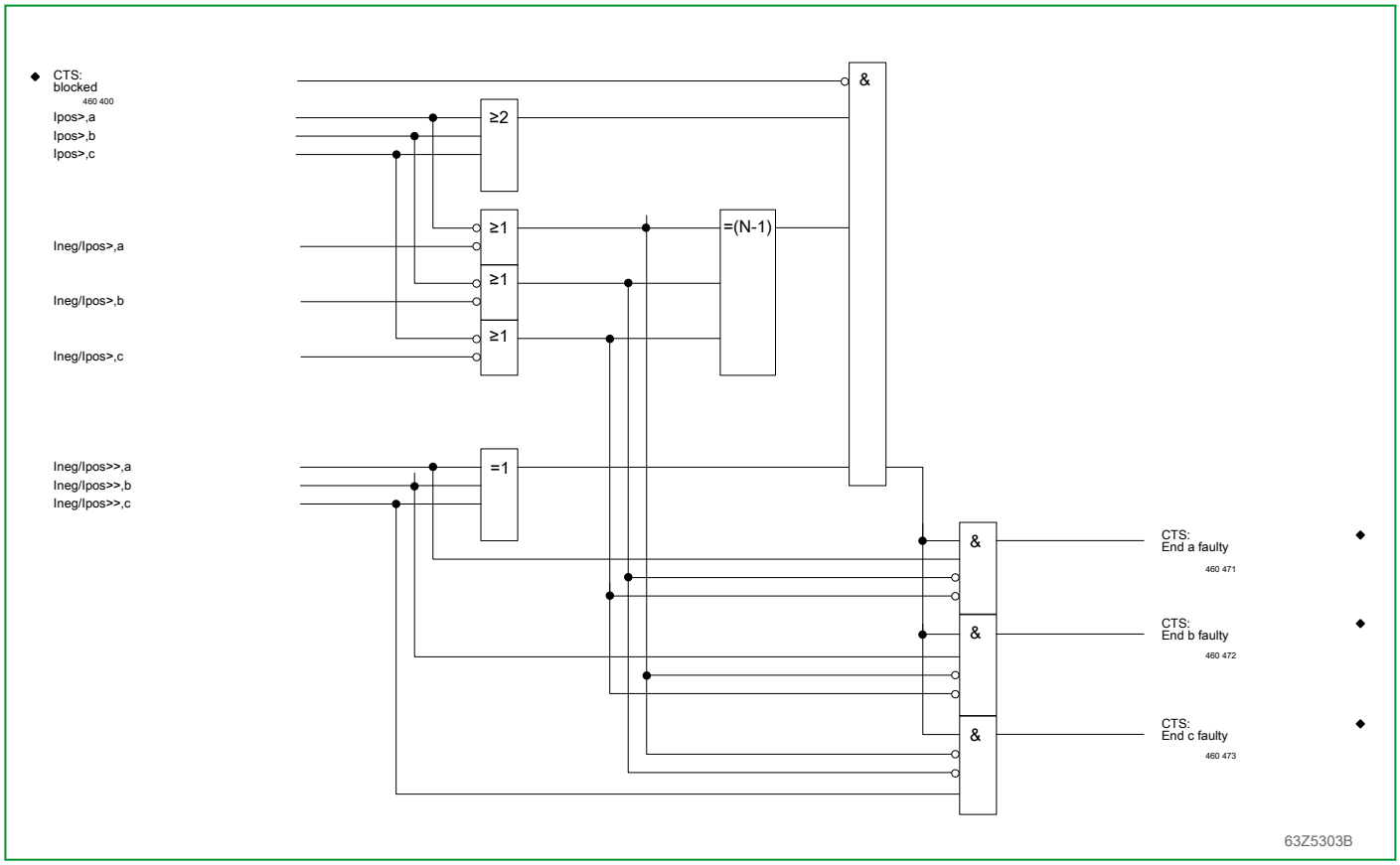

Fig. 3-164: CTS triggering condition

N represents the number of transformer ends, that is N = 3 (a, b, c).

3.30.4 Signaling and Indication

Triggering of the CTS function is signaled by multiple signals as well as by single signals referring to the respective ends. Beside the updated signals latched

signals are also available in order to achieve stable signaling behavior and a permanent differential protection characteristic with reduced sensitivity when, for instance, intermittent faults have occurred. The updated signal as well as the stored signal are time-delayed in order to suppress any signaling caused by a transient event. On the other hand, instantaneous signals are used to block or restrain the differential protection functions as fast as possible. As soon as a CTS condition is detected (CTS: Idiff>(CTS)active is present), the function will raise the differential protection low set threshold to the DIFF: Idiff>(CTS) PSx setting; see Fig. 3-165, (p. 3-214).

The setting for this value determines the CTS operating mode:

- Signaling only

  DIFF: Idiff>(CTS) PSx = DIFF: Idiff> PSx. Differential protection remains unrestricted, but there is a risk of unwanted tripping occurring under load current.

- Restricted operation

  DIFF: Idiff>(CTS) PSx = maximum load current. This will permit the safe differential protection behavior, even during CT failure. There will be no unwanted trip under any load condition, but protection will remain operational for internal faults with currents exceeding the load current.

- Blocking

  DIFF: Idiff>(CTS) PSx = DIFF: Idiff>> PSx. In practice differential protection is blocked for all currents under normal operating conditions.

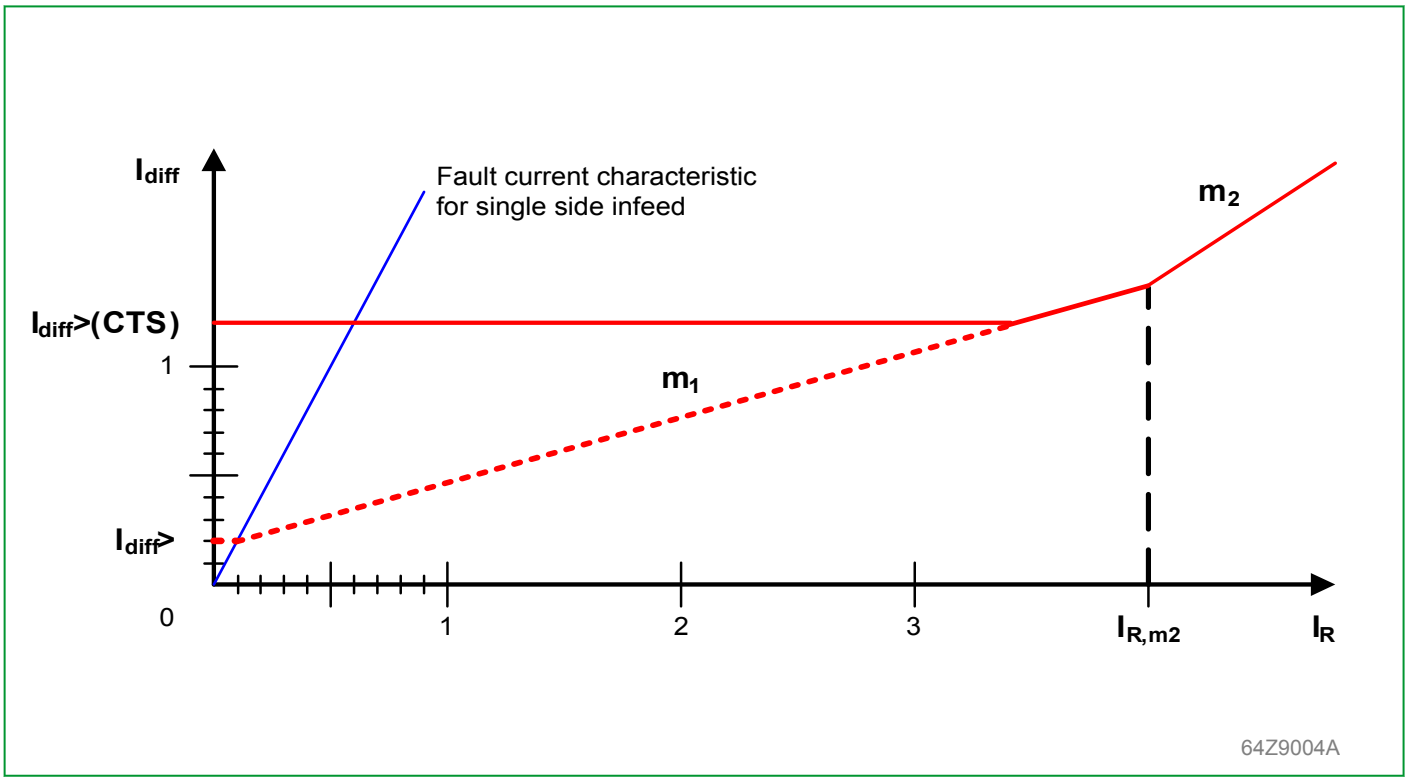

Fig. 3-165: Modification of the differential protection triggering characteristic with CTS active

When a CTS alarm signal is issued for one of the transformer ends (for example CTS: Alarm end a), the associated ground differential protection function is then blocked, if it has been set accordingly (for example by assigning REF_1 to end a: REF_1: CTS effective PSx = Yes).

3.30.5 Reset

Latched CTS signals can be reset using control parameters or through an appropriately configured binary signal input as well as by a general reset command.

3.30.6 Multiple Signaling from the CTS Function

The signals issued by the CTS function (and/or measuring circuit monitoring, see Section 3.31, (p. 3-217)) are combined into the MAIN: Meas. circ.I faulty signal. A signal is simultaneously issued by the self-monitoring function.

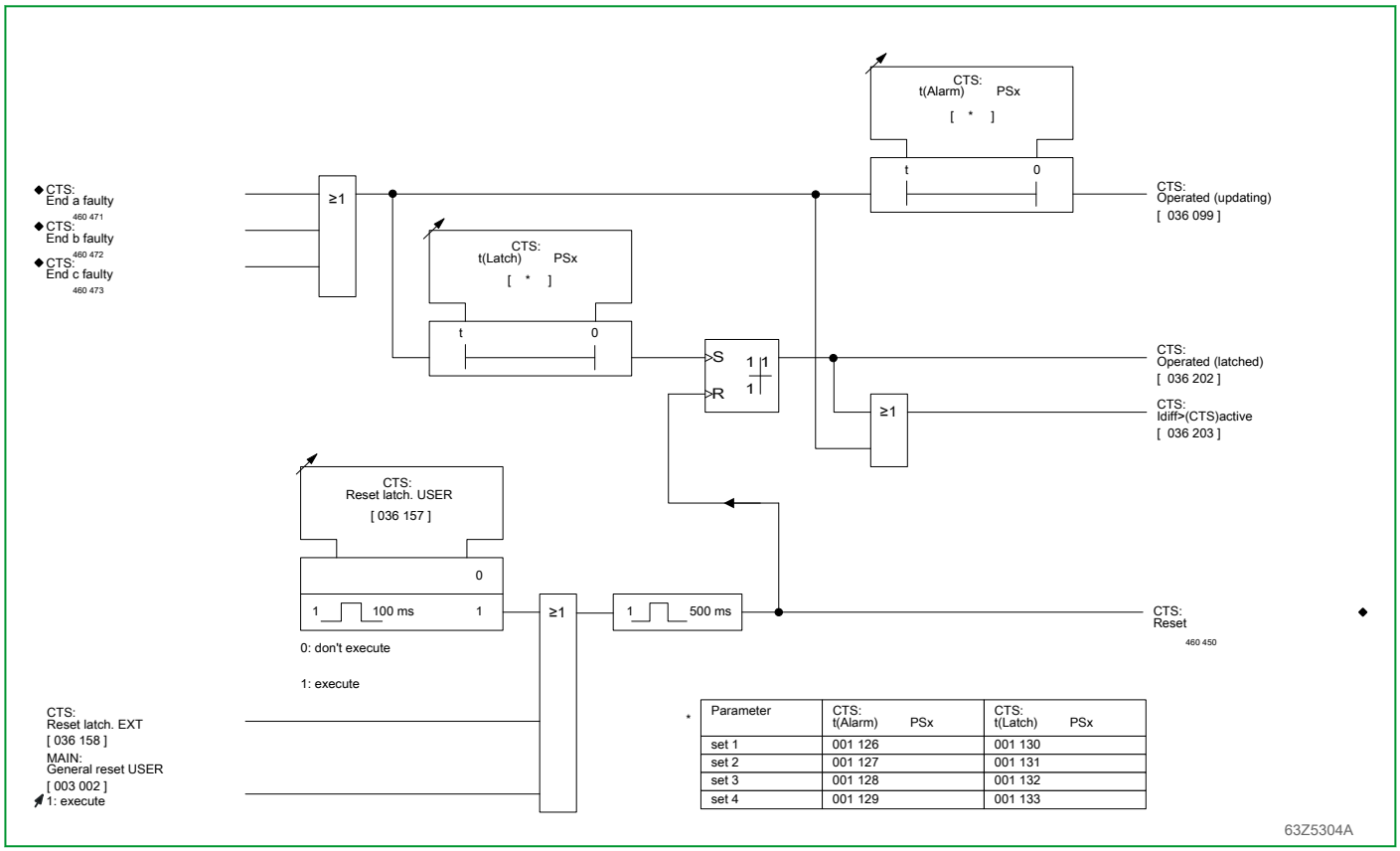

Parameter	CTS: t(Alarm) PSx	CTS: t(Latch) PSx
set 1	001 126	001 130
set 2	001 127	001 131
set 3	001 128	001 132
set 4	001 129	001 133

Fig. 3-166: CTS overreaching signals.

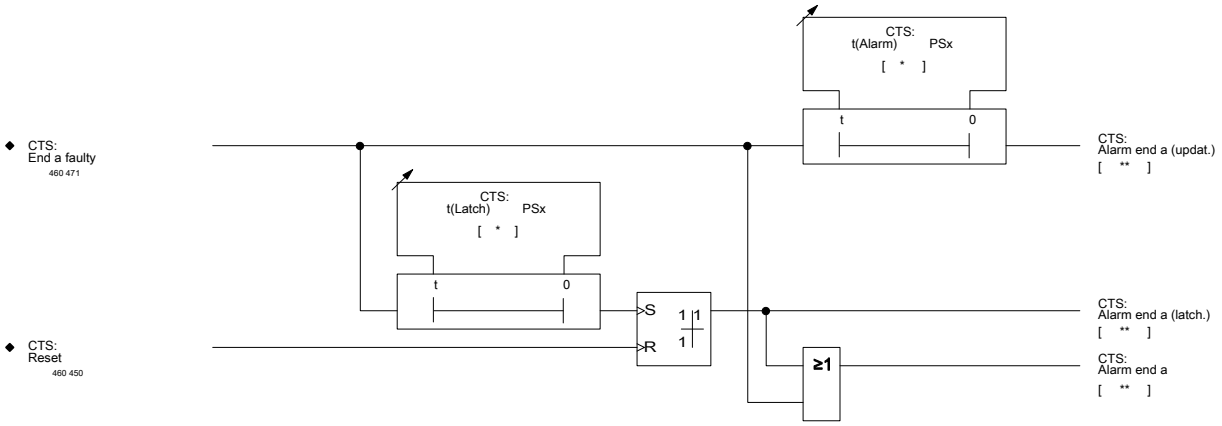

**

	CTS: Alarm end a (updat.)	CTS: Alarm end a (latch.)	CTS: Alarm end a
End a	036 081	036 204	036 205
End b	036 082	036 206	036 207
End c	036 083	036 208	036 209
End d	036 084	036 210	036 211

*

Parameter	CTS: t(Alarm) PSx	CTS: t(Latch) PSx
set 1	001 126	001 130
set 2	001 127	001 131
set 3	001 128	001 132
set 4	001 129	001 133

Fig. 3-167: CTS signals per end.

3.31 Measuring-Circuit Monitoring (Function Groups MCM_1 to MCM_3)

The measuring-circuit monitoring function featured by the P633 will detect faults in the secondary circuits of the CTs. Measuring-circuit monitoring functions MCM_1, MCM_2 or MCM_3 are permanently assigned to the transformer ends monitored by the P633.

Function group MCM_1 will serve as an example to illustrate the operation of the measuring-circuit monitoring functions. The same will apply to function groups MCM_2 and MCM_3.

3.31.1 Enabling or Disabling Measuring-Circuit Monitoring

The measuring-circuit monitoring function can be enabled or disabled using setting parameters. Moreover, enabling can be carried out separately for each parameter set.

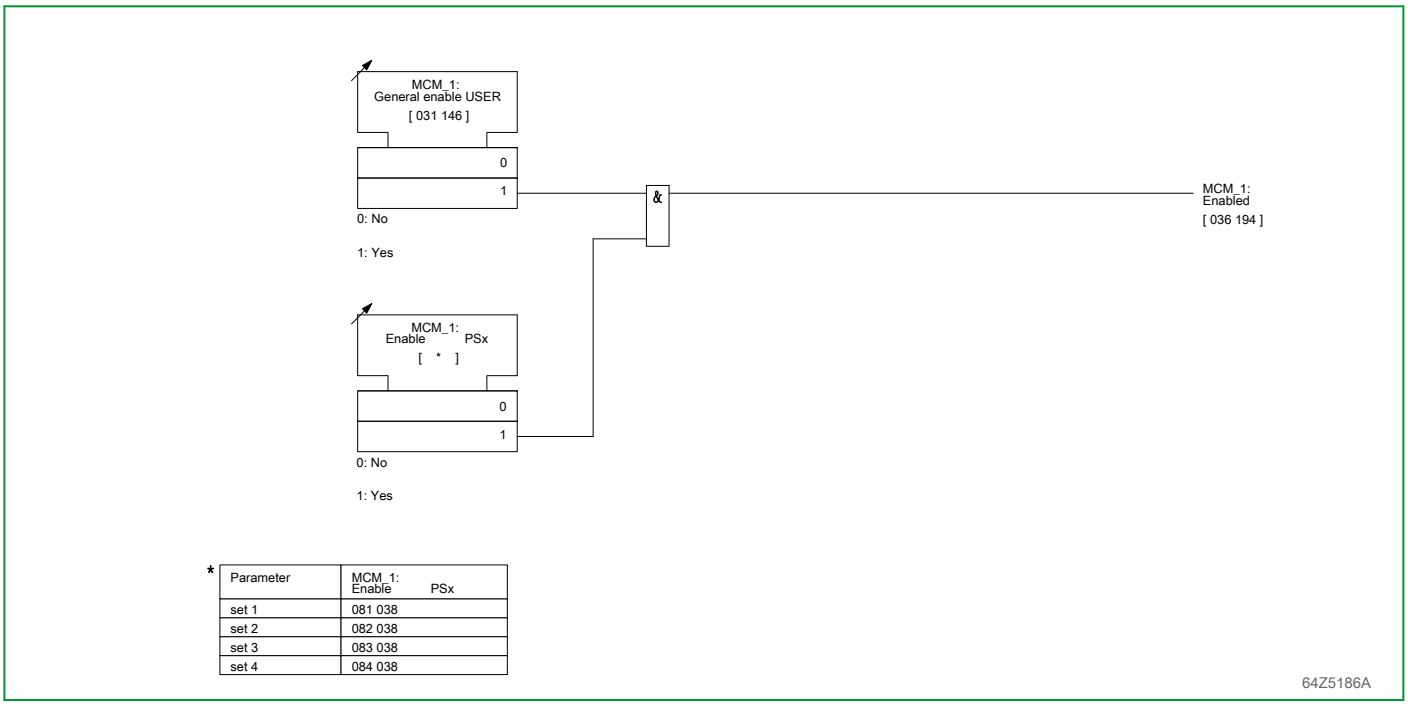

Fig. 3-168: Enabling or disabling measuring-circuit monitoring

3.31.2 Measuring-Circuit Monitoring

The negative- to positive-sequence current ratio is used as a criterion for measuring-circuit monitoring. The measuring-circuit monitoring function is triggered when the set ratio value, I_{neg}/I_{pos}, is exceeded and either the negative- or the positive-sequence current exceeds 0.02 I_{nom}. After the set operate time-delay has elapsed, a warning is issued.

The measuring-circuit monitoring functions can be used to detect broken conductors on the CTs' primary sides.

- The functions can now be blocked individually via input signals set at MCM_x: Blocking EXT.
- When the triggering condition is met an instantaneous starting signal is raised: (MCM_x: Starting).

In the following logic diagram, the measuring-circuit monitoring function is displayed using function group MCM_1 as an example.

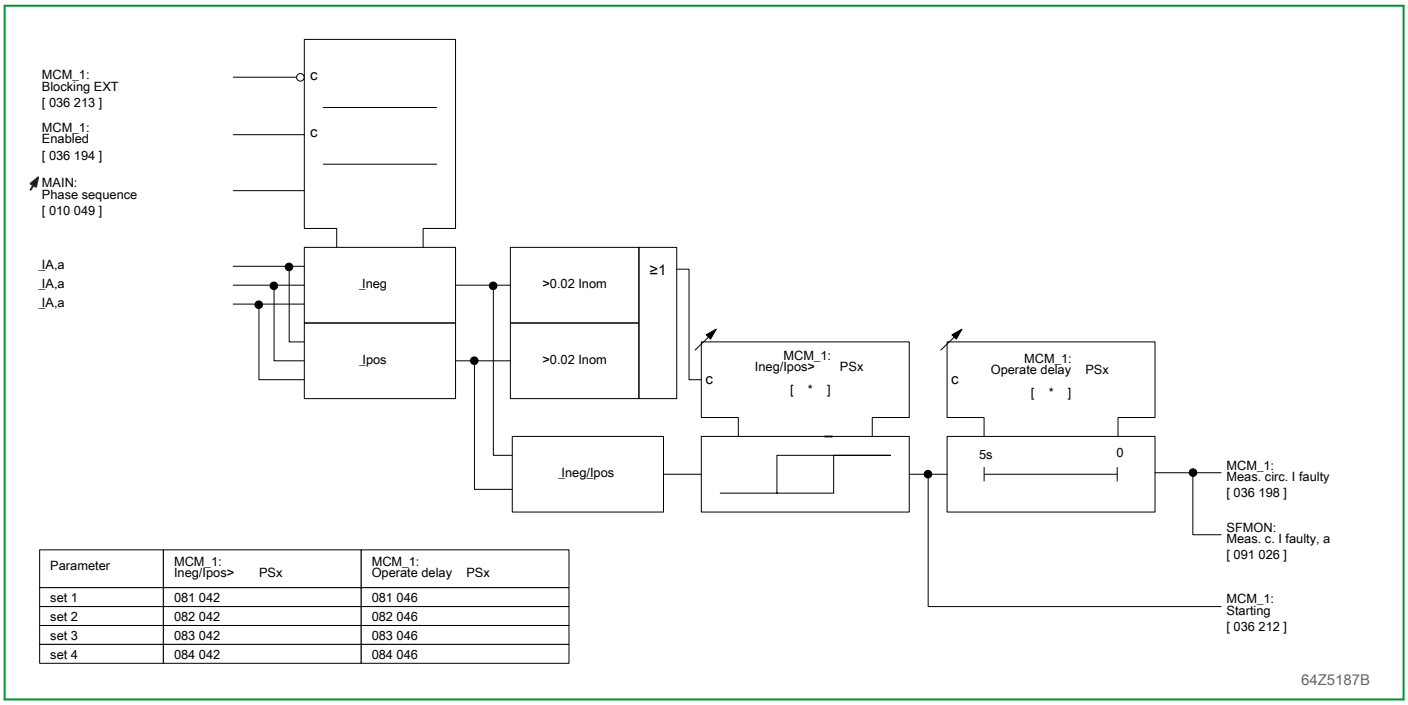

Parameter	MCM_1: Ineg/Ipos> PSx	MCM_1: Operate delay PSx
set 1	081 042	081 046
set 2	082 042	082 046
set 3	083 042	083 046
set 4	084 042	084 046

Fig. 3-169: Measuring-circuit monitoring for end a

3.31.3 Multiple Signaling from the Measuring-Circuit Monitoring Function

The signals issued by the measuring-circuit monitoring function (and/or current transformer supervision, see Section 3.30, (p. 3-211)) are grouped to form the MAIN: Meas. circ.I faulty multiple signal. A signal is simultaneously issued by the self-monitoring function.

Fig. 3-170: Signals issued by the measuring-circuit monitoring function

3.32 Circuit Breaker Failure Protection (Function Groups CBF_1 to CBF_3)

The P633 features circuit breaker failure (CBF) protection functions. After a trip command has been issued the CBF function checks that the circuit breaker has actually been opened.

The CBF function group is repeatedly available so that a dedicated function may be applied to each end on the protected object.

The following specifications apply to assigning the CBF protection functions to the physical measured current values and the internal logical signals.

3.32.1 Assigning Transformer Ends

The currents to be monitored by the respective CBF function may be selected using setting parameters:

Address	Description	Range of values
022 156	CBF_1: Select. meas. input	*End a* *End b* *End c*
022 157	CBF_2: Select. meas. input	
022 158	CBF_3: Select. meas. input	

3.32.2 Assigning Circuit Breakers

Each CBF_x function is permanently assigned to the respective circuit breakers CBx. This concerns monitoring of the CB contact positions in conjunction with the MAIN function of the protection unit. There are no specifications concerning the assignment of circuit breakers to ends on the protected object.

3.32.3 Assigning the Trip Command

Which of the trip commands is to be used as a start criterion for the respective CBF function may be selected by setting parameters:

Address	Description	Range of Values
022 202	CBF_1: Fct.assign. starting	MAIN: Gen. trip signal 1 MAIN: Gen. trip signal 2 MAIN: Gen. trip signal 3 MAIN: Gen. trip signal 4
022 216	CBF_2: Fct.assign. starting	
022 230	CBF_3: Fct.assign. starting	

The functional range made available by the circuit breaker failure protection function CBF_1 is documented in the following description. Function groups CBF_2 and CBF_3 provide the same functional range.

3.32.4 Enabling or Disabling the CBF Function

The activation of the function is enabled at CBF_1: General enable USER. If this enabling function has been activated, CBF can be enabled or disabled via setting parameters or through appropriately configured binary signal inputs. The front panel HMI and the binary signal inputs have equal priority in this regard. If only the function CBF_1: Enable EXT is assigned to a binary signal input, then CBF will be enabled by a positive edge of the input signal and disabled by a negative edge. If only the parameter CBF_1: Disable EXT has been assigned to a binary signal input, then a signal at this input will have no effect.

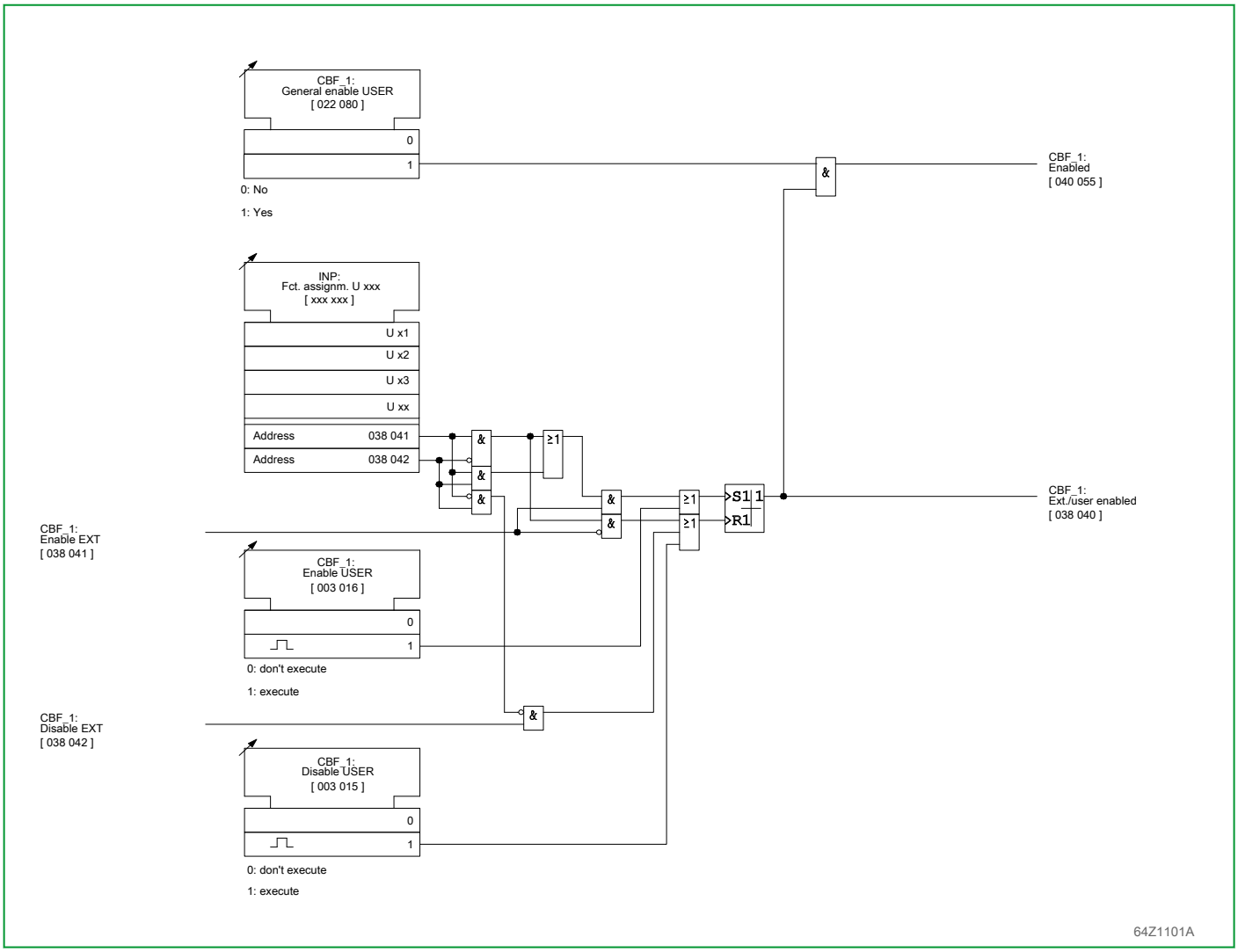

Fig. 3-171: Enabling or disabling circuit breaker failure protection, illustrated for CBF_1

3.32.5 Readiness of Circuit Breaker Protection

Circuit breaker failure protection will **not** be available should one of the following conditions be met:

- The CBF function is not activated.
- Circuit breaker protection is being blocked by an appropriately configured binary signal input.
- All CBF timer stages have been set to “Blocked”.

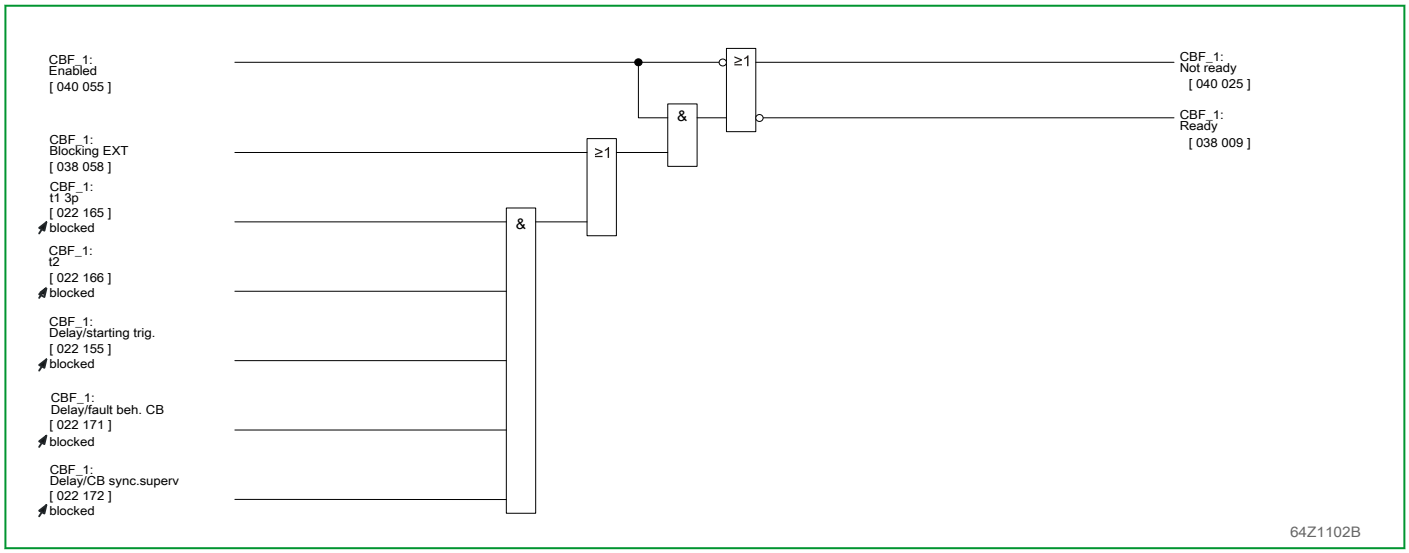

Fig. 3-172: CBF readiness

3.32.6 Detecting a CB Tripping

A break in current flow is the preferred criterion to detect a successful CB tripping. Protection functions that have triggering criteria not directly dependent on current flow (e.g. V<>), may additionally be provided with status signals from CB auxiliary contacts for evaluation.

3.32.7 Current flow monitoring

The current flow monitoring function is used to detect a break in current flow safely, immediately and pole selectively. The CBF function continuously compares sampled current values from the selected end with the set threshold value CBF_1: I<. As long as current flow criteria are met the phase-selective signals CBF_1: Current flow A, CBF_1: Current flow B, CBF_1: Current flow C and the multiple signal CBF_1: Current flow Phx will be continuously issued.

In addition to this line-associated current flow monitoring function a residual current monitoring function is available which can be enabled/disabled.

For this either the residual current value measured directly at the CT or the value derived from the three phase currents may be used.

Note that this choice is only possible when a measuring input for the residual current is available.

As long as a residual current exceeding the comparator threshold is flowing, the current flow criterion is not met and the corresponding signal (CBF_1: Current flow N) is issued. When the residual current monitoring function is disabled, no monitoring is carried out and the CBF_1: Current flow N = No signal is issued continuously.

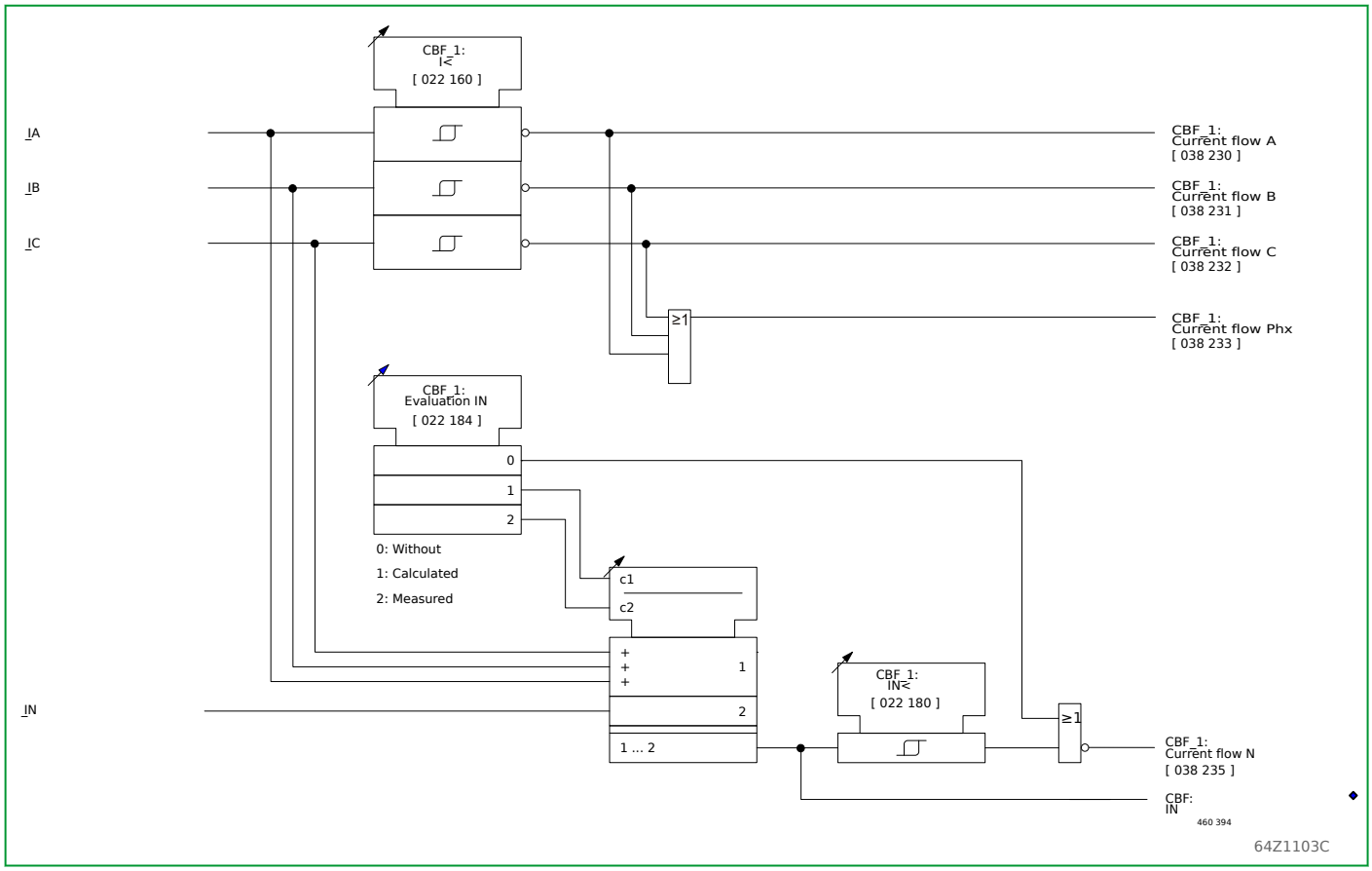

Fig. 3-173: Current flow monitoring

3.32.8 Evaluation of CB Status Signals

Trip signals included in the general trip command which use status signals provided by the CB auxiliary contacts in addition to current flow monitoring, can be selected with the parameter CBF_1: Fct.assignm. CBAux. .

Applying CB status signals depends on the type of auxiliary contacts available. The P633 can check the following CB status signals for plausibility and evaluate them:

- The ‘Open’ signal from the circuit breaker, MAIN: CB1 open 3p EXT
- The ‘Closed’ signal from the circuit breaker, MAIN: CB1 closed 3p EXT

Note that each circuit breaker CBx is permanently assigned to the respective CBF_x function. In the following description, CB1 is used as an example.

The evaluation of the CB status signals is blocked, if the configuration of the respective binary signal inputs or the signal levels are not plausible. This will result in the P633 issuing the signal CBF_1: CB pos. implausible. Evaluation of current criteria is not affected by this blocking.

If only one of the two possible CB status signals has been configured, then this configured signal will always be considered plausible by the P633.

As an alternative, the status signals from the external device may be used; see Section 3.13.12, (p. 3-105). The assignment that is necessary for this is carried out with the parameters MAIN: Sig. asg. CB1 open or MAIN: Sig. asg. CB1 closed, using CB1 as an example. Status signals from external devices are processed similar to the CB status signals MAIN: CB1 open 3p EXT and MAIN: CB1 closed 3p EXT

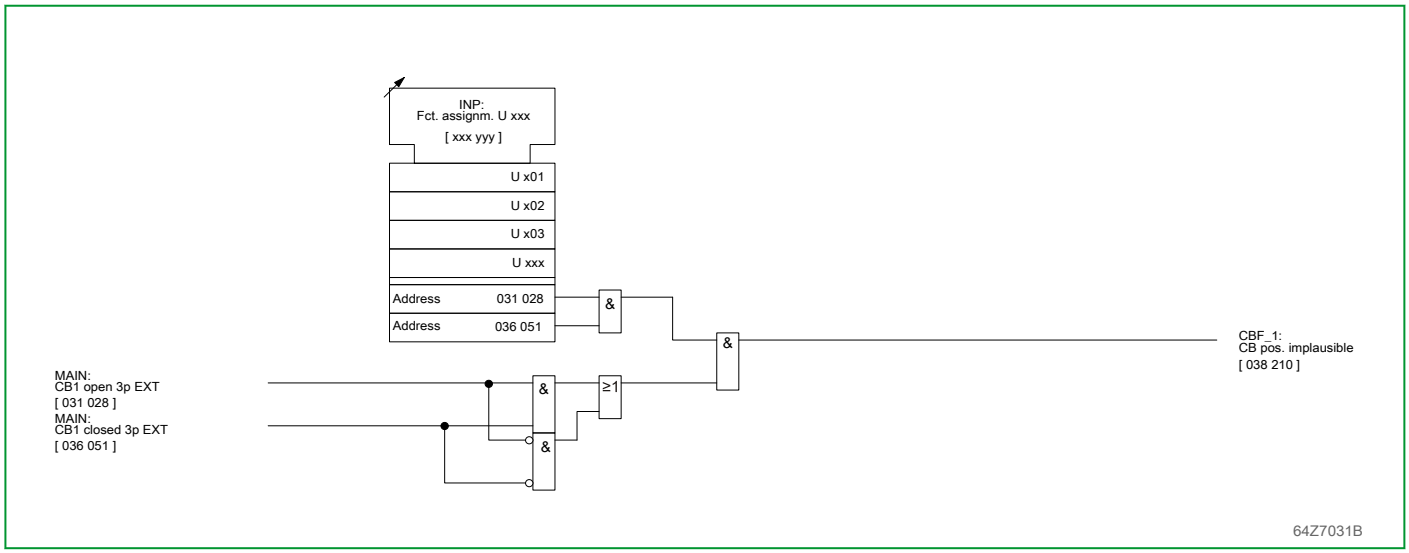

Fig. 3-174: Plausibility check of CB status signals

3.32.9 Startup Criteria

The startup of the circuit breaker failure protection function will occur when the CB is recognized as closed during a start criterion. The following startup criteria are evaluated:

- Internal startup criterion:

  Generating the specific general trip signal, which has been selected by setting parameter `CBF_1: Fct.assign. starting`, is considered a startup criterion. In addition it may be selected, by setting the parameter `CBF_1: Start with man. trip`, that a manual trip signal will also be used as a startup criterion.

- External startup criterion:

  Triggering by a protection device operating in parallel (`CBF_1: Start 3p EXT`) may be used as a startup criterion. A false CBF operation due to spurious pick-up of this binary input signal is prevented as follows:

  – If only one input signal is available as trigger, this input must be active as long as the CBF timer is running. Otherwise CBF resets as soon as the trigger input signal resets.

  – Alternatively a two-pole trigger control may be implemented by applying the additional signal `CBF_1: Start enable EXT`.

Once started from internal trigger or external two-pole inputs, the CBF function will only drop out when a successful opening has been detected from the current flow monitoring or, in some cases, when the CB signals that its contacts are open.

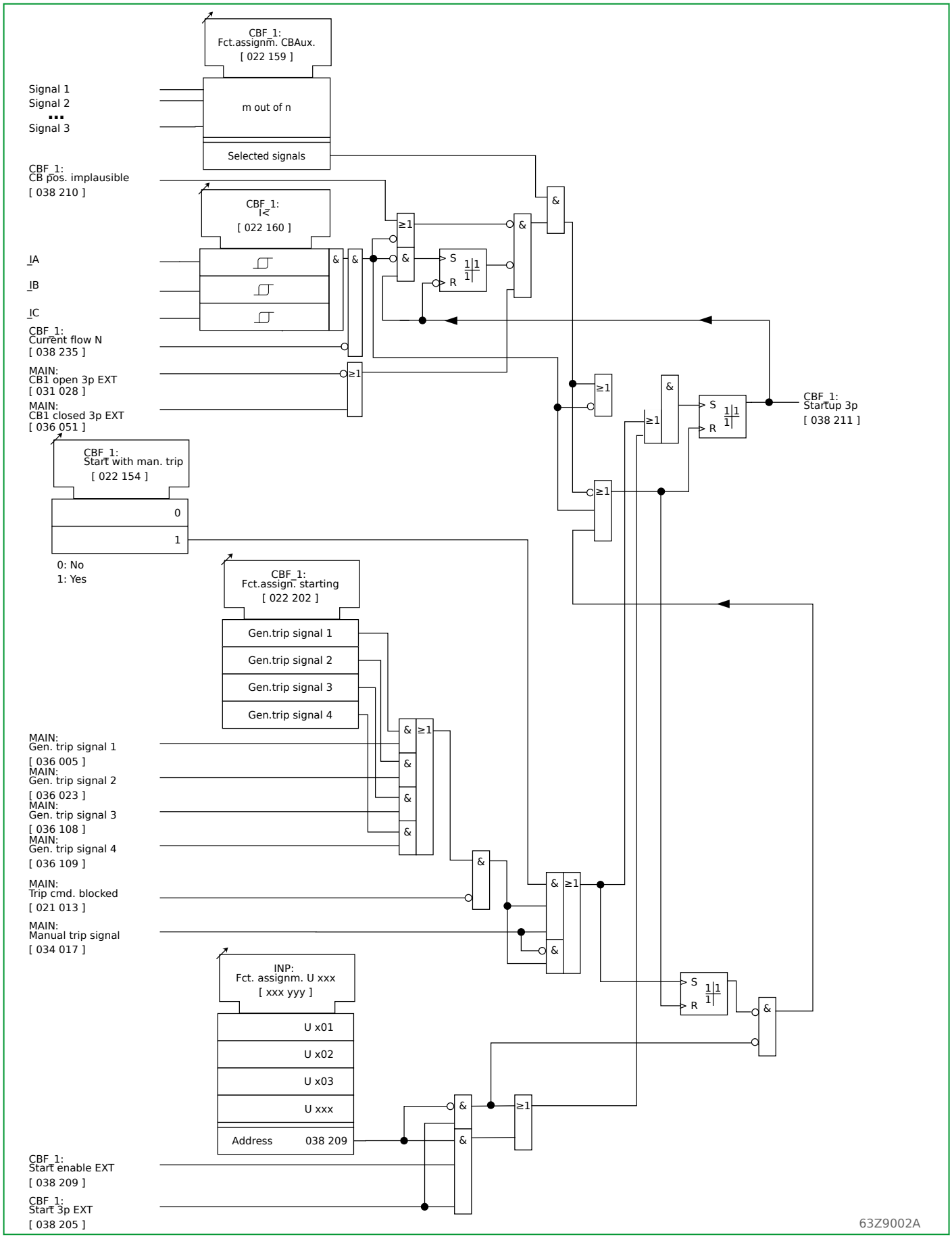

Fig. 3-175: Startup of the circuit breaker failure protection

3.32.9.1 Timers and Tripping Logic

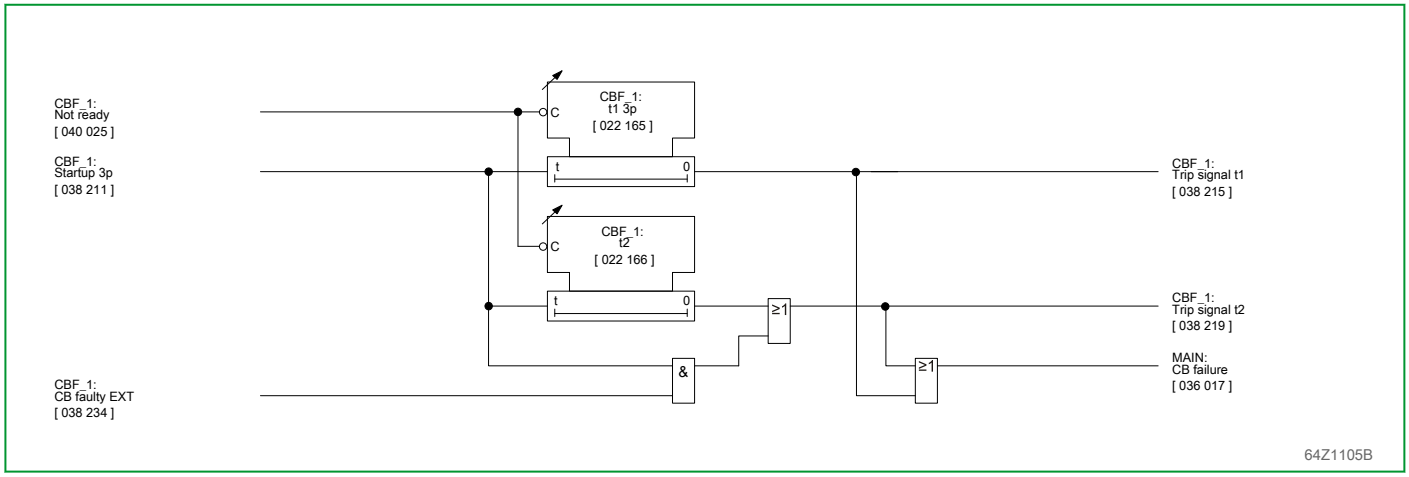

Fig. 3-176: Timer stages of the circuit breaker failure protection.

Associated timer stages are started when a startup criterion is met.

- The signal CBF_1: Trip signal t1 will be issued if the startup criterion is still present when the time delay, set at timer stage CBF_1: t1 3p, has elapsed. The output command from this timer stage is intended for a second CB trip coil.
- The signal CBF_1: Trip signal t2 will be issued if the startup criterion is still present when the time delay, set at timer stage CBF_1: t2, has elapsed. The output command from this timer stage is intended for a backup circuit breaker or protection system.

These trip signals will be issued as long as the startup criteria are met.

Should a loss of gas pressure occur in the de-arcing chambers of installed type SF6 circuit breakers then all surrounding circuit breakers must be immediately tripped without waiting for a reaction from the damaged switch. In case of an external CB_1 fault the elapsing of timer stage t2 may be interrupted by a signal to the binary signal input appropriately configured at CBF_1: CB faulty EXT.

3.32.10 Trip Commands

While trip signals issued by the CB failure protection have no timer stages available the user can set minimum time delays for trip commands.

By appropriate setting it can further be determined that trip commands, issued by the CB failure protection, will operate in latching mode. The respective trip command, set to latch mode, will remain active until reset by operating parameters or through an appropriately configured binary signal input.

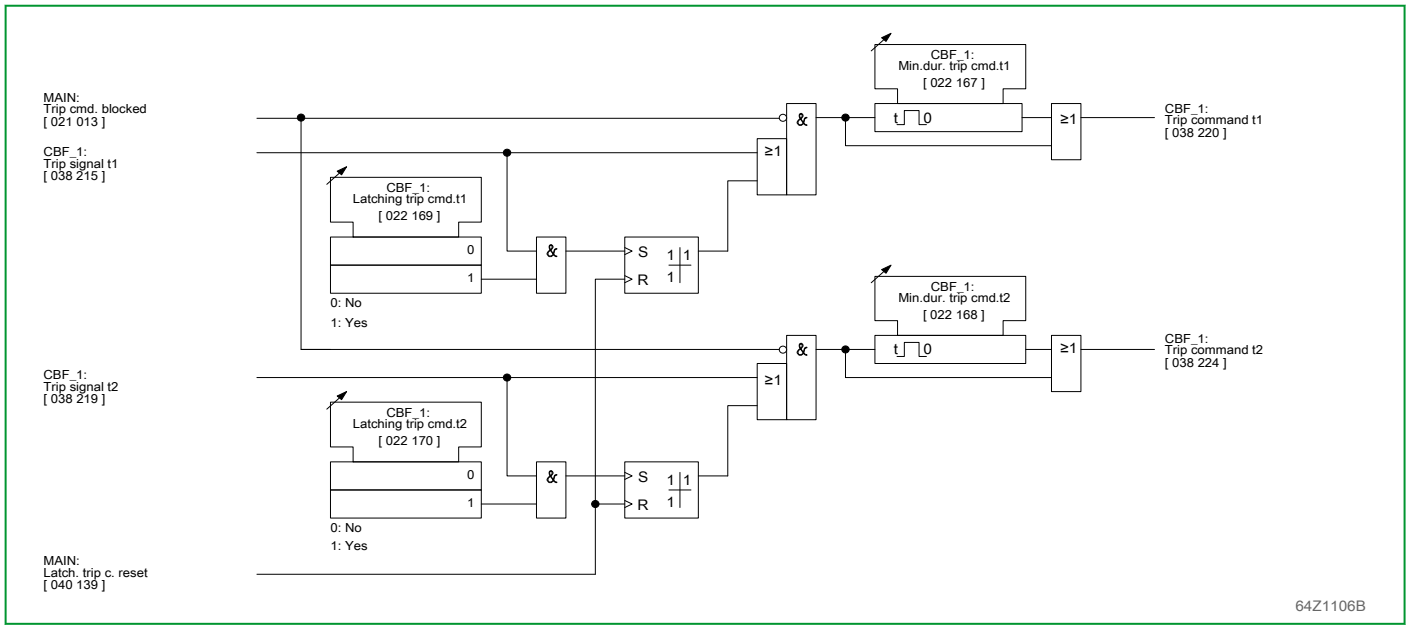

Fig. 3-177: Trip commands, issued by the CB failure protection

3.32.11 Starting Trigger

Should a downstream CB fail, a trip can be issued by the CB failure protection function. In this case the dedicated general interrogation is checked as a condition so as to guarantee increased security against overreaction.

The signal CBF_1: Starting will be issued when the signal CBF_1: Starting trig. EXT is presented to an appropriately configured binary signal input and a general starting is present. The signal CBF_1: Trip signal will be issued after timer stage CBF_1: Delay/starting trig. has elapsed.

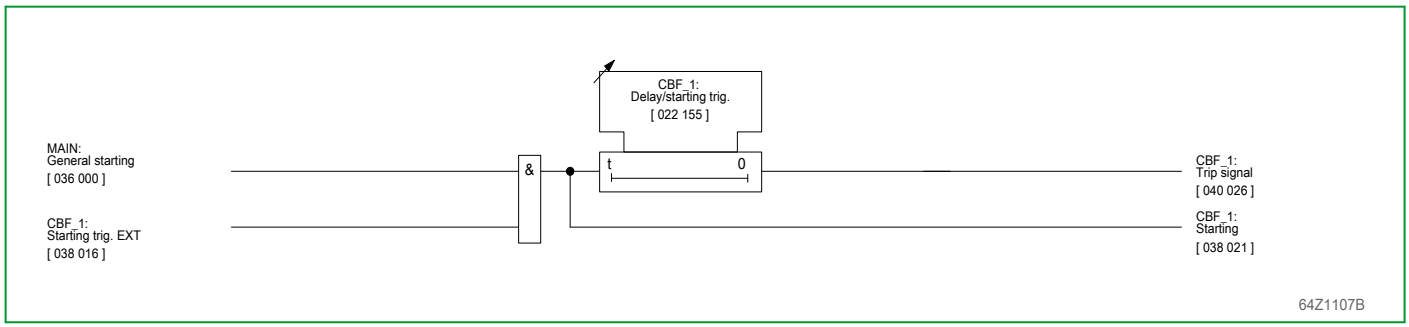

Fig. 3-178: Starting trigger

3.32.12 Fault Behind CB Protection

A fault behind a CB (downstream) is a fault that may occur between a circuit breaker already open and a CT, which is fed from the remote end.

Fault behind CB protection recognizes such faults through the current criterion, if the circuit breaker does not provide a signal from its auxiliary contacts that it is closed after the time delay set at CBF_1: Delay/fault beh. CB has elapsed.

When such a fault behind CB is recognized the signal CBF_1: Fault behind CB is issued. In such a case the far end circuit breaker may be triggered by an InterMiCOM teleprotection interface. This may also prevent an unwanted triggering of the circuit breaker failure function.

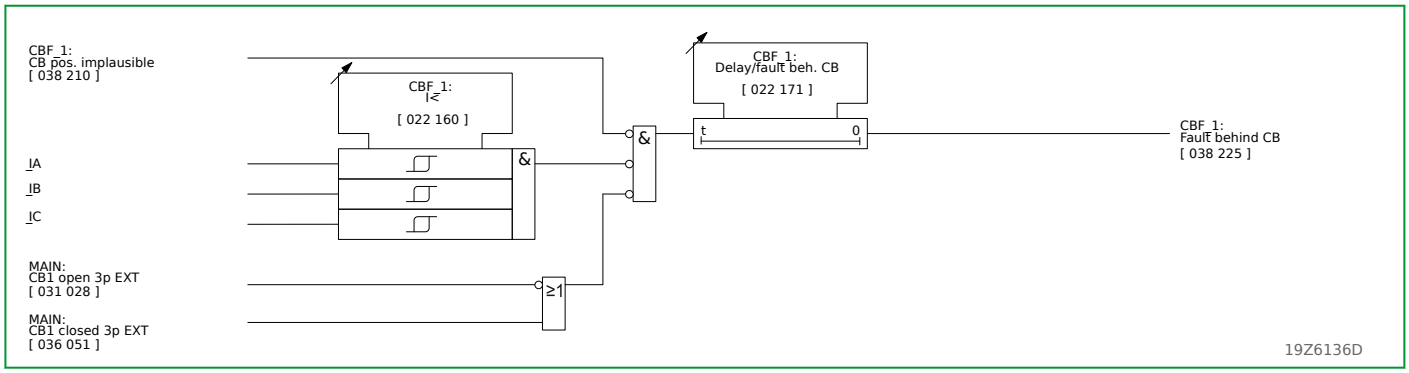

Fig. 3-179: Fault behind CB protection

3.32.13 CB Synchronization Supervision

CB synchronization supervision recognizes states where not all circuit breaker contacts are open or closed. This function uses both current flow monitoring and evaluation of CB status signals to detect CB synchronization. In order to bridge CB operate times the time delay CBF_1: Delay/CB sync.superv can be used. When this time delay has elapsed the signal CBF_1: TripSig CBsync.super is issued. Poles that are recognized as being ‘open’ will still be signaled.

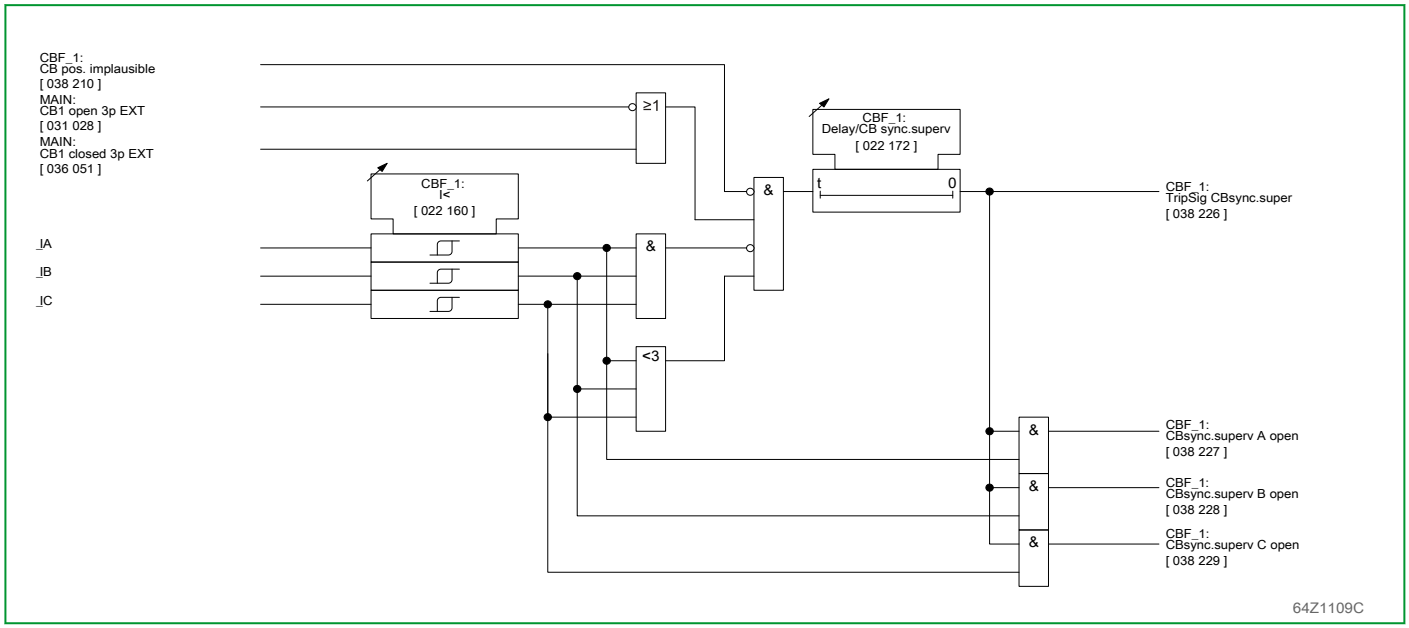

Fig. 3-180: CB synchronization supervision

3.33 Limit Value Monitoring (Function Group LIMIT)

The limit value monitoring function (LIMIT) monitors measured values which have been obtained from the analog measured data inputs.

3.33.1 Enabling or Disabling the Limit Value Monitoring Function

The limit value monitoring function can be disabled or enabled via setting parameters.

3.33.2 Monitoring the Linearized Measured DC Values

The direct current, linearized by the analog measured data input, is monitored by two stages to determine if it exceeds or falls below set thresholds. If any of the measured values exceed or fall below the thresholds then a signal is issued after the associated time-delay has elapsed.

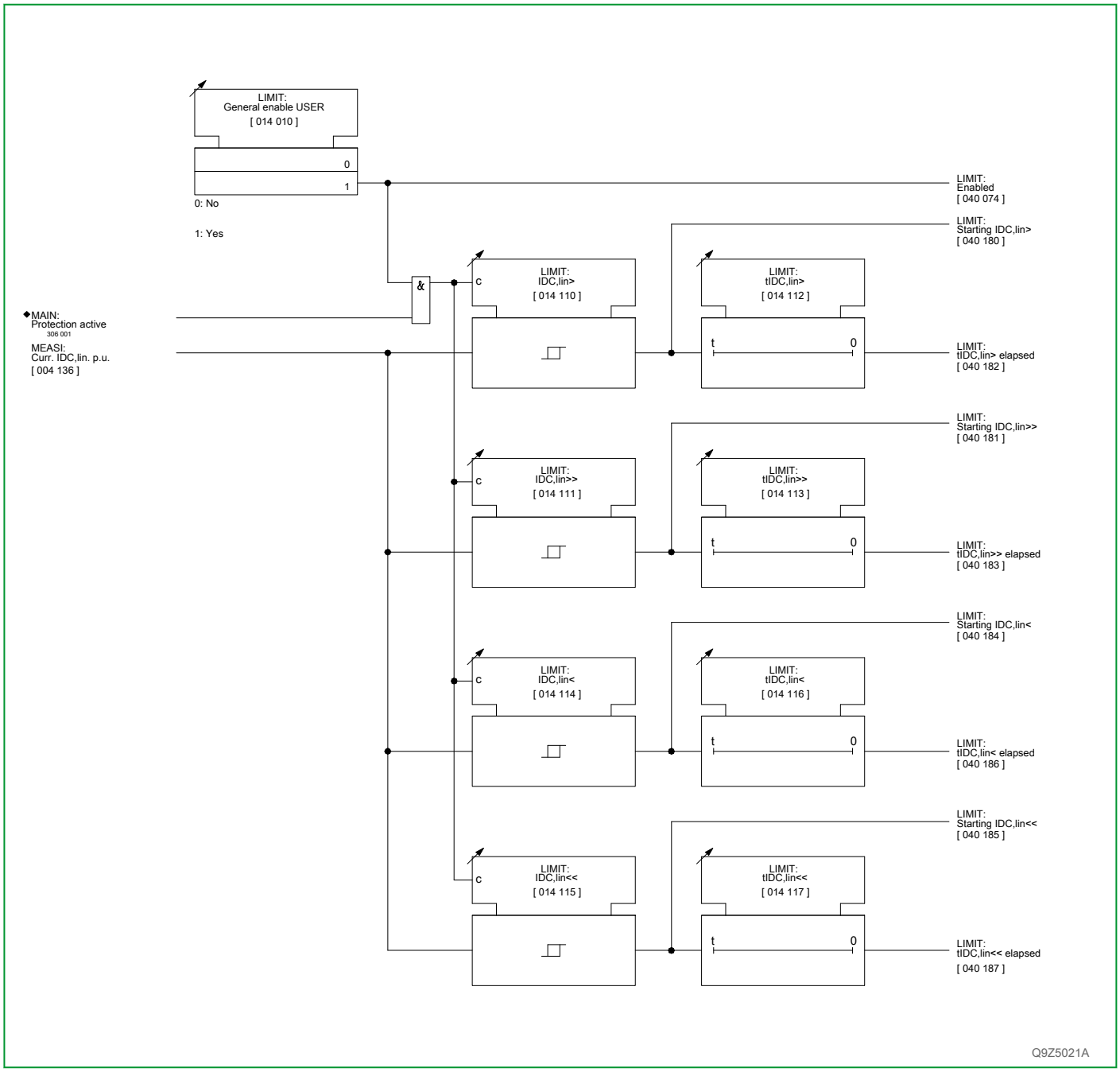

Fig. 3-181: Monitoring the linearized measured DC values

3.33.3 Monitoring the Measured Temperature Value

The temperature that is measured by the P633 using a resistance thermometer is monitored by two stages to determine if it exceeds or falls below set thresholds. If it exceeds or falls below the thresholds, a signal is issued once a set time-delay has elapsed.

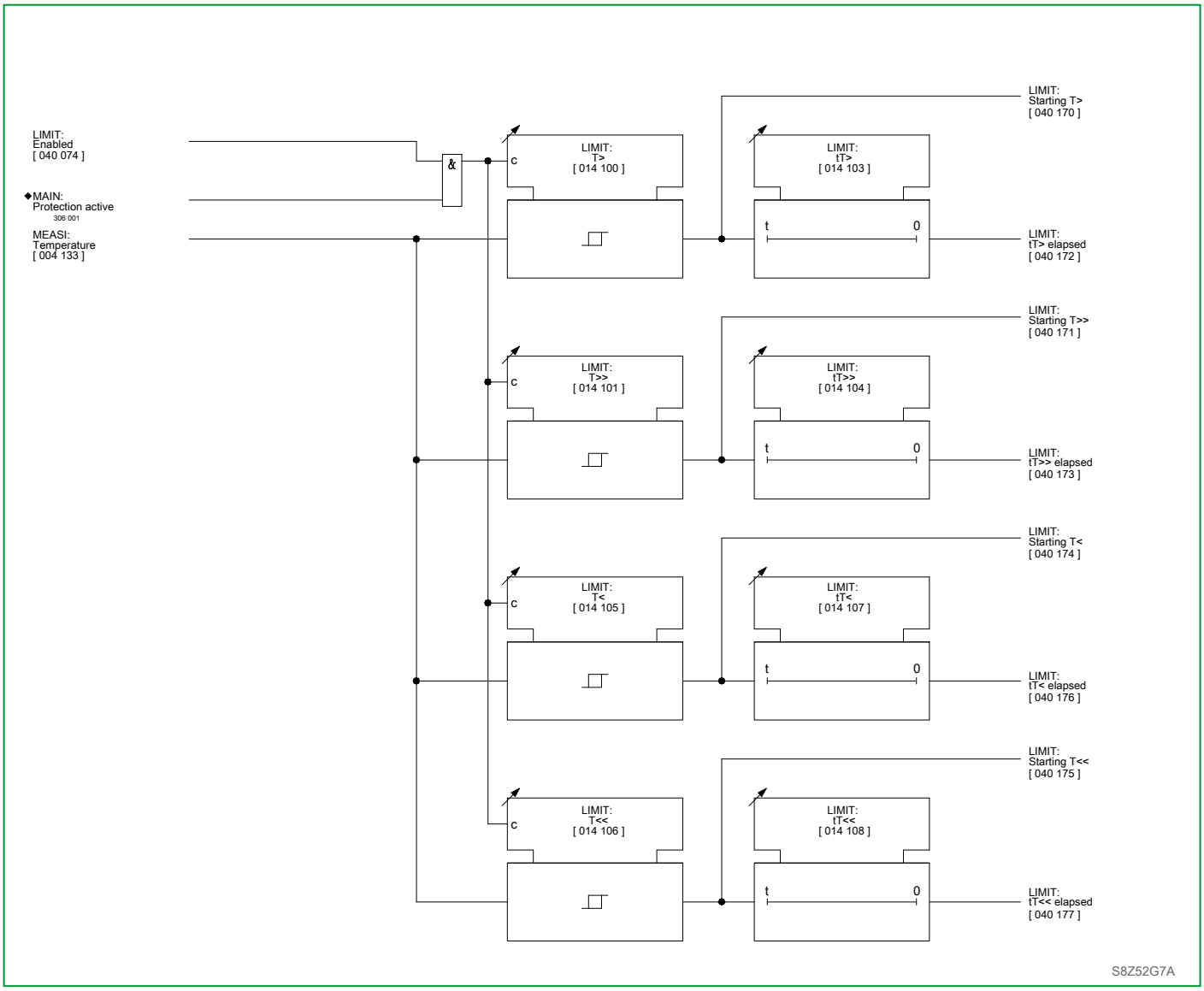

Fig. 3-182: Monitoring the measured temperature value

3.34 Limit Value Monitoring (Function Groups LIM_1 to LIM_3)

Each of the limit value monitoring functions, LIM_1, LIM_2 and LIM_3, is designed for the monitoring of the minimum and maximum phase currents for a user-selected transformer end.

The limit value monitoring functions can be enabled or disabled using setting parameters.

3.34.1 Monitoring Minimum and Maximum Phase Currents

Three limit value monitoring functions (LIM_1, LIM_2 and LIM_3) are implemented. These can each be assigned to one of the transformer ends (a, b, c) or to the virtual transformer end formed by current summation over two user-selected transformer ends.

For each limit value monitoring function, a setting parameter is provided for this assignment by the user. The function will then monitor the minimum and maximum phase currents for the selection. If a maximum phase current exceeds the relevant set threshold or if a minimum phase current falls below the relevant set threshold, a signal is issued once a set time has elapsed.

Function group LIM_1 will serve as an example to illustrate the operation of the limit value monitoring functions in the following figures.

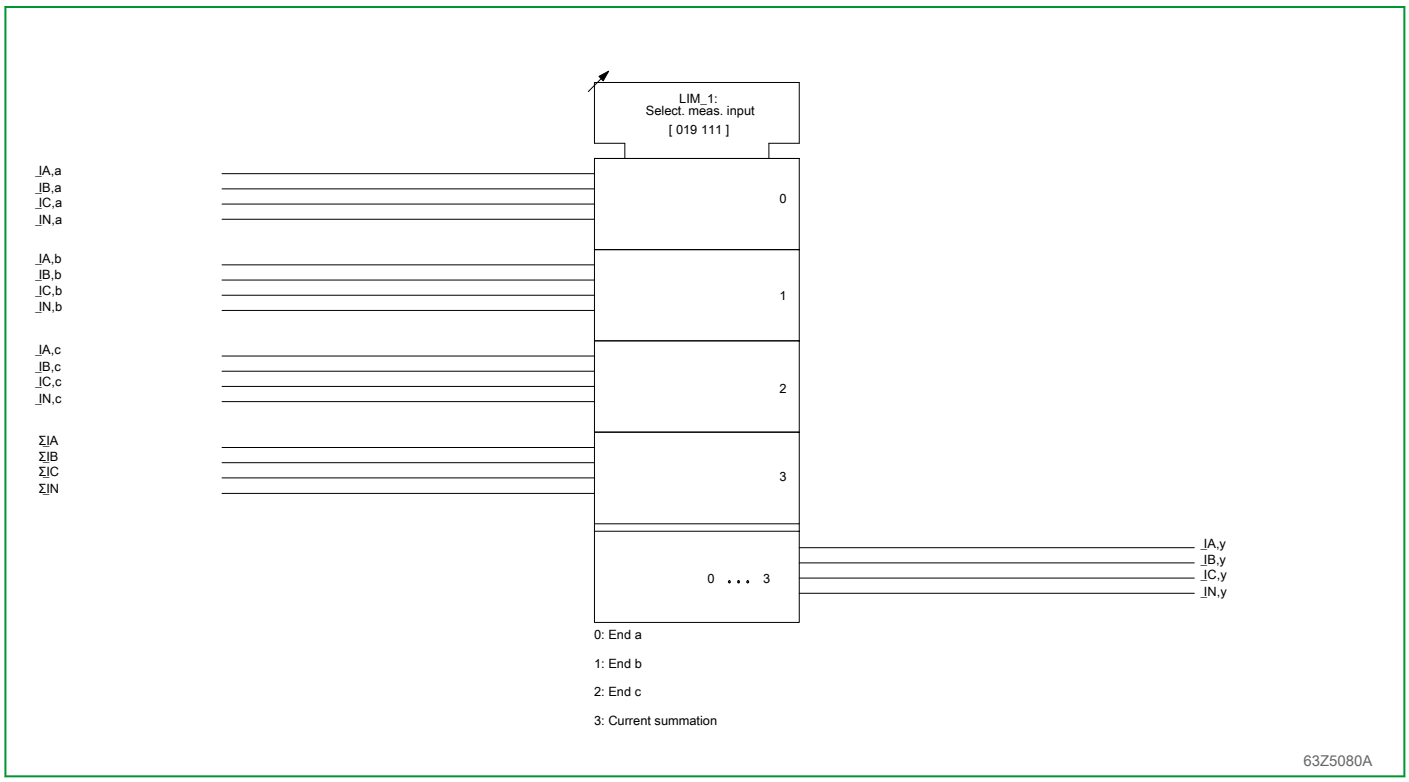

Fig. 3-183: Selection of measured values

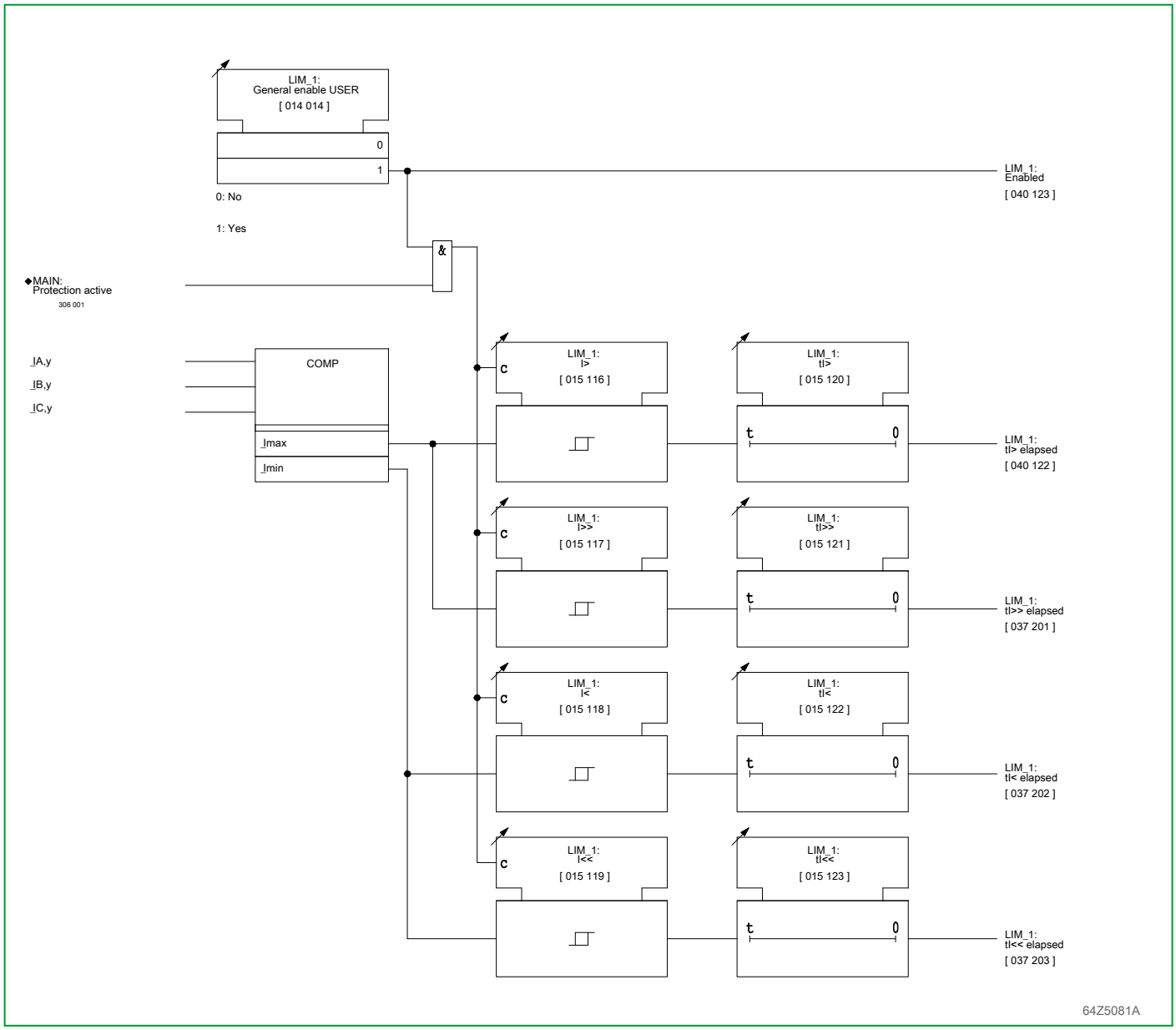

Fig. 3-184: Limit value monitoring of minimum and maximum phase current

3.35 Transformer Monitoring (Function Group TRMON)

Big transformers are usually fitted with one or more Buchholz relays.

A Buchholz relay detects gases that arise due to normal ageing processes of the transformer insulation. After a sufficient amount of gas has accumulated, the alarm contact is activated. This measurement principle has the effect that the alarm is also activated if the filling level of the insulating oil sinks below the mounting place of the Buchholz relay due to a leakage. Since in such a case the filling level sinks quite rapidly, it is common to have a separate detection hardware for this, which then issues an insulation alarm.

Additionally, a Buchholz relay monitors the rate of oil flow. In case of an inner short-circuit fault gas arises from the fault location, and the gas pushes some part of the insulating oil into the equalizing tank. The Buchholz relay reacts to this by closing its release contact.

The number of such relays mounted at the transformer is dependent on the size and construction details (e. g. 3-phase or three single-phase transformers, with or without tap changers, etc.)

The P633 features dedicated input signals for determining the alarm and triping signals of up to 3 Buchholz- / insulation monitoring relays. The P633 records these input signals, issues them via the communication interfaces or converts them to user-defined signals and / or trip commands.

It is recommended with respect to a safe transformer protection that a Buchholz trip always directly opens the circuit breaker. This means that routing the Buchholz trip to the P633 is advisable only for reporting purposes, or for triggering a second, independent tripping system.

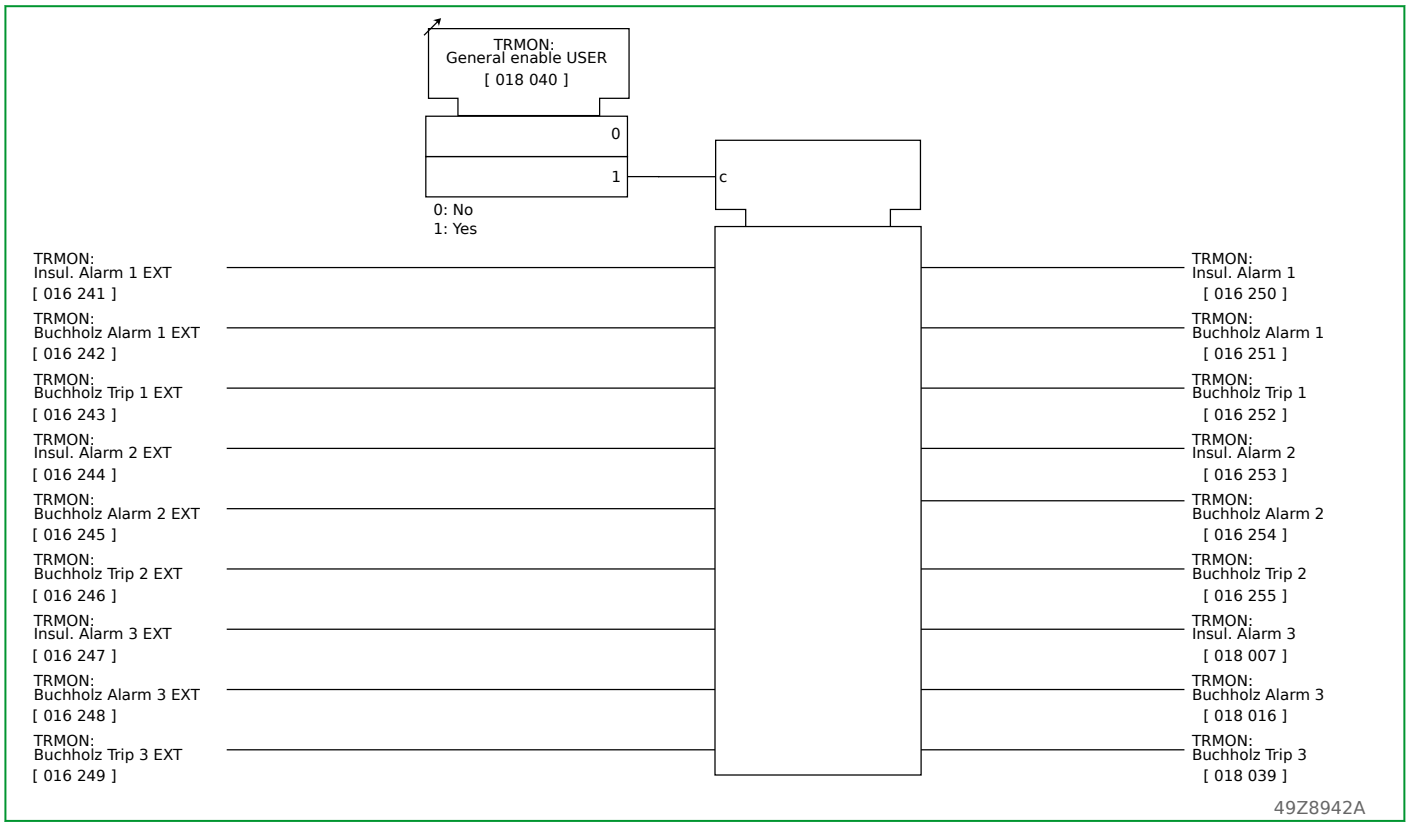

Fig. 3-185: TRMON transformer monitoring: Enabling, disabling and signals.

3.36 Programmable Logic (Function Groups LOGIC and LOG_2)

Programmable (or user-configurable) logic enables the user to link binary signals within a framework of Boolean equations.

Two function groups for programmable logic are available, that can be used independently of each other. There are only two differences between these two function groups:

- LOGIC offers 128 logical equations.

  LOG_2 offers only 4 logical equations.
- On the other hand, LOG_2 features long-term timers.

  For example for output 1:
  - LOGIC: Time t1 output 1 and LOGIC: Time t2 output 1: settable from 0 to 600 s.
  - LOG_2: Time t1 output 1 and LOG_2: Time t2 output 1: settable from 0 to 60,000 s.

The following description concentrates on the function group LOGIC. Where applicable, any differences to LOG_2 are mentioned.

Binary signals in the P633 may be linked by logical “OR” or “AND” operations with the option of additional NOT operations by setting LOGIC: Fct.assignm. outp. 1 (or LOGIC: Fct.assignm. outp. 2 to LOGIC: Fct.assignm.outp. 128, or LOG_2: Fct.assignm. outp. 1 to LOG_2: Fct.assignm. outp. 4). The Boolean equations need to be defined without the use of brackets. The following rule applies to the operators: “NOT” before “AND” before “OR”.

A maximum of 32 elements can be processed in one Boolean equation. In addition to the signals generated by the P633, initial conditions for governing the equations can be set using setting parameters, through binary signal inputs, or through the serial interfaces.

Logical operations of the function group LOGIC can be controlled through the binary signal inputs in different ways.

The binary input signals LOGIC: Input 01 EXT (or LOGIC: Input 02 EXT, ..., LOGIC: Input 40 EXT) have an updating function, whereas the input signals LOGIC: Set 1 EXT (or LOGIC: Set 2 EXT, ..., LOGIC: Set 8 EXT) are latched. The logic can only be controlled from the binary signal inputs configured for LOGIC: Set 1 EXT if the corresponding reset input LOGIC: Reset 1 EXT) has been configured for a binary signal input. If only one or neither of the two functions is configured, then this is interpreted as “Logic externally set”. If the input signals of the two binary signal inputs are implausible (such as when they both have a logic value of “1”), then the last plausible state remains stored in memory. (For LOG_2, there are no such parameters for assigning binary input signals.)

⚠ WARNING

HAZARD OF UNINTENDED EQUIPMENT OPERATION

- When using the programmable logic, it is necessary to carry out a functional type test to conform with the requirements of the relevant protection/control application. In particular, it is necessary to verify that the requirements for the implementation of logic linking (by setting) as well as the time performance during startup of the P633, during operation and when there is a fault (blocking of the P633) are fulfilled.

Failure to follow these instructions can result in unintended equipment operation.

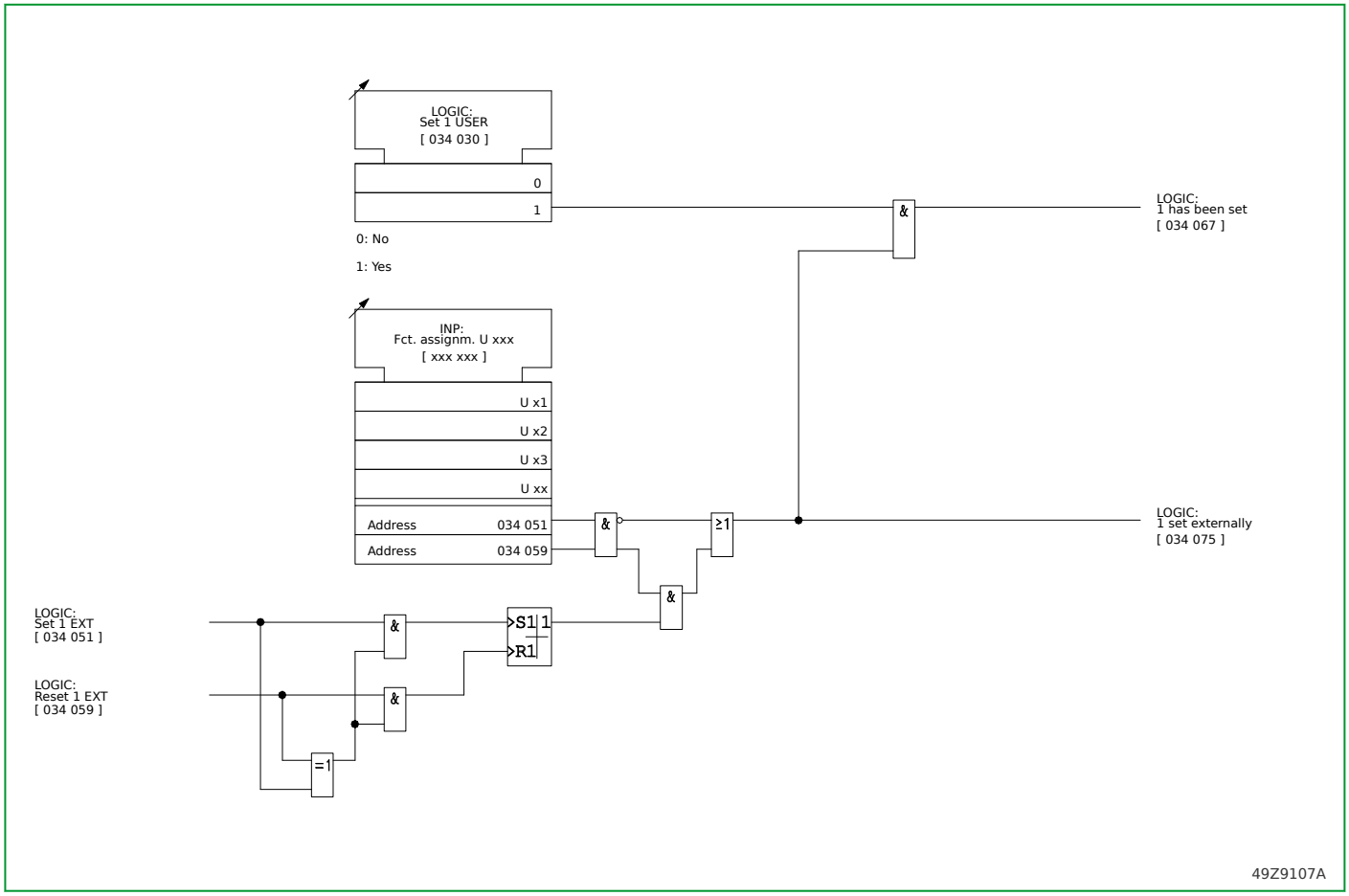

Fig. 3-186: Control of logic operations via setting parameters or stored input signals. (The logic does not apply to LOG_2.)

The LOGIC: Trigger 1 signal is a “triggering function” that causes a 100 ms pulse to be issued.

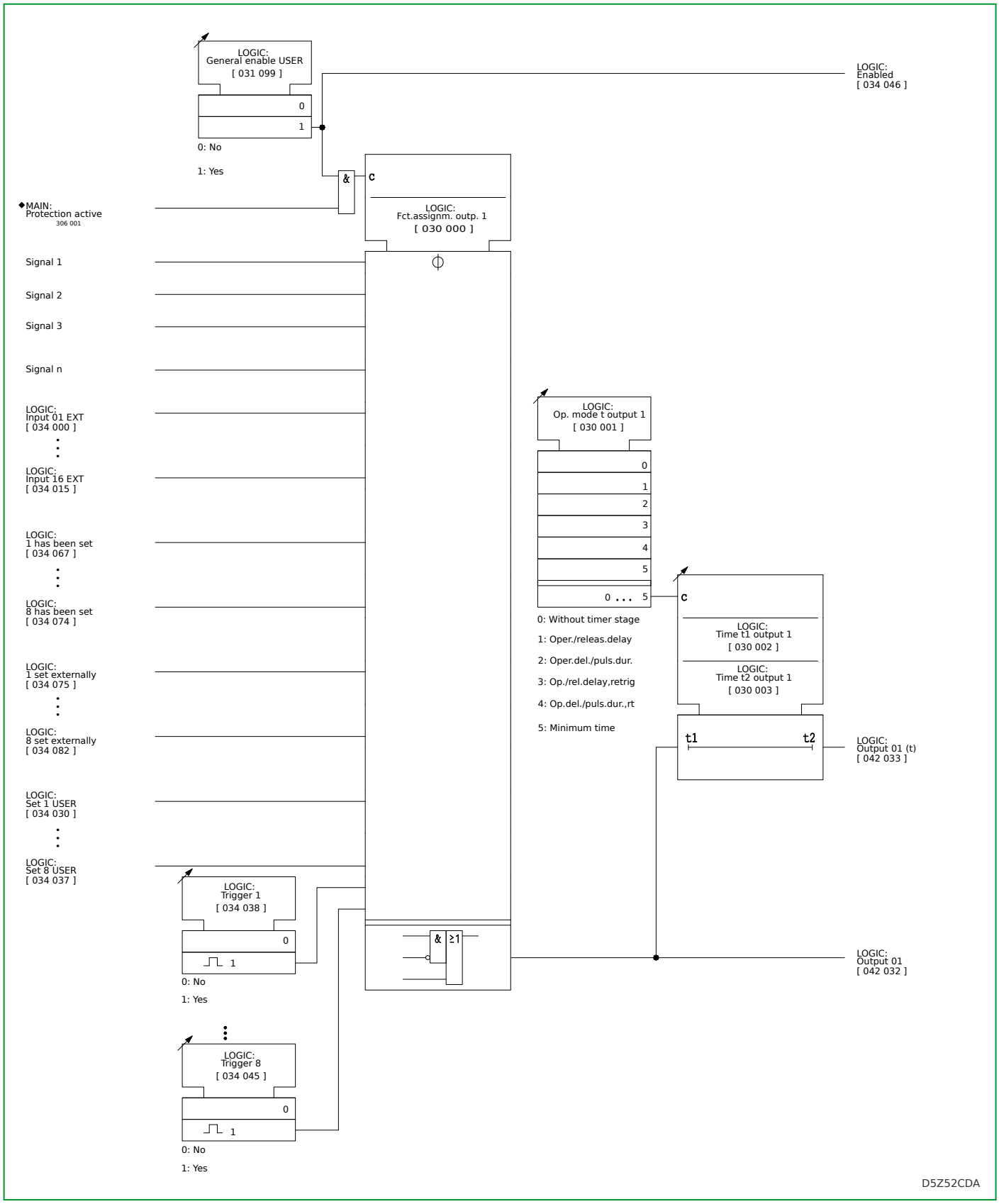

Fig. 3-187: Setting options for programmable logic, function group LOGIC (shown here for output 1).

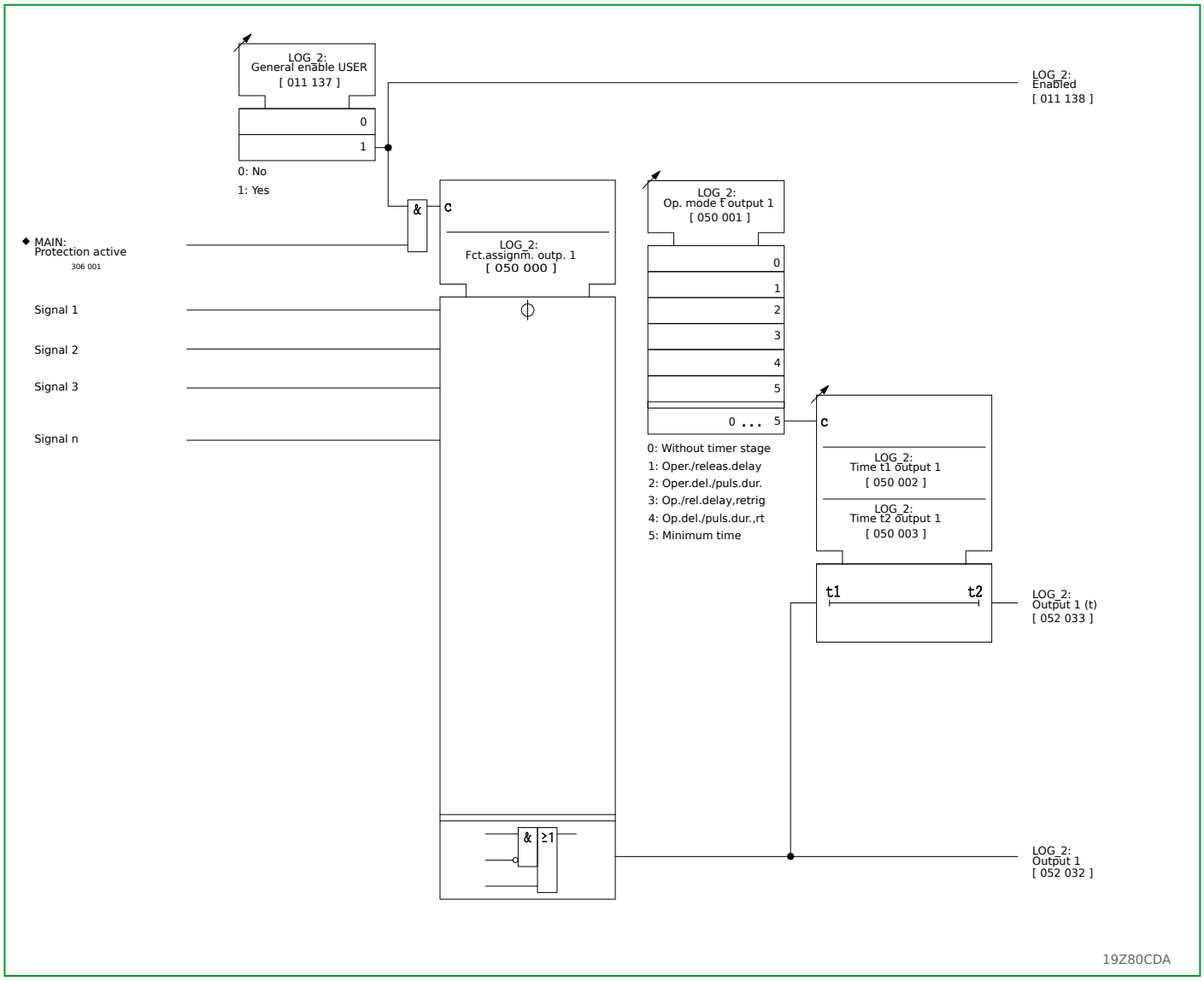

Fig. 3-188: Setting options for programmable logic, function group LOG_2 (shown here for output 1).

The output signal of an equation can be fed into a further, higher order, equation as an input signal thus creating a sequence of interlinked Boolean equations. The equations are processed in the sequence defined by the order of each equation. It should be noted that in the case of overlapping equations, the result is provided by the equation with the highest order.

The output signal of each equation is fed to a separate timer stage with two timer elements and a choice of operating modes. This offers the possibility of assigning a freely configurable time characteristic to the output signal of each Boolean equation. In the *Minimum time* operating mode, the setting of timer stage t2 has no effect. The following diagrams (Fig. 3-189, (p. 3-238) to Fig. 3-193, (p. 3-240)) show the time characteristics for the various timer stage operating modes.

If the P633 is switched to offline the equations are not processed and all outputs are set to the “0” logic level.

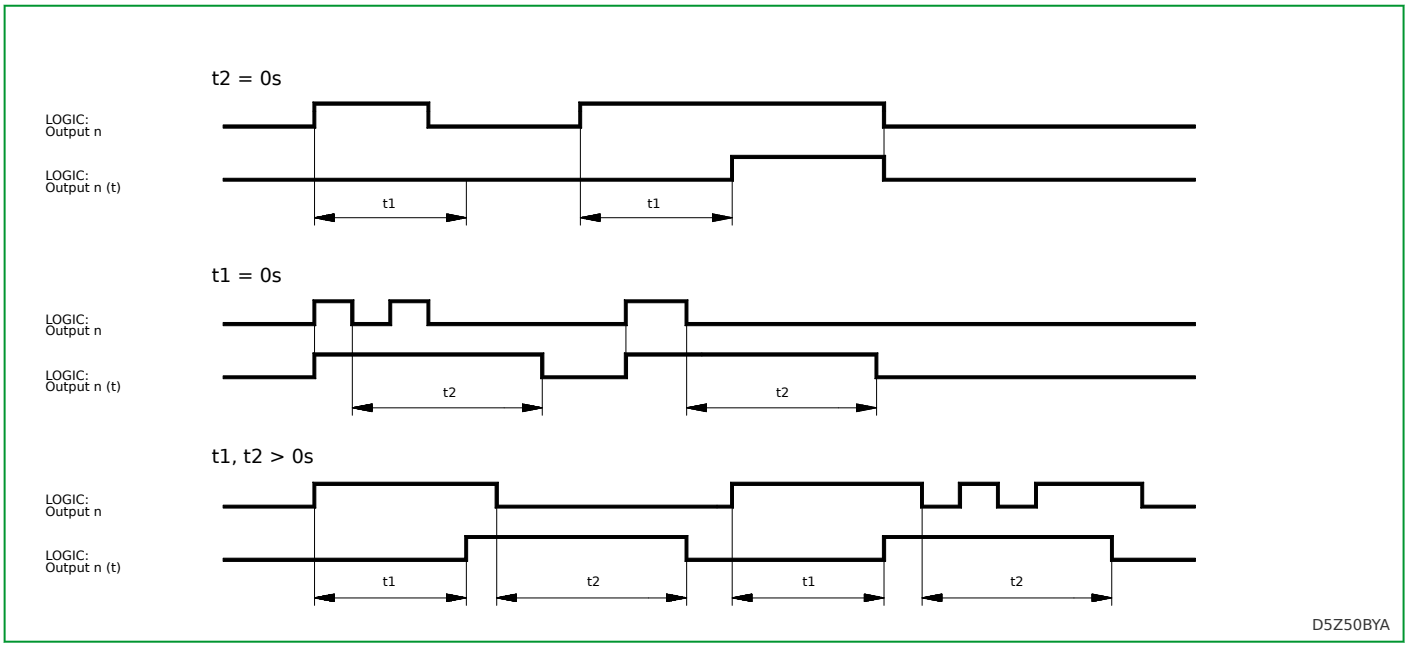

Fig. 3-189: Operating mode 1: Pickup/reset delay (Oper./releas.delay). (This diagram is also valid for LOG_2, if the signal parameters are replaced by the corresponding ones from LOG_2 .)

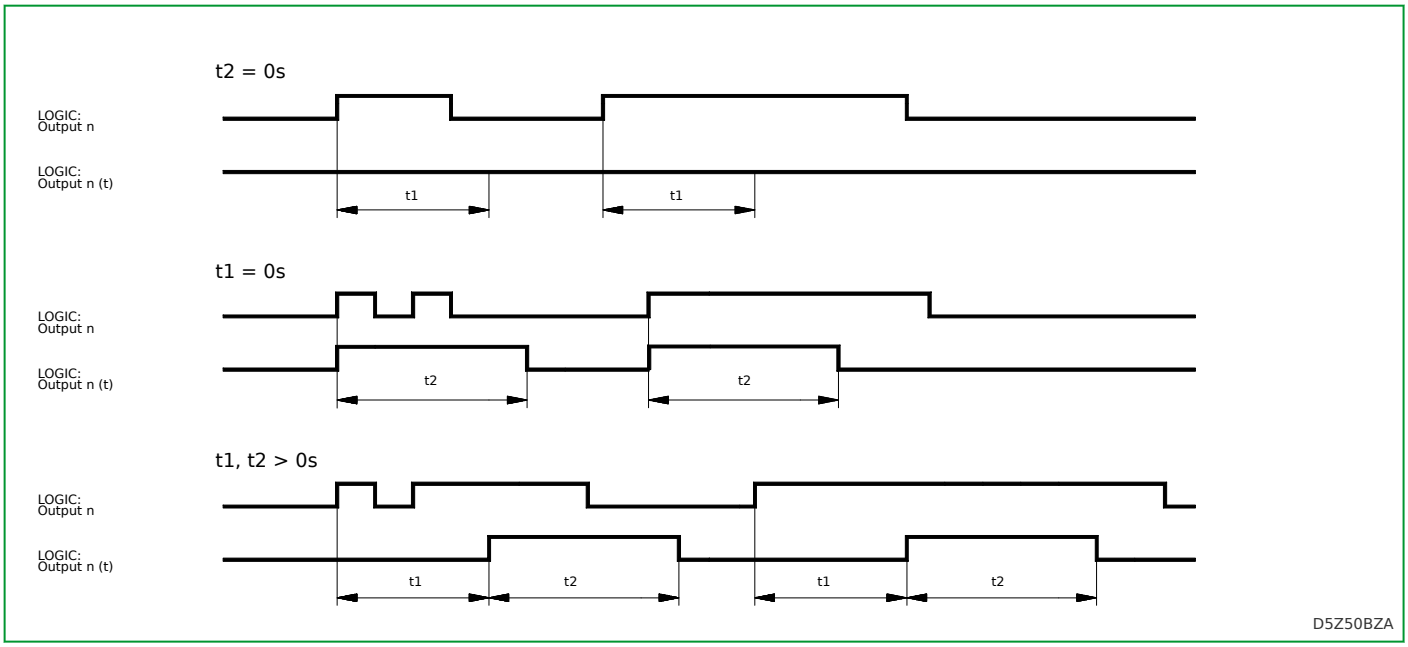

Fig. 3-190: Operating mode 2: Pulse, delayed pickup (Oper.del./puls.dur.). (This diagram is also valid for LOG_2, if the signal parameters are replaced by the corresponding ones from LOG_2 .)

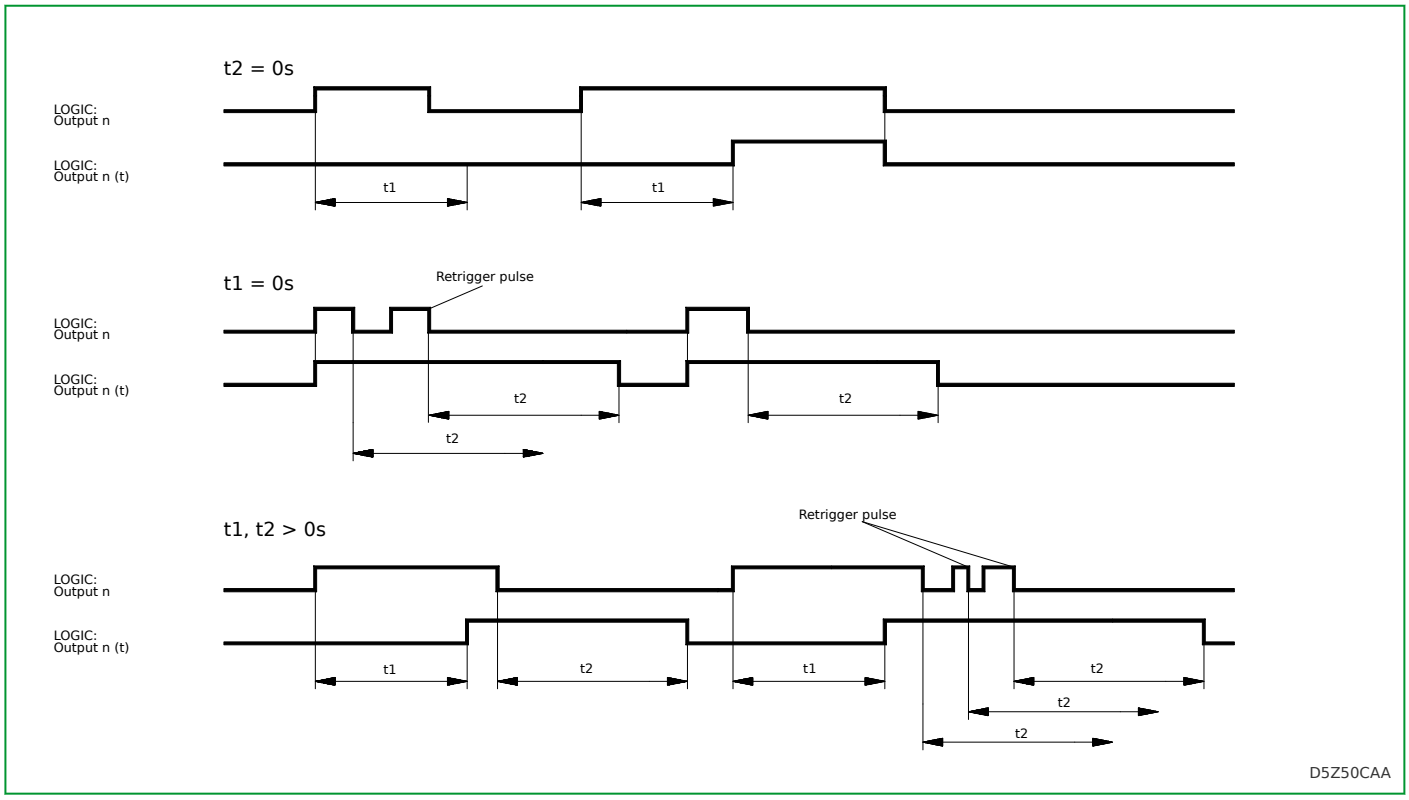

Fig. 3-191: Operating mode 3: Pickup/reset delay, retriggerable (Op./rel.delay,retrig). (This diagram is also valid for LOG_2, if the signal parameters are replaced by the corresponding ones from LOG_2 .)

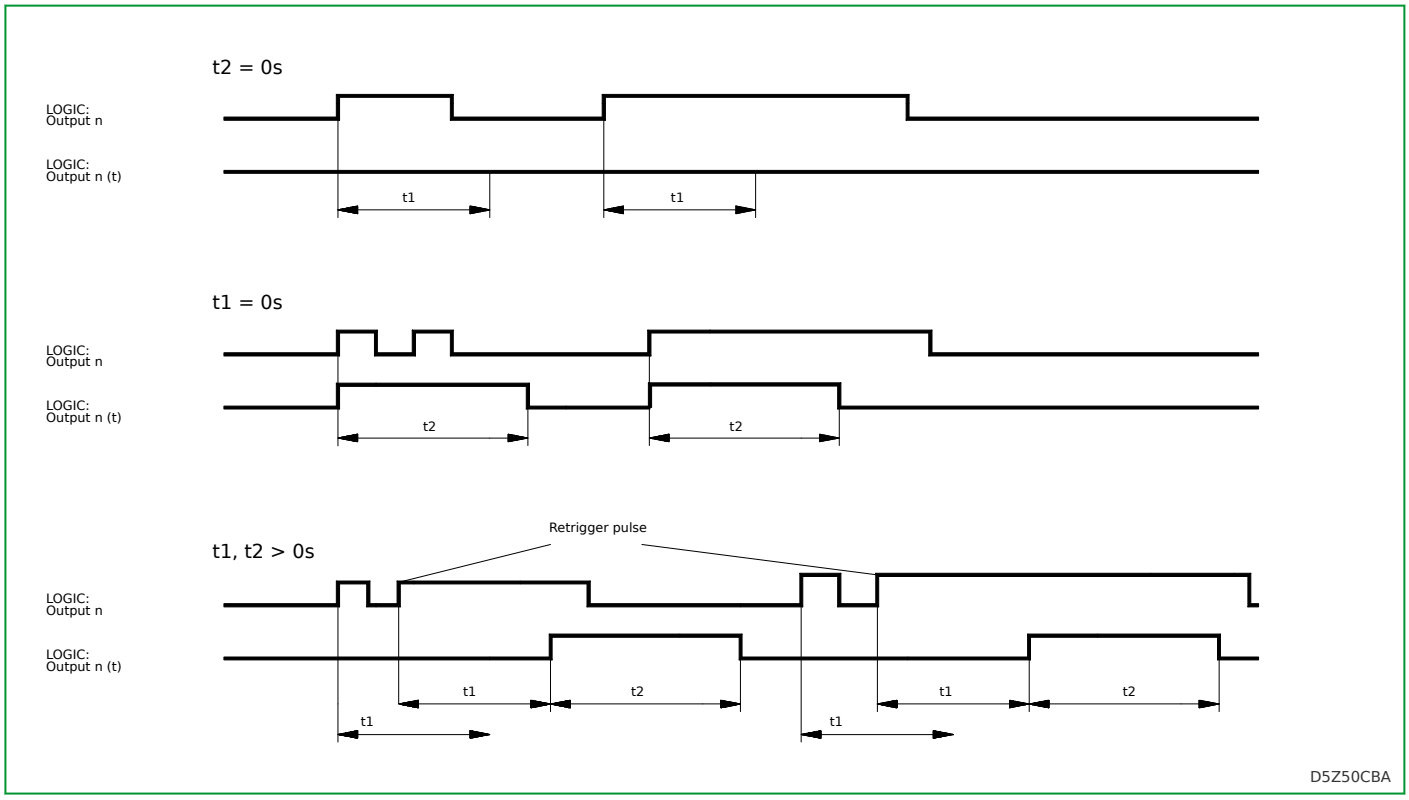

Fig. 3-192: Operating mode 4: Pulse, delayed pickup, retriggerable (Op.del./puls.dur.,rt). (This diagram is also valid for LOG_2, if the signal parameters are replaced by the corresponding ones from LOG_2 .)

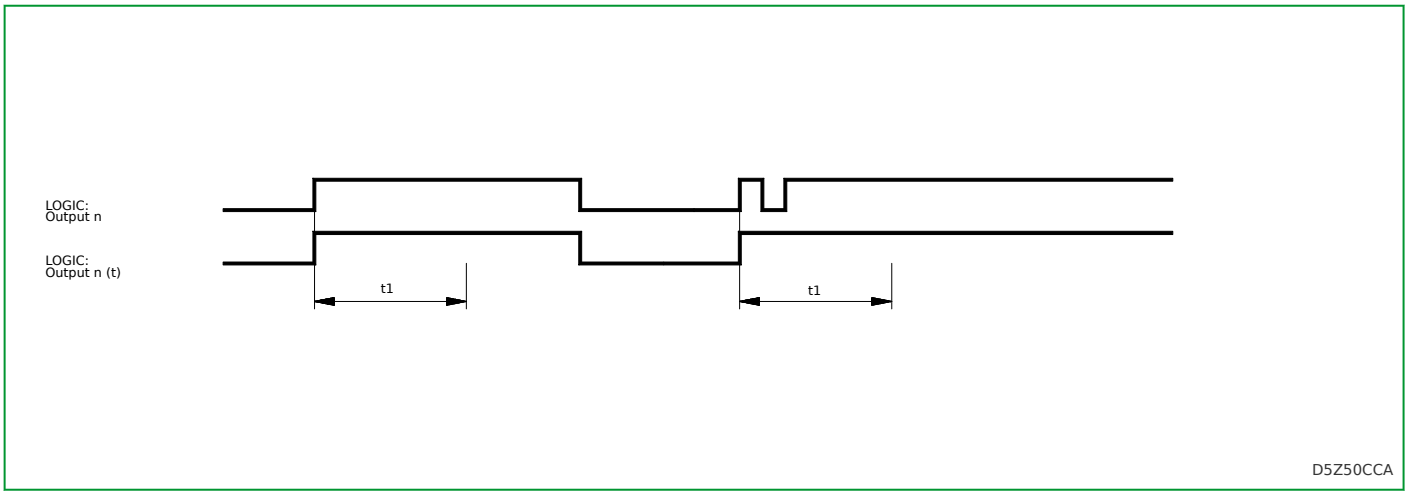

Fig. 3-193: Operating mode 5: Minimum time (Minimum time). (This diagram is also valid for LOG_2, if the signal parameters are replaced by the corresponding ones from LOG_2 .)

Through appropriate configuration, it is possible to assign the function of a binary input signal to each output of a logic operation. The output of the logic operation then has the same effect as if the binary signal input to which this function has been assigned were triggered.

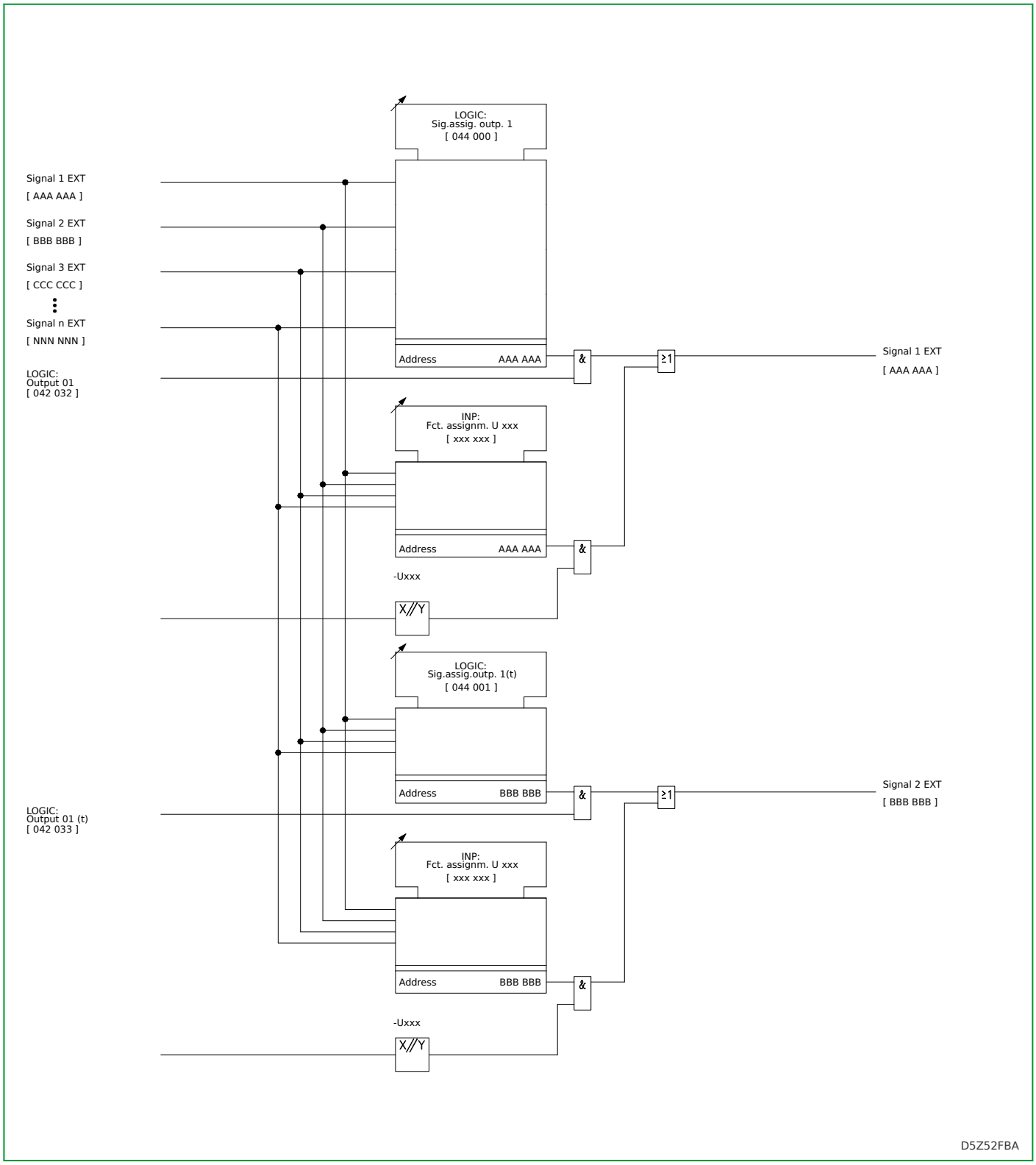

Fig. 3-194: Signal assignment to outputs of Boolean equations. (This diagram is also valid for LOG_2, if the parameters from LOGIC are replaced by the corresponding ones from LOG_2 .)

3.37 Control and Monitoring of Switchgear Units (Function Groups DEV01 to DEV03)

The P633 is designed to control up to 3 switchgear units. The two-pole forcibly guided termination contacts on the binary module X(6I 6O) are available for these.

The P633 provides a bay panel concept to simplify the configuration of the switchgear control functions. The bay panel type defines the layout of a bay with its switchgear units on the HMI, an automated I/O assignment and the system/bay interlocking equations for all required switchgear units. Vol. 2, Chapter A5, (p. A5-1) provides a description of all bay types which are pre-defined (generally for all Easergy MiCOM 30 devices) and therefore immediately available. The selection of a bay type can be done with the parameter (220 000) MAIN: Type of bay. (See Section 3.37.1, (p. 3-242) for some more information.)

3.37.1 Bay Type Selection

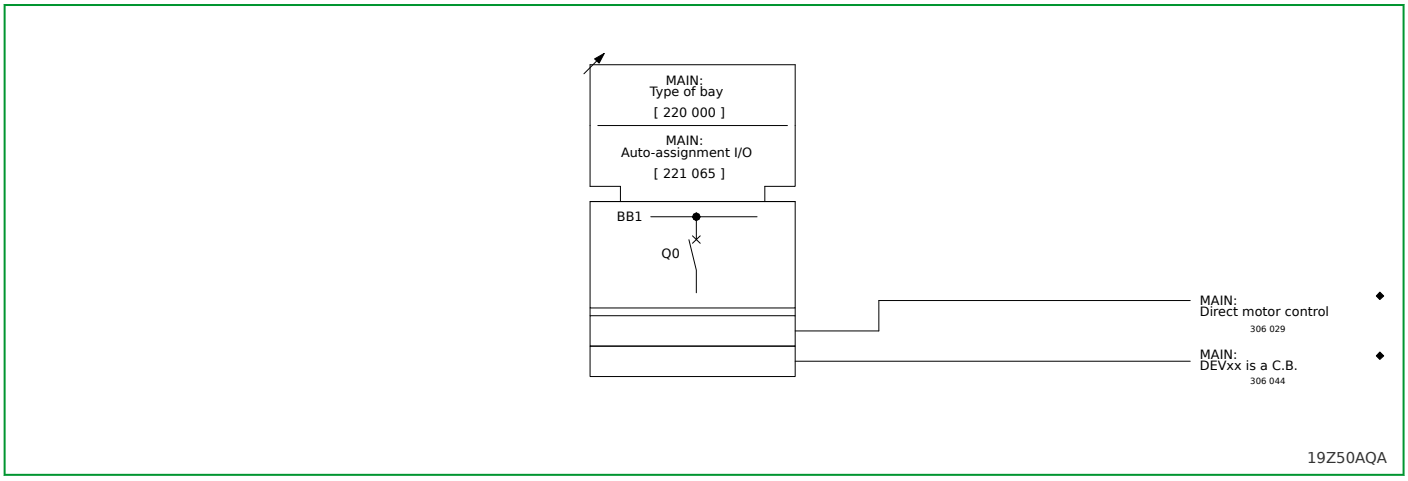

Fig. 3-195: Bay type selection.

The bay type defines the layout of a bay with its switchgear units, an automated I/O assignment and the system/bay interlocking equations for all required switchgear units. Vol. 2, Chapter A5, (p. A5-1) provides a description of all bay types, which are pre-defined (generally for all Easergy MiCOM 30 devices) and therefore immediately available.

The selection of a bay type can be done with the parameter (220 000) MAIN: Type of bay. If the user tries to select a non-existing ID, then the selection will be rejected and an error message “Signal from device: Bay type not assigned (0x8073)” will be reported in the “`kommprot.txt`” log file.

Once the user has selected a bay type, the P633 can automatically configure the binary inputs and output relays with function assignments for the control of switchgear units. This automatic assignment is defined via the parameter MAIN: Auto-assignment I/O.

The assignment of inputs and outputs for an automatic configuration is shown in the List of Bay Types (Vol. 2, Chapter A5, (p. A5-1)).

In general, the selection of a bay type (via `MAIN: Type of bay`) is accepted by the P633 only if all of the following requirements are fulfilled:

- The selected ID number is known by the P633, i. e. is available as a pre-defined standard bay type.
- A binary I/O module 6I 6O has been fitted to slot 7 (40 TE case) or 16 (84 TE case).
- The hardware (in particular the set of all binary I/O modules and power supply) has got a sufficient number of inputs and outputs as required by the selected bay type.
- Bay types with more than 3 switchgear devices are **not** supported by the P633.
- None of the inputs/outputs required by the selected bay type has been previously assigned to a non-control function.

In case of the setting `MAIN: Auto-assignment I/O` = Yes, the following two constraints must be noted:

- The activation of a new bay type overwrites all DEVxx / SIG_1 / CMD_1 assignments to I/O elements that have been previously made (for the previous bay type definition).
- If the automatic I/O assignment fails because some required inputs and outputs have been assigned to a non-control function, or because the number of I/O elements available is not sufficient, then the previously selected bay type remains active and an error message “Signal from device: Hardware module not fitted (0x8063)” is reported in the “`kommprot.txt`” log file.

3.37.2 Enable for Switch Commands Issued by the Control Functions

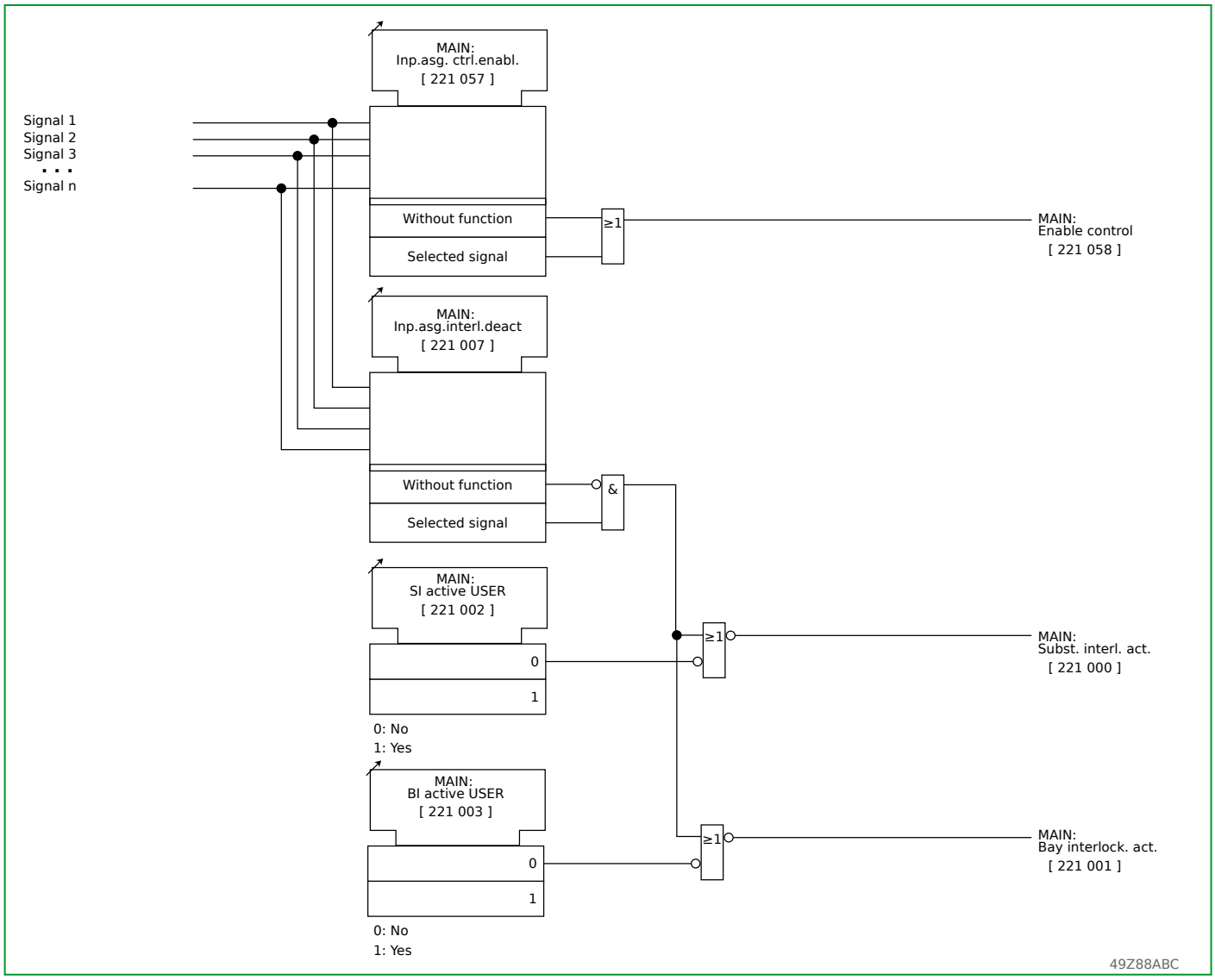

Fig. 3-196: General enable for switch commands issued by the control functions; activating or canceling the interlocks.

Before a switching unit within the bay is closed or opened by the control functions of the P633, the P633 first checks whether the switch command may be executed. A switch command will be executed if the optional control enable has been issued and the interlock conditions are met. The interlock conditions are defined in the interlocking logic for each switching unit within the bay that is subject to control actions and for each control direction (Open/Close). Different conditions are defined for the bay interlock equations to operate with or without station interlock. The check of bay or station interlock equations can be cancelled for all electrically controllable switchgear units within a bay. If the station interlock is active, it may be cancelled selectively for each switching unit and each control direction.

The bay and station interlocks may be cancelled through an appropriately configured binary signal input. This cancellation is effective for all of the operating modes "*Local*", "*Remote*" and "*Remote & Local*" (setting LOC: Fct. assign. L/R key = *R & L* <-> *L*). In other words, the functionality of the binary input for cancelling the bay and station interlocks is independent of the operating mode of the control point for switching between local and remote control.

All station interlock functionality (e.g. the parameter MAIN: SI active USER) is active and available only if a communication module (i. e. a module of type “A”) with 2 serial interfaces is fitted and either the IEC 60870-5-101 or -103 communication protocol is configured.

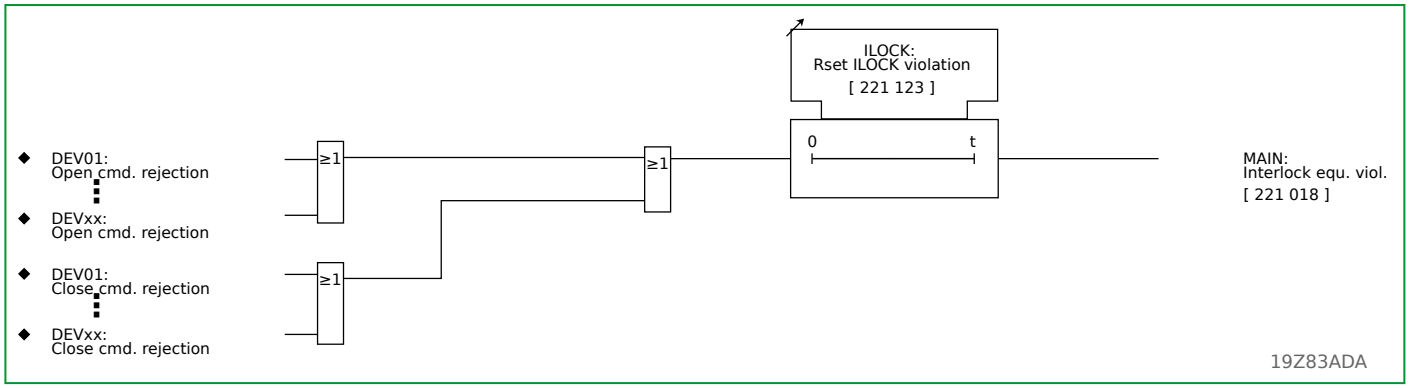

Fig. 3-197: Rejection of the switching commands.

During a switch command is being executed, any further switch command is rejected (“Double Command Lockout”). This includes interlocking of parallel switching operations and further switch commands to the currently selected switching unit.

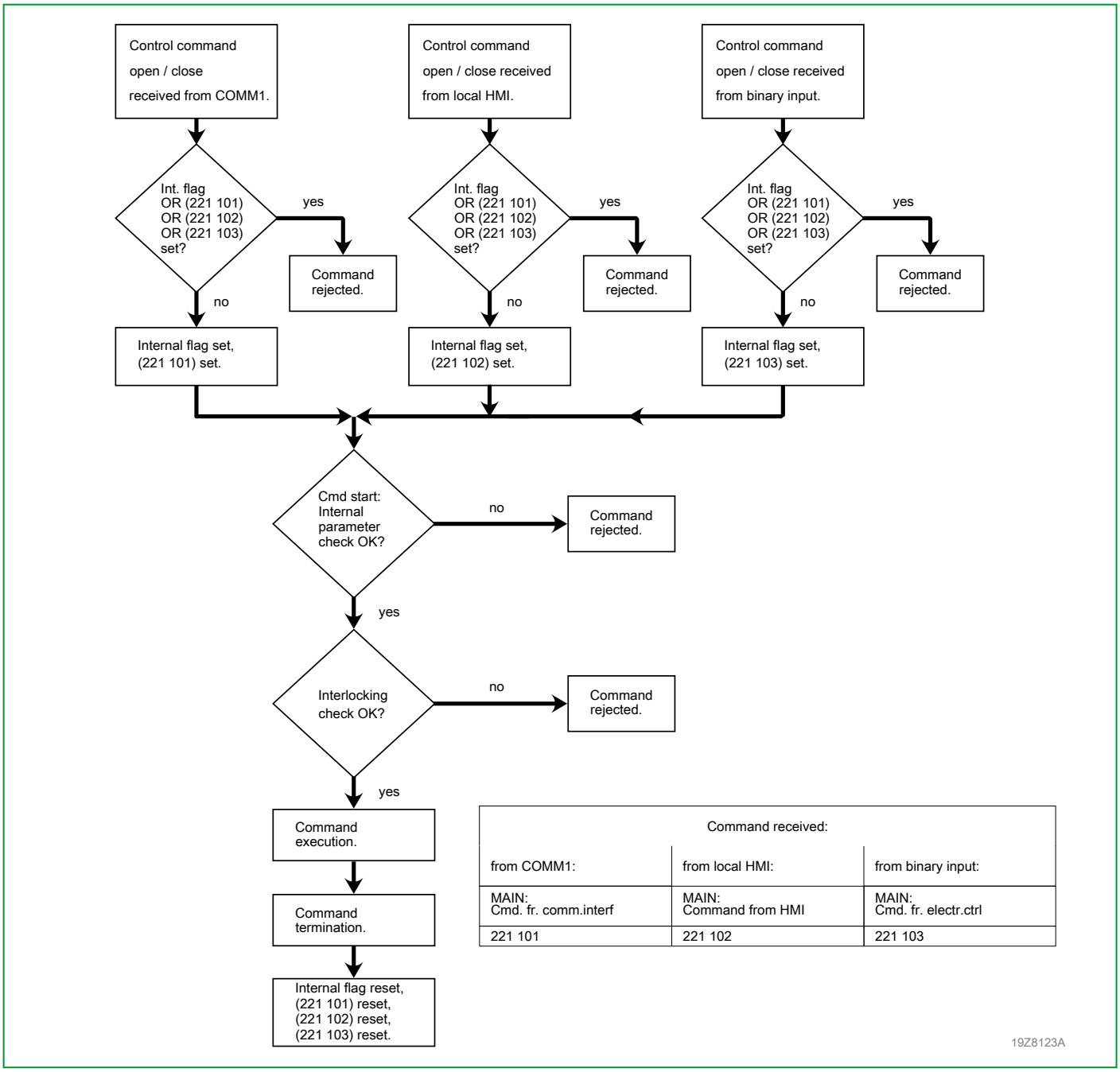

Fig. 3-198: "Double Command Lockout".

3.37.3 Designation of External Devices

Each external device represented in the Bay Panel is identified by an external device designation. The user can either select this designation from a list of over 70 pre-defined names (via the parameter DEV01: Designat. ext. dev. in case of DEV01, for example), or this parameter is set to *Device Name User*. With this selection, a user-defined text for the name of the external device will be used as the designation. This user-defined text has to be entered at DEV01: DEV-Name User (in case of DEV01, for example).

(The maximum length is 4 characters, as with the fixed identifiers. Longer text entries are truncated to 4 characters internally.)

3.37.4 Defining a Bay Panel Type

With the selection of a Bay Panel type, the following definitions are made:

- Manually operated switchgear units with status signals to be processed.
- Switchgear units to be controlled and signaled by the P633.
- The bay interlock conditions for the “Open” / “Close” command control of the switchgear units, for operation with or without the station interlock function.
- Binary inputs required for switchgear units with direct motor control.
- Binary outputs required for switchgear units with direct motor control.

When a Bay Panel type is selected, the binary inputs for switchgear status signals and the output relays for control commands are configured automatically if MAIN: Auto-assignment I/O is set to *Yes*. If set to *No*, the user will need to carry out this configuration. The list of Bay Panel types in the Appendix shows which binary inputs and output relays have been assigned signals or commands for control of switchgear units in the case of automatic configuration.

Setting options for the P633 and the different possibilities to integrate a switchgear unit into the functional sequence of the P633 (processing of status signals only or controlling and signaling) will be explained below, using one switchgear unit as an example. Function group DEV01 will be used throughout in this example. If a signal is identified in the function diagrams by function group “COMM1:” with a blank address [--- ---], it will indicate that it is a signal to or from the communication interface and that it has not been assigned an address.

3.37.5 Processing Status Signals from Manually Operated Switchgear Units

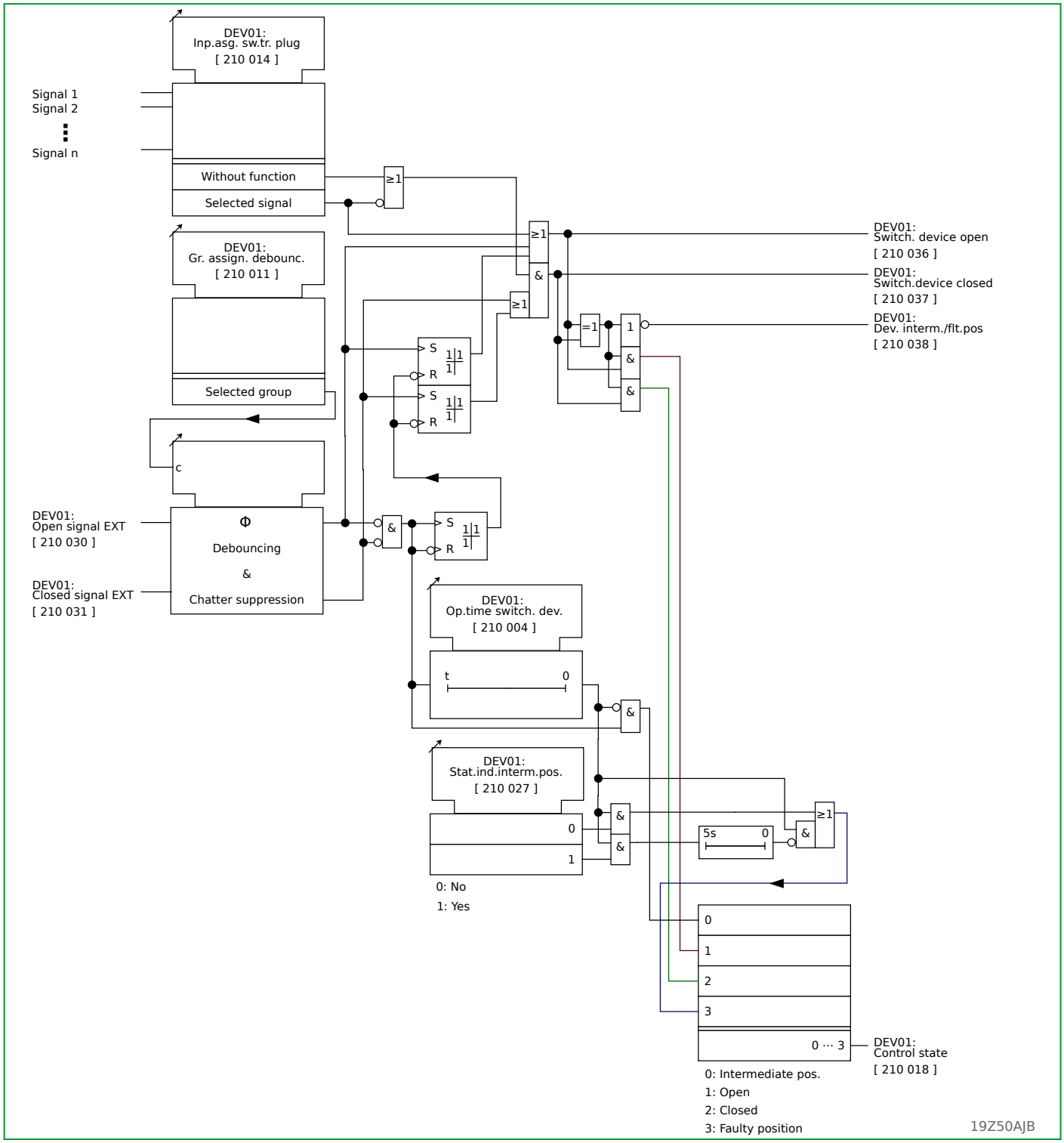

Fig. 3-199: Processing Status Signals from Manually Operated Switchgear Units.

3.37.5.1 Status Signals

The status signals “Open” and “Closed” are assigned to binary signal inputs. The signals conditioned by debouncing and chatter suppression (see Section 3.40.1.1, (p. 3-268)) are used for further processing. If no logic value of “1” is present at any of the two binary signal inputs, the running time monitoring function is started. For the duration of the set time period for running time

monitoring or until the contacts on the switchgear unit are back to a defined position – either “Open” or “Closed” – the signal “Intermediate position” is issued.

If DEV01: Interm. pos. suppr. is set to *Yes*, the previous switchgear unit status will continue to be signaled to the communication interfaces while the switchgear unit is operating. Once the contacts on the switchgear unit have reached their new position, the updated status is signaled accordingly to the communication interfaces. This parameter has no impact to internal signals, such as DEV01: Switch. device open, DEV01: Switch.device closed or DEV01: Dev. interm./flt.pos.

The signal “Faulty position” is issued if the contacts on the switchgear unit have not reached either their “Open” or “Closed” position after the set time period for running time monitoring and the delay time set in MAIN: Delay Man.Op.Superv. have elapsed. If DEV01: Stat.ind.interm.pos. is set to *Yes*, a delay time of 5 s is started. Once this time period has elapsed and there is no status signal for the position, the state actually present at the binary inputs will be signaled.

3.37.5.2 Switch Truck

For switchgear units mounted on switch trucks with switch truck plugs, it is possible to configure a single-pole status signal from the switch truck plug. If such a configuration has been assigned, the status signal for the position of the associated switchgear unit is set to “Open” while the input has a logic value of “1”.

3.37.6 Functional Sequence for Controllable Switchgear Units

3.37.6.1 Local or Remote Control of External Devices

Switchgear units can be controlled from a remote location or locally. The selection of the control point is described in Section 3.4.5, (p. 3-12). Usually, remote control is carried out via the communication interface, local control via the keys on the local control panel. Moreover, switchgear units can be controlled via binary inputs configured appropriately (configuration via DEV01: Inp.asg.el.ctrl.open or DEV01: Inp.asg.el.ctr.close). The setting MAIN: Electrical control determines whether the inputs function as remote or local control points.

Dependent on the respective position of control the P633 will issue the following logic state signals:

- MAIN: Cmd. fr. comm.interf, or
- MAIN: Command from HMI, or
- MAIN: Cmd. fr. electr.ctrl

Additionally the following state signals are issued and entered into the operating data memory:

- DEV01: Open cmd. received
- DEV01: Close cmd. received

The operating mode of the control point is signaled as follows:

	“Remote”	*“Local”*	*“Remote & Local”*
LOC: Rem.acc.block.active	*No*	*Yes*	*No*
LOC: Loc.acc.block.active	*Yes*	*No*	*No*

3.37.6.2 Selection of the Switchgear Unit to be Controlled and Generating a Switching Request

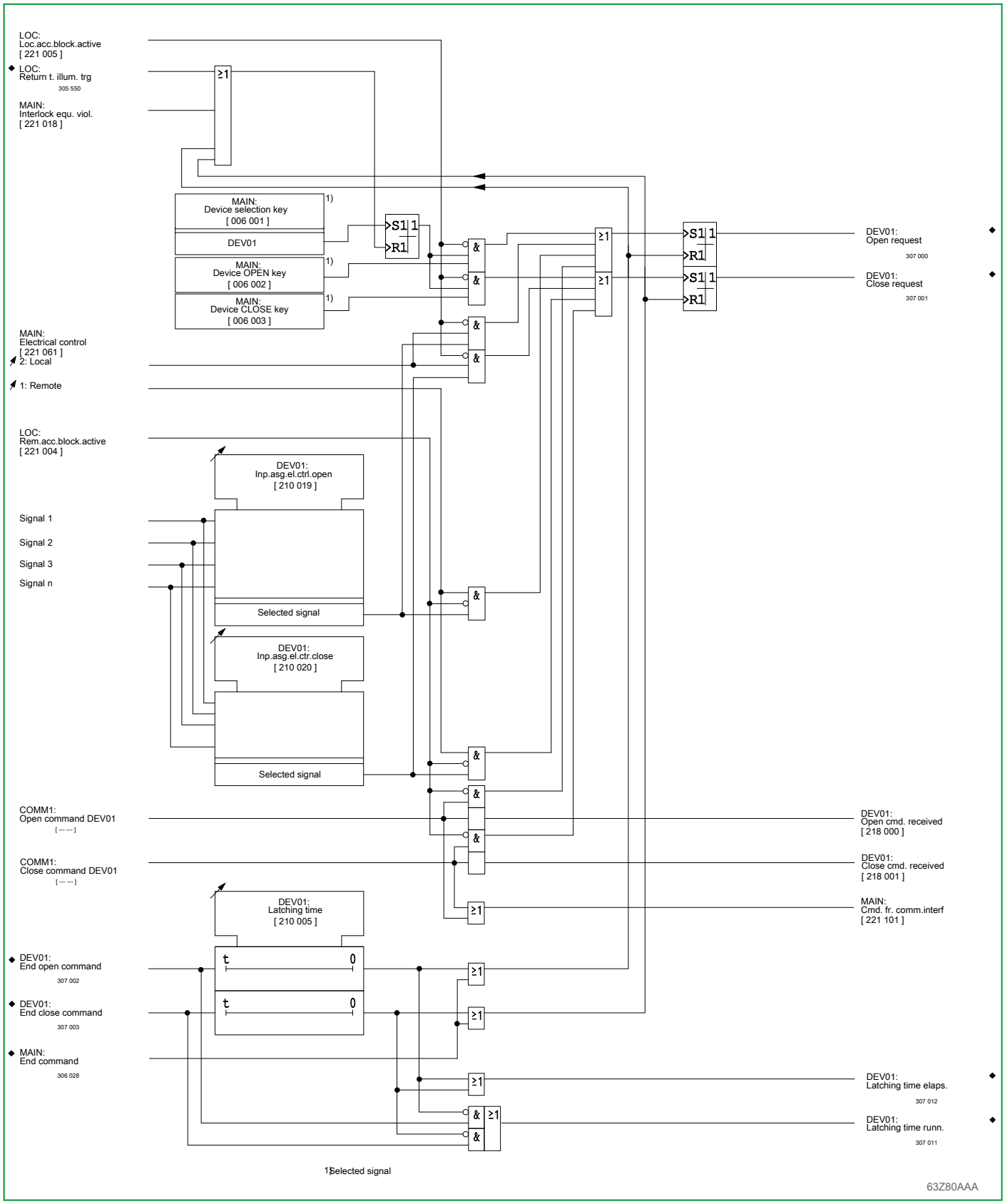

Fig. 3-200: Generating a switching request.

The switchgear unit to be controlled is selected and the switching command is sent to this selected switchgear unit. This can be carried out via the local control panel using the selection key and pressing the “Open” or “Close” key to generate the switching request.

Note that the front panel HMI on the P633 does not feature specific keys for switching functions. If at this point mention of a “selection key” is made, then this would be a function key to which a specific function has been assigned – in this example MAIN: Device selection key. See Section 6.9, (p. 6-11), particularly Section 6.9.2, (p. 6-13).

For control via binary inputs, the appropriate control inputs need to be configured for switchgear units selected to be controlled. For control via the communication interface, the control commands “Open” or “Close” will also address the switchgear unit to be controlled.

3.37.6.3 Enabling Switching Commands

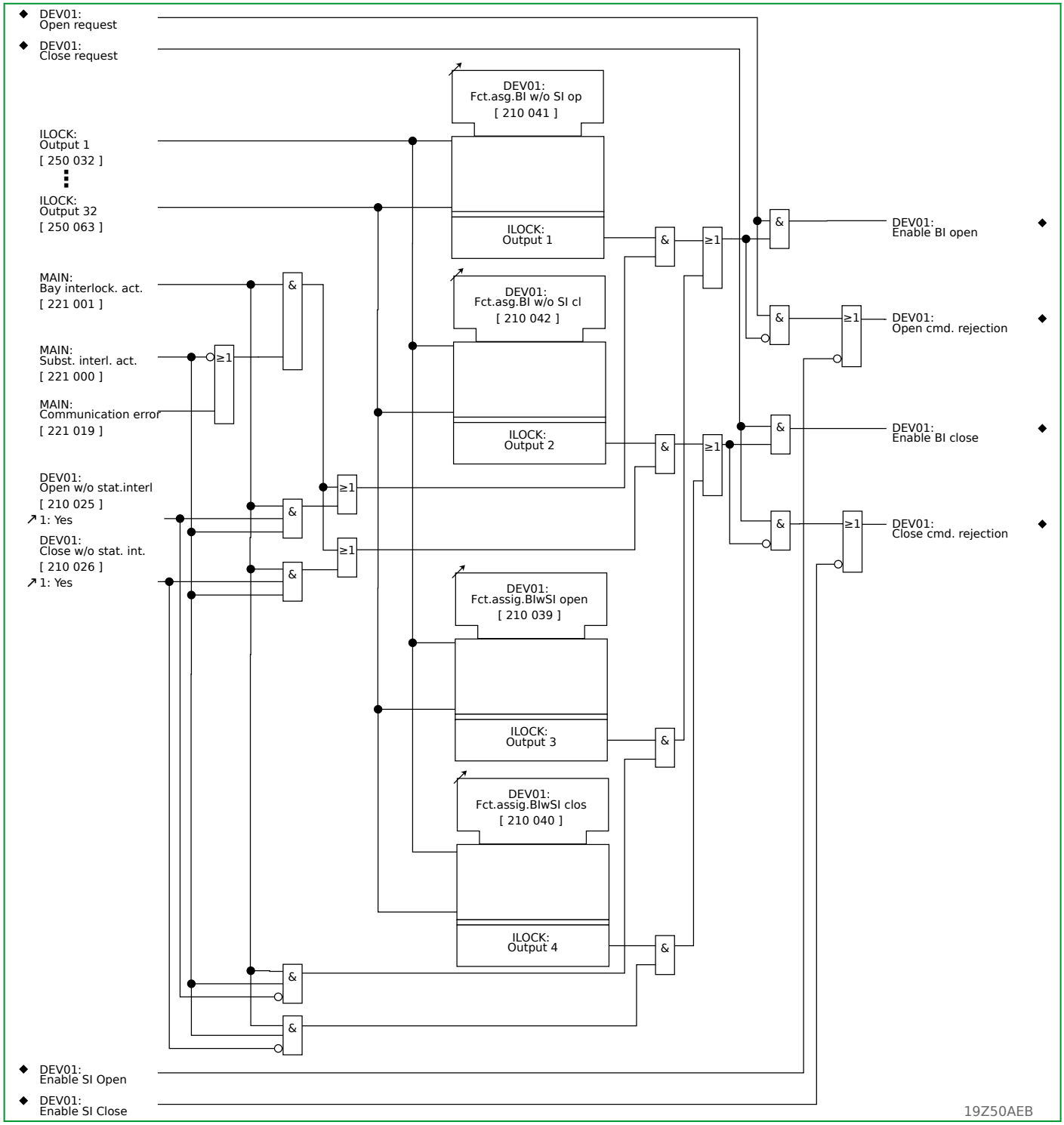

Fig. 3-201: Assignment of the equations of the interlocking logic to the switching commands; enabling of switching commands by the bay interlock function.

Before a switching command is executed, the P633 checks the interlocking conditions defined in the interlocking logic to determine whether a switching command is permitted or not. Bay interlock conditions for operation with or without the station interlock function can be defined. The assignment of an output relay from the interlocking logic to a switching command determines the interlocking conditions that define, for example, the conditions for the “Open” command for operation without the station interlock function.

3.37.6.4 Bay Interlock for Operation with the Station Interlock Function

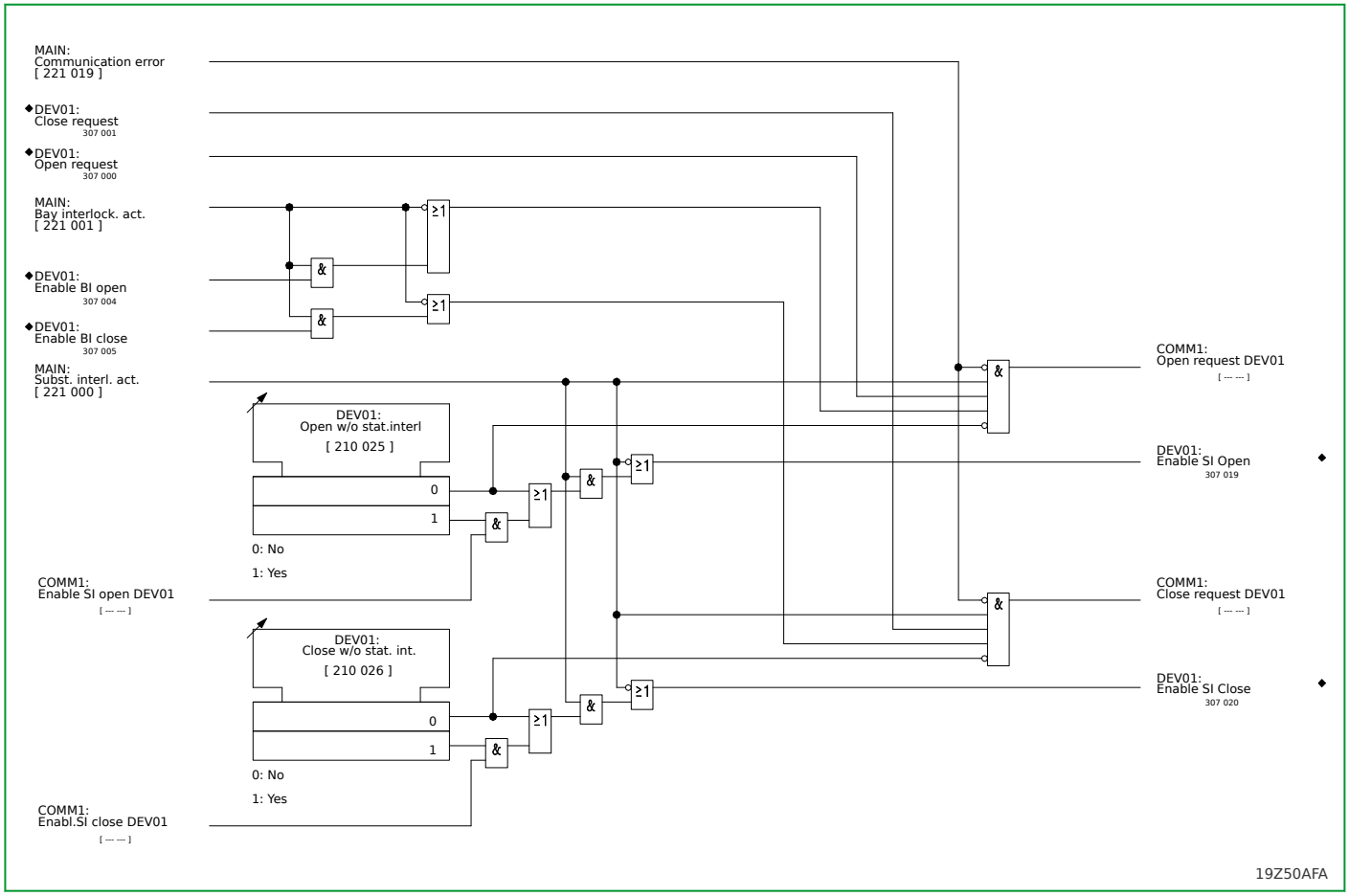

Fig. 3-202: Enabling of the switching commands by the station interlock.

For the station interlock function conditions to be interrogated, there needs to be a communication link with the substation control level. If the P633 detects a communication error or if there is no communication interface available, there will be an automatic switch to bay interlock without the station interlock function.

If there is to be a check on the bay interlock and the station interlock function, the bay interlock will be checked first. If bay interlocking issues a switching enable, a switching request will be sent to the substation control level. At substation control level, there will then be a check – taking into account the station interlock functions – as to whether switching is permitted or not. If the substation control level also issues an enabling command, the switching operation is carried out provided that the enable from the bay interlock is still present. Optionally, the “Open” or “Close” switching operation can be carried out without checking the station interlock function conditions. In this case, the bay interlock conditions defined for operation without station interlock functions will be considered.

3.37.6.5 Linking Protection Commands to Switching Commands

For circuit breakers, the “Open” command can be linked to the protection trip signals.

The Bay Panel type defines which of the switchgear units are circuit breakers. The trip (open) or close commands of the protection functions are executed directly without a check of the interlocking conditions.

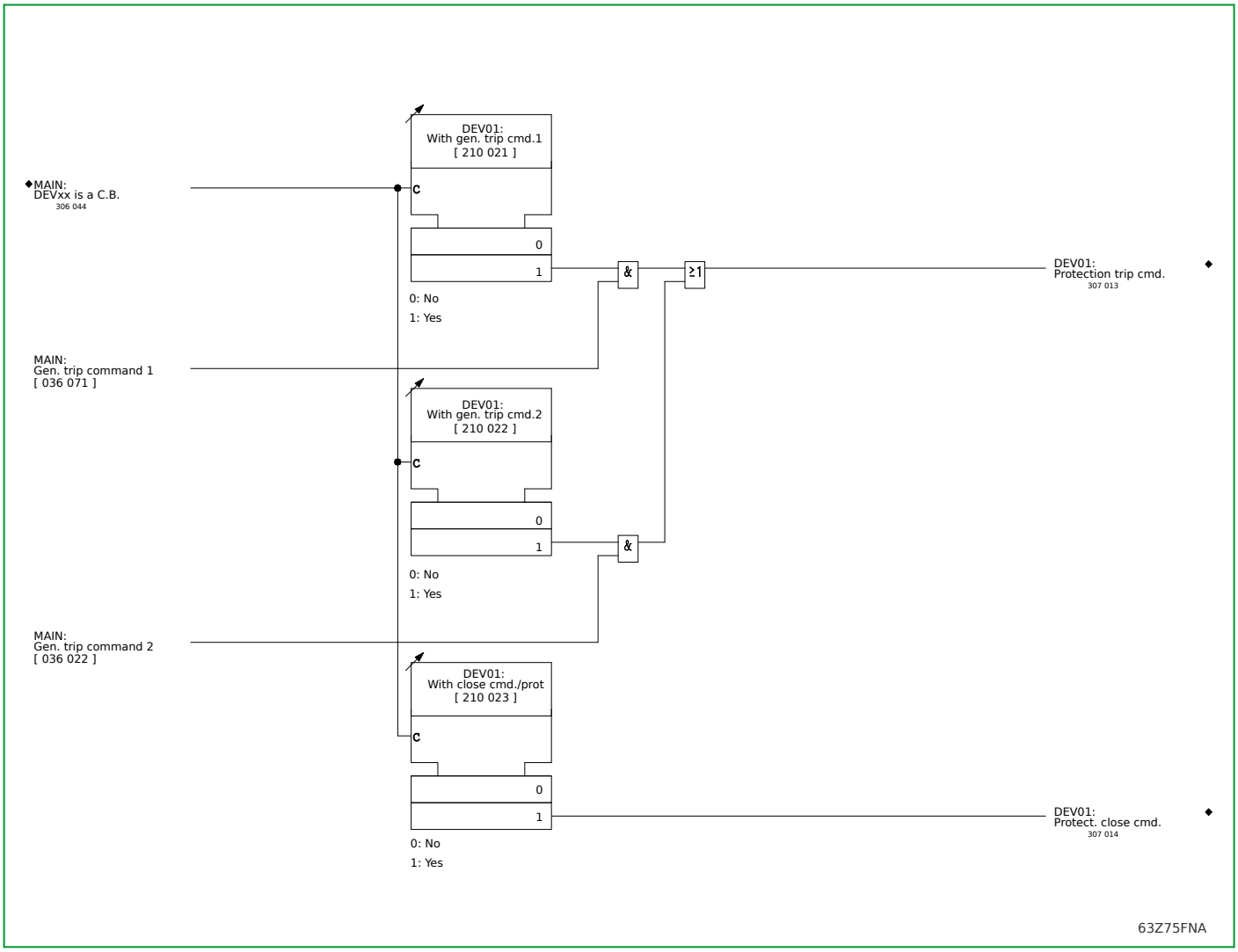

Fig. 3-203: Linking to the protection commands.

3.37.6.6 Issue of Switching Commands

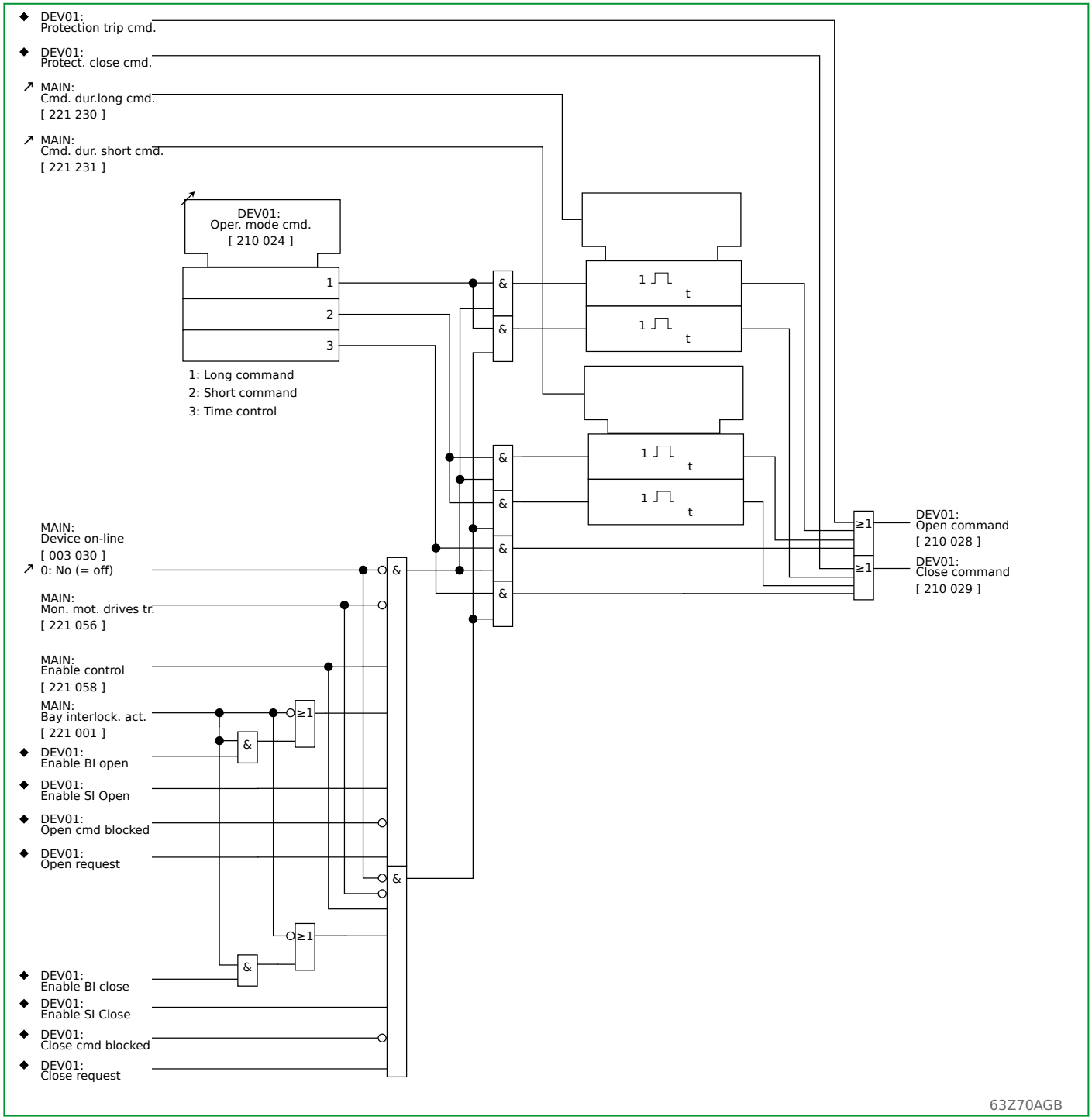

Fig. 3-204: Issue of switching commands.

Dependent on the operating mode (set at DEV01: Oper. mode cmd.) set for commands, switching commands are issued for the set timer durations or according to time control.

3.37.6.7 External Termination Control

If the operating mode *Time control* was selected it is possible to intervene in the control process of external switchgear units by using external termination contacts. It will then be necessary to set the P633 at MAIN: W. ext. cmd. termin. to *Yes* and binary signal inputs must be configured so they can be

connected to the external termination contacts. The input configuration has to be done for each device separately. Be aware that an external command termination does not make sense for a fast switch as a circuit breaker, as its operation is edge-controlled and involves no motor being directly time-controlled (contrast to a disconnector drive).

3.37.6.8 Switch Truck

For switchgear units mounted on switch trucks with switch truck plugs, it is possible to configure a single-pole status signal from the switch truck plug. If such a configuration has been assigned, the status signal for the position of the associated switchgear unit is set to ‘Open’ while the input has a logic value of “1”.

3.37.6.9 Time Control of Switching Commands

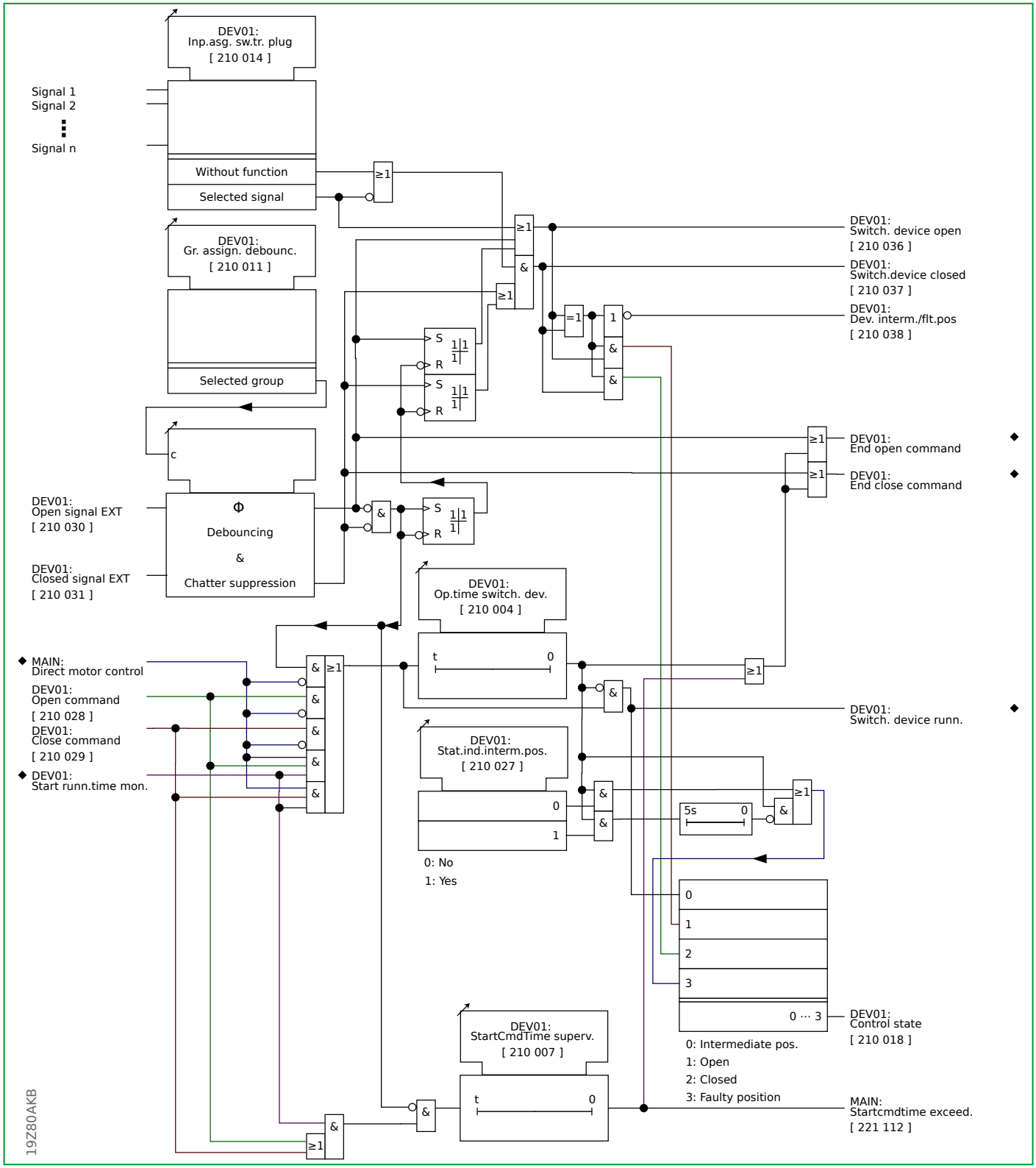

Fig. 3-205: Monitoring of switching commands.

After sending an Open / Close command, running time monitoring for the switchgear unit is started.

The P633 expects that the switchgear unit has reached its intermediate position within a period of time that can be configured via `DEV01: StartCmdTime superv.` (for DEV01, respective setting parameters exist for the other DEVxx). If

the switchgear unit has not reached its intermediate position after this time has elapsed then the command is deactivated and an exceeded timer is flagged by the signal MAIN: Startcmdtime exceed.. In case of a switchgear unit for which it is (almost) impossible to detect the intermediate position (for example a Circuit Breaker) it is recommended to switch off this monitoring by setting the parameter to Blocked.

Moreover, the P633 expects a status signal – “Open” or “Closed” to be issued by the switchgear unit within the duration of running time monitoring. The status signal for the position of the contacts on the switchgear unit is present at appropriately configured binary inputs on the P633, which can be set to debouncing and chatter suppression mode (see Section 3.40.1.1, (p. 3-268)). For the duration of running time monitoring or until the contacts on the switchgear unit are back to a defined position – either “Open” or “Closed” – the signal “Intermediate position” is issued.

If DEV01: Interm. pos. suppr. is set to *Yes*, the previous switchgear unit status will continue to be signaled to the communication interfaces while the switchgear unit is operating. Once the contacts on the switchgear unit have reached their new position, the updated status is signaled accordingly to the communication interfaces. This parameter has no impact to internal signals, such as DEV01: Switch. device open, DEV01: Switch.device closed or DEV01: Dev. interm./flt.pos.

If the contacts on the switchgear unit have not reached either their “Open” or “Closed” position after the set time period for running time monitoring has elapsed the signal *Faulty position* is issued. If DEV01: Stat.ind.interm.pos. is set to *Yes*, a delay time of 5 s is started. Once this time period has elapsed and there is no status signal for the position, the state actually present at the binary inputs will be signaled.

If the operating mode **without** external termination contacts was selected (MAIN: W. ext. cmd. termin.. is set to *No*) the switching command is terminated after the set latching time has elapsed, when either the ‘Open’ or ‘Closed’ position status signal is received or the set time period for running time monitoring has elapsed (see Fig. 3-200, (p. 3-250)).

If the operating mode **with** external termination contacts was selected (MAIN: W. ext. cmd. termin.. is set to *Yes*) the switching command is terminated, after the set latching time has elapsed, when a termination command is issued while the set time period for running time monitoring is active.

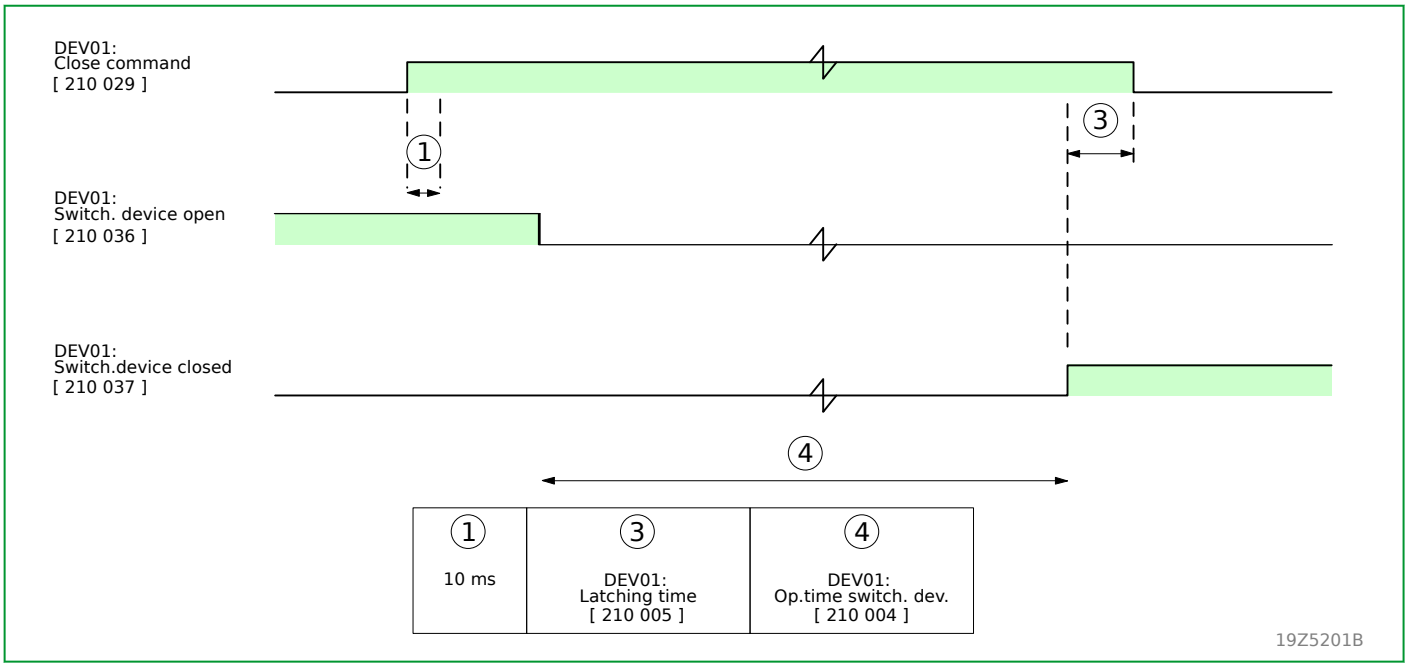

Fig. 3-206: Sequence for time control of switching commands without external termination control, example for switching operation “close”.

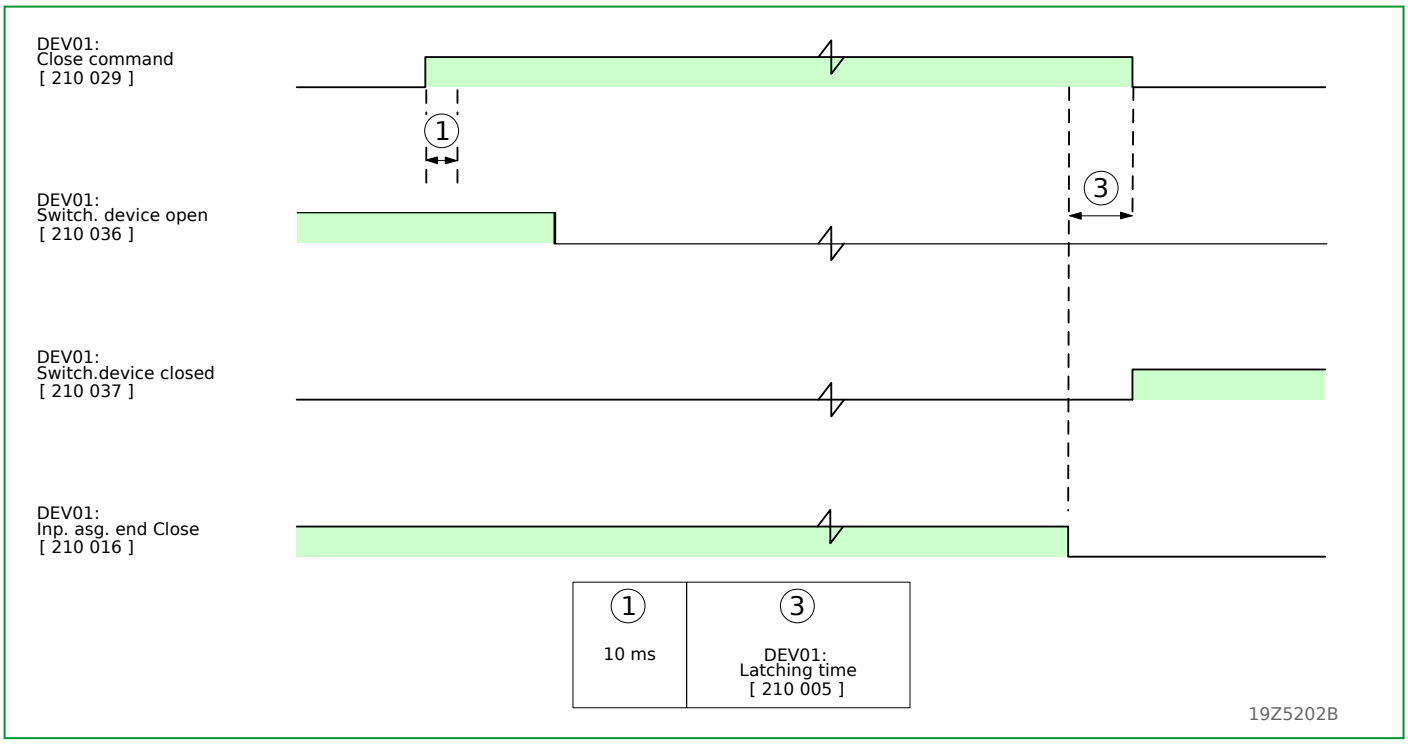

Fig. 3-207: Sequence for time control of switching commands with external termination control, example for switching operation “close”.

3.37.6.10 Monitoring the Number of CB Operations Permitted

The maximum number of CB operations within a specific time period may be set with parameter MAIN: CB1 max. oper. cap. Associated with this parameter is the counter at MAIN: CB1 act. oper. cap. to which the maximum number of CB operations permitted is assigned as soon as the positive edge of an event is present that has been selected by a “1 out of n” parameter at MAIN: CB1 ready fct.assign.

The number of CB operations permitted, set with the counter at MAIN: CB1 act. oper. cap. are then decremented by 1 with each CB operation. Operation of the CB is recognized from the contact position signals DEV01: Switch. device open and DEV01: Switch.device closed.

The counter at MAIN: CB1 act. oper. cap. may only be decremented to a value of 1. Reaching a value of 1 will in no way effect the protection or control functionality, in particular there will be no blocking of CB operation! When a CB fault has occurred (i.e. MAIN: CB1 faulty EXT is set to *Yes*) the counter MAIN: CB1 act. oper. cap. is immediately set to 1.

3.38 Interlocking Logic (Function Group ILOCK)

The switching commands to the controllable switchgear units in the bay are enabled only after interlock conditions have been checked. The interlock conditions are defined in the form of Boolean equations in the interlocking logic function.

The choice of the bay type automatically defines the bay interlock conditions (or equations) for the ‘Open’ and ‘Close’ operations of the individual switchgear units in the bay. The bay interlock equations for operation with station interlock differ from the bay interlock equations for operation without station interlock. These automatically defined interlock conditions – determined by the choice of bay type – can be modified by the user at any time to fit particular station requirements. The following signals acquired by the P633 are linked by logic operations for the bay interlock:

- Function blocks 1 and 2
- Programmable logic outputs
- Switchgear position signals, after debouncing and chatter suppression
- Single-pole signals, after debouncing and chatter suppression

A maximum of 32 equations with 32 equation elements each are available to define interlock conditions. The Boolean equations need to be defined without the use of brackets. The following rule applies to the operators: “NOT” before “AND” before “OR”. The output signal of one equation can be fed into a higher-order equation as an input thus creating a sequence of interlinked Boolean equations.

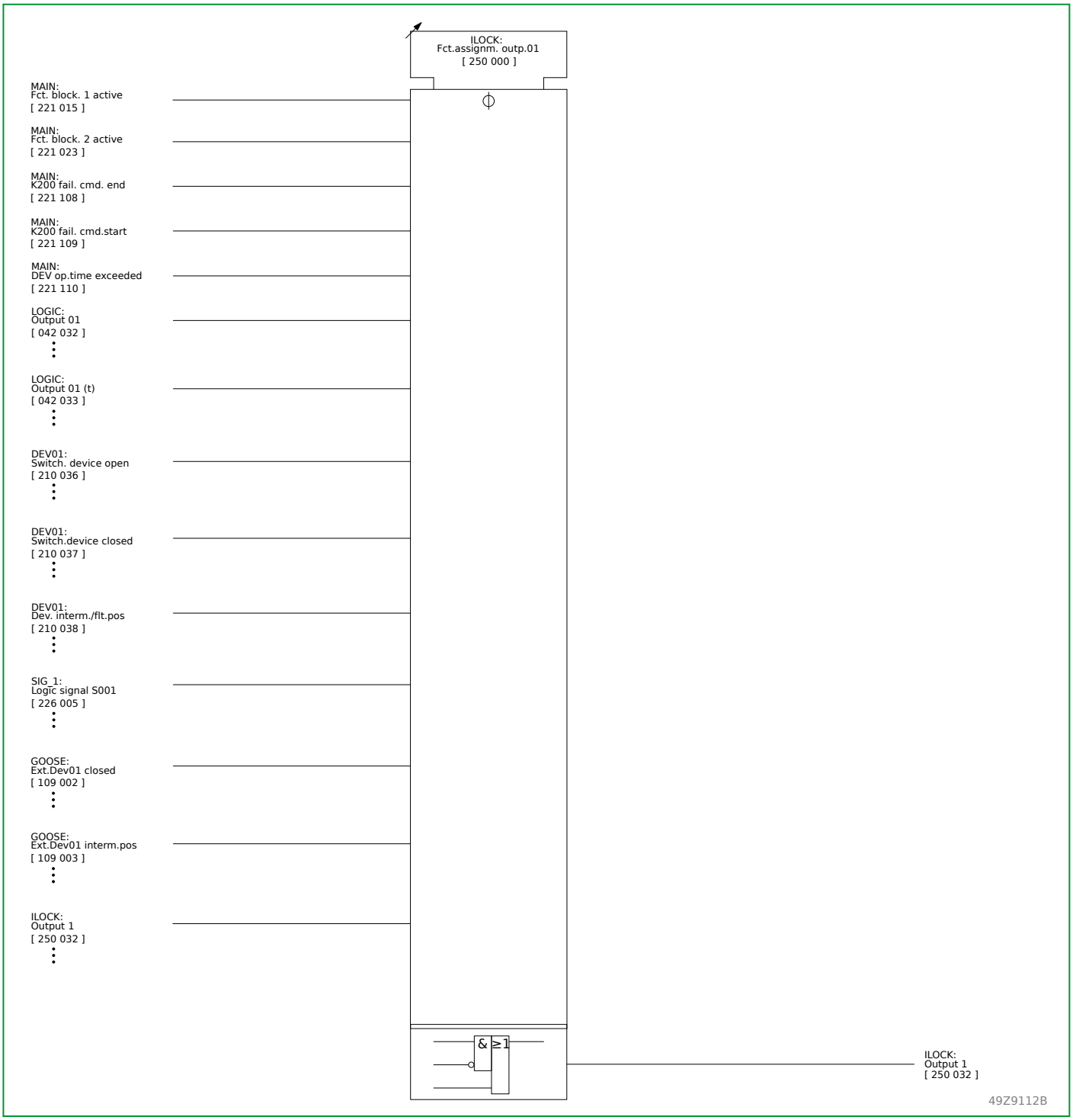

Fig. 3-208: Interlocking logic as illustrated for equation 1.

3.38.1 IEC 61850 Reporting

As the interlock conditions are also transmitted together with reporting in the IEC 61850 communication protocol it is a requirement that these interlock conditions are cyclically checked and not only with the request for a switching operation.

Therefore the parameter (221 104) ILOCK: Cycle t interl.check allows for setting the cycle time (range from 100 ms to 10 s), after which a check of the interlock conditions is carried out. If this parameter is set to *blocked* (default value), the ILOCK signals over IEC 61850 will be updated only if a control command gets executed. If the DEV state changes without a control command

these signals remain unchanged. As additional processor capacity must be provided for each of these checks it must be ensured that a favorable compromise is found for the cycle time setting value. On the one hand it is desirable to select a cycle time value which is as short as possible so that changes in the interlock conditions are updated without any notable delays, but on the other hand this cycle time value should not be so short that the P633 system will be under too much strain. As the P633 CPU load is dependent on the total number of function groups having been configured it is not possible to suggest a generally acceptable cycle time value.

3.39 Single-Pole Commands (Function Group CMD_1)

Commands may be transmitted to the P633 via the communications interface. When the P633 receives such a command, and if the remote control mode is enabled, an appropriately configured output relay will be triggered and a signal issued.

The user can select the operating mode for each 1-pole command. The following settings are possible:

- *Long command*
- *Short command*
- *Persistent command*

If the operating mode *Long command* or *Short command* has been selected the output relay will be triggered for the time period set at MAIN: Cmd. dur.long cmd. or MAIN: Cmd. dur. short cmd..

The setting options and the functional sequence are shown in the example for Command C001. This will apply accordingly to all other single-pole commands.

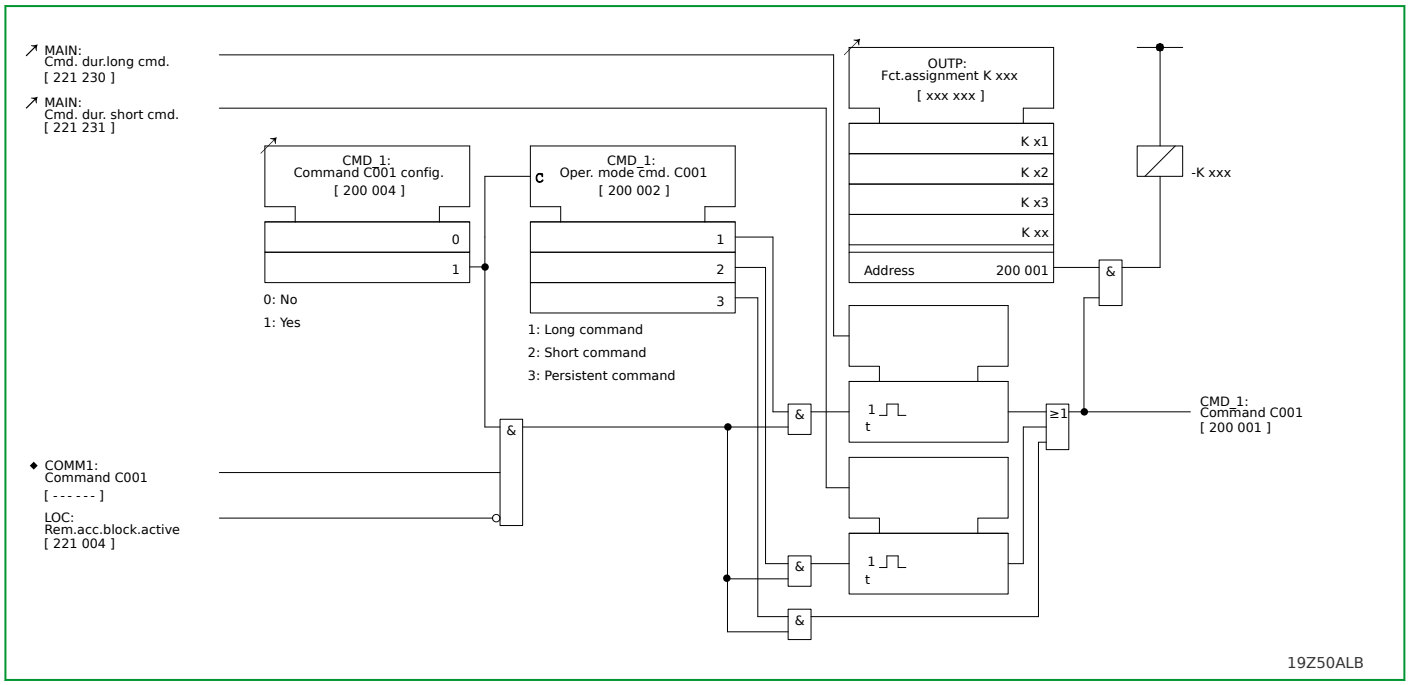

Fig. 3-209: Functional sequence for single-pole commands, as illustrated for Command C001.

3.40 Single-Pole Signals (Function Group SIG_1)

Binary, single-pole signals issued by the system may be transmitted by the P633 via its appropriately configured binary signal inputs to the control station.

Such single-pole input signals are conditioned by debouncing and chatter suppression (see Section 3.40.1.1, (p. 3-268)). This conditioned signal is then presented as SIG_1: Logic signal S001 (to SIG_1: Logic signal S012).

Signaling behavior via the communications interface is determined by selecting the operating mode. The following settings are possible:

- *Without function*
- *Start/end signal*
- *Transient signal*

If setting *Without function* has been selected then no message is transmitted when the signal state at the binary signal input changes. If setting *Start/end signal* has been selected then a message is transmitted every time the signal state at the binary signal input changes. A requirement for transmission of the *“Start signal”* message is that the logic “1” signal is present for the set minimum time period. If setting *Transient signal* has been selected then a message is transmitted every time the signal state at the binary signal input changes form logic “0” to logic “1”.

The following figure displays setting modes and the functional sequence with the example for logic signal S001. This will apply accordingly to all other single-pole signals.

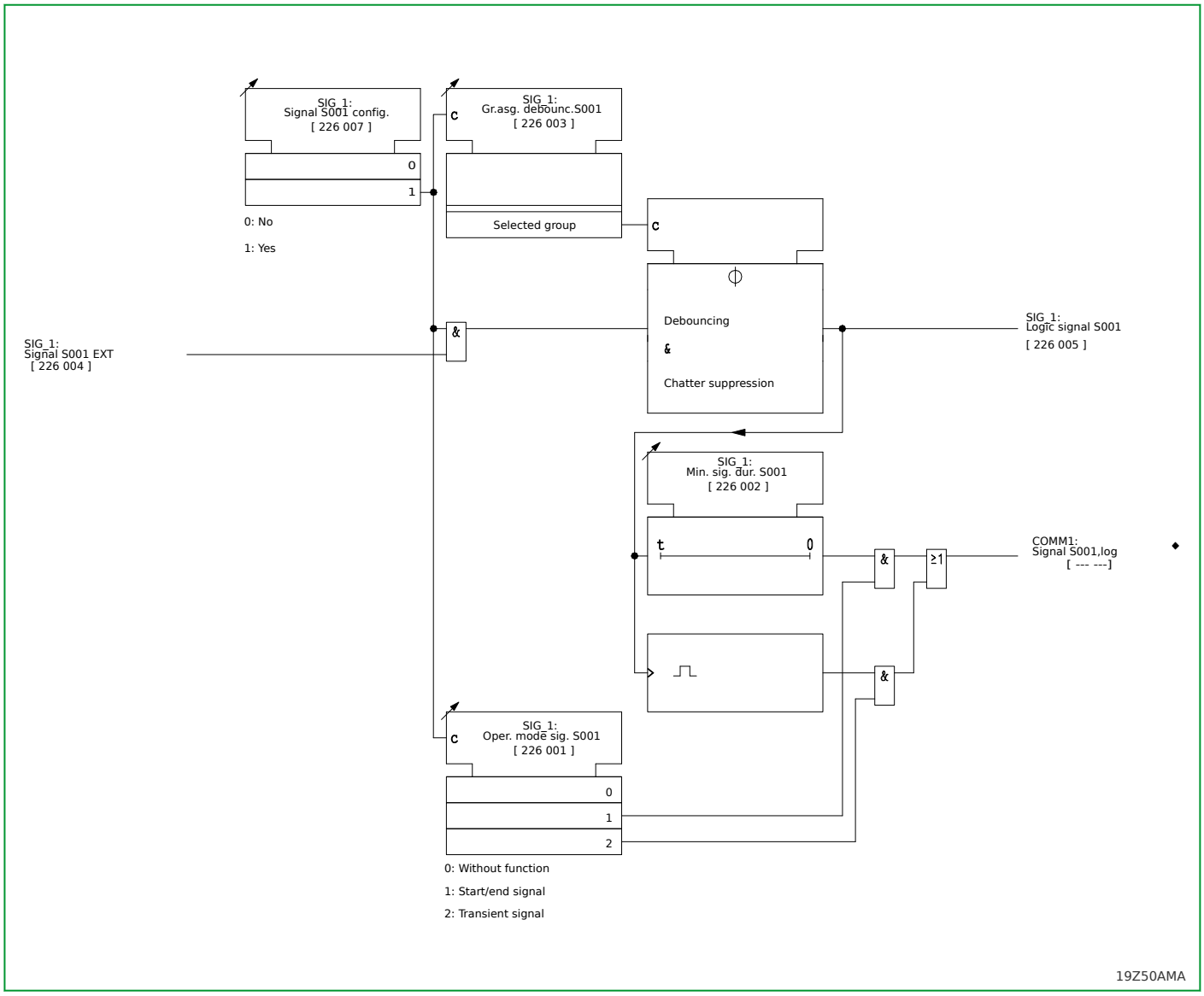

Fig. 3-210: Functional sequence for single-pole signals with the example for logic signal S001.

3.40.1 Acquisition of Binary Signals for Control

In the acquisition of signals for control purposes, the functions real time acquisition (time tagging), debouncing and chatter suppression are included as standard. Each of these signals can be assigned to one of three groups and for each of these groups the debouncing time and chatter suppression can be set. Matching of these two parameters achieves the suppression of multiple spurious pickups.

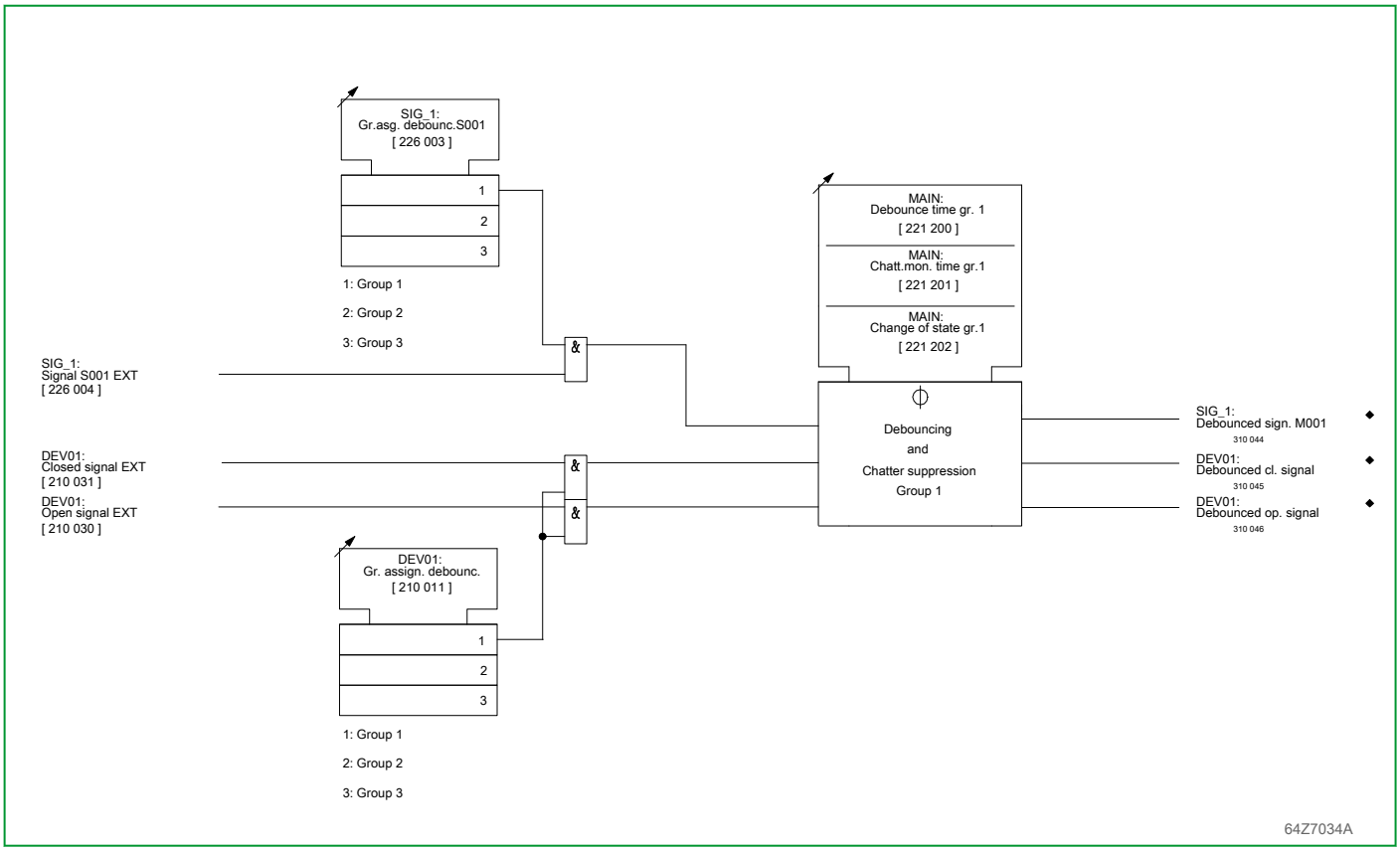

Fig. 3-211: Group assignment and setting of debouncing and chatter suppression, illustrated for group 1

3.40.1.1 Debouncing and Chatter Suppression

3.40.1.1.1 Debouncing

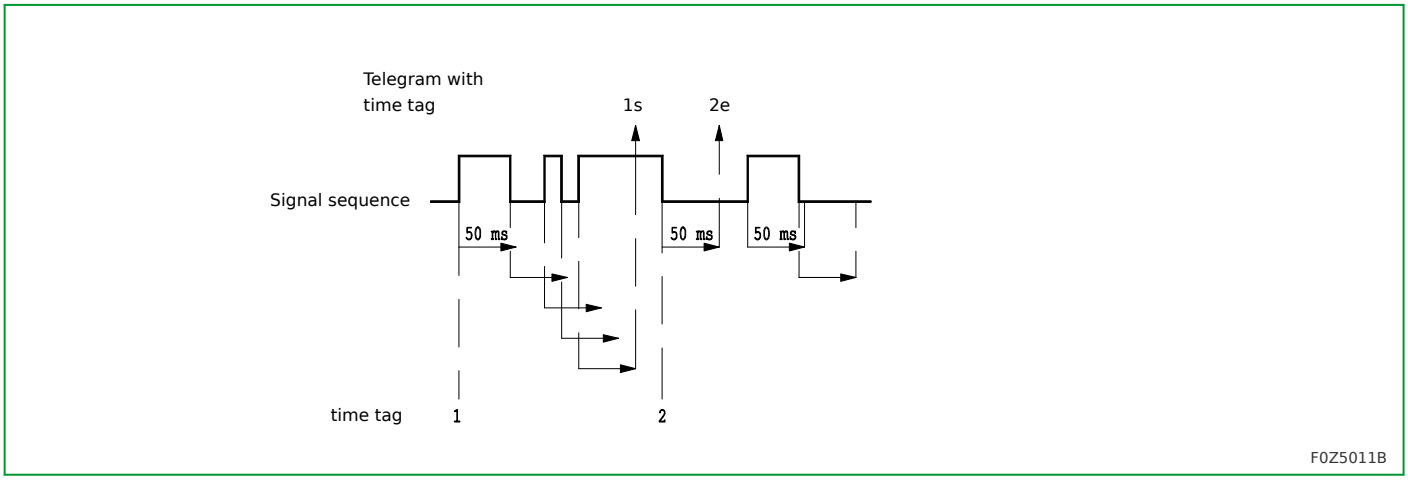

Fig. 3-212: Signal flow with debouncing when time tagging occurs with the 1st pulse edge (e.g. parameter MAIN: Time tag set to the value 1stEdge,OpMem unsort or 1stEdge,OpMem sorted.) Example: Set debouncing time: 50 ms, s: start, e: end.

The first pulse edge of a signal starts a timer stage running for the duration of the set debouncing time. Each pulse edge during the debouncing time re-triggers the timer stage.

If the signal is stable until the set debouncing time elapses, a telegram containing the time tag of the first pulse edge is generated. As an alternative the time tag may be generated after debouncing by setting parameter MAIN: Time tag to the value *After debounce time*.

After the set debouncing time has elapsed, the state of the signal is checked. If it is the same as prior to the occurrence of the first pulse edge, no telegram is generated.

Time-tagged entries of the first pulse edge are only generated after debounce time has elapsed. If these entries are saved without delay (setting of MAIN: Time tag to the value *1stEdge,OpMem unsort*) they are not necessarily saved in chronological order in the operating data memory. If above parameter has been set to the value *1stEdge,OpMem sorted* then all entries are always saved in chronological order in the operating data memory.

Time Tag

The following overview illustrates how the (221 098) MAIN: Time tag setting is operating.

Acquisition of binary signals for control	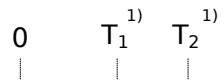
Voltage present at input terminals: Filter function to suppress transient interferences (required number of steps with active signal) (226 004) SIG_1: Signal S001 EXT (no time tag, internal signal to start debouncing)[2)]	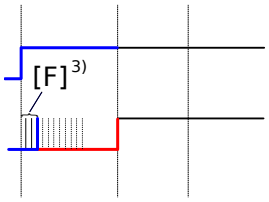
1stEdge,OpMem sorted: (226 005) SIG_1: Logic signal S001 ● on COMM1/IEC (Signaling at T_2 with time tag T_1 ● internal on operating memory (Entry in operating memory at T_2 with time tag T_2	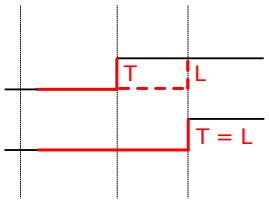
1stEdge,OpMem unsort: (226 005) SIG_1: Logic signal S001 ● on COMM1/IEC (Signaling at T_2 with time tag T_1 ● internal on operating memory (Entry in operating memory at T_2 with time tag T_1	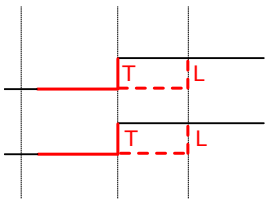
After debounce time: (226 005) SIG_1: Logic signal S001 ● on COMM1/IEC (Signaling at T_2 with time tag T_2 ● internal on operating memory (Entry in operating memory at T_2 with time tag T_2	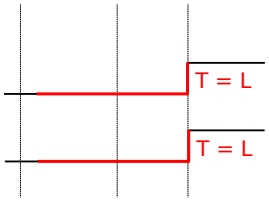
	T = Time tag L = Log of state

[1)] $T_2 = T_1$ (cycle time) + debounce time

[2)] SIG_1: Signal S001 EXT is not foreseen for any further transmission via communication interface, neither for assigning to functions nor LOGIC.

[3)] Filter (e. g. 3 sampling steps)

3.40.1.1.2 Chatter Suppression

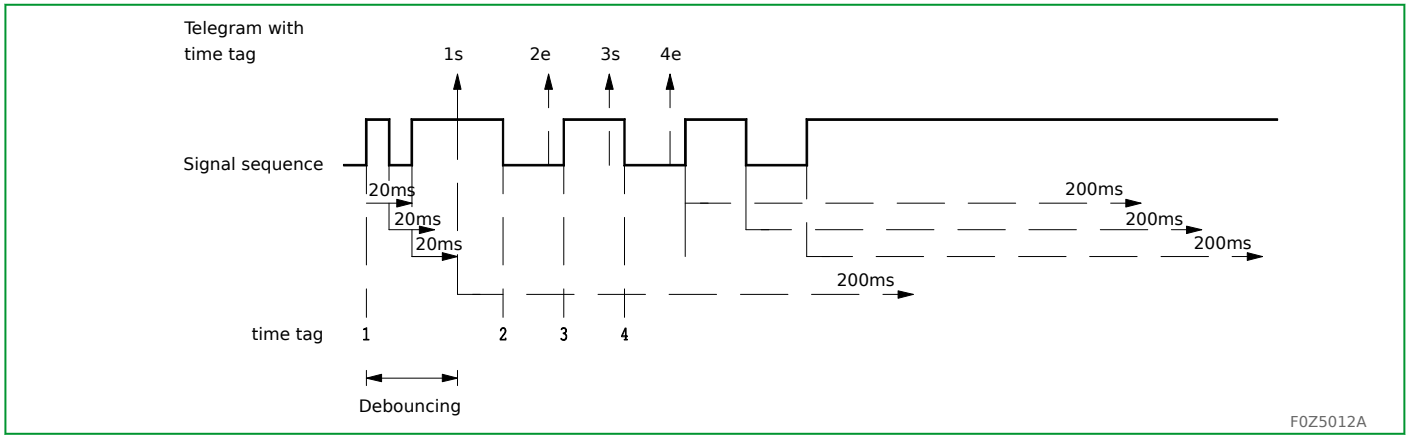

Fig. 3-213: Signal flow for debouncing and chatter suppression. Set debouncing time: 20 ms, set chatter monitoring time: 200 ms, number of admissible signal changes: 4, s: start, e: end.

Sending of the first telegram starts a timer stage running for the duration of the set monitoring time. While the timer stage is elapsing, telegrams are generated for the admissible signal changes. The number of admissible signal changes can be set. After the first “inadmissible” signal change, no further telegrams are generated and the timer stage is re-triggered. While the timer stage is elapsing, it is re-triggered by each new signal change. Once the timer stage has elapsed, each signal change triggers a telegram.

3.41 Binary Counts (Function Group COUNT)

The P633 features four binary counters. Each of these can count the positive pulse edges of a binary signal present at an appropriately configured binary signal input. Such a binary signal can be provided with debouncing.

3.41.1 Enable/Disable the Counting Function

The counting function (COUNT) can be disabled or enabled via setting parameters.

3.41.2 Debouncing

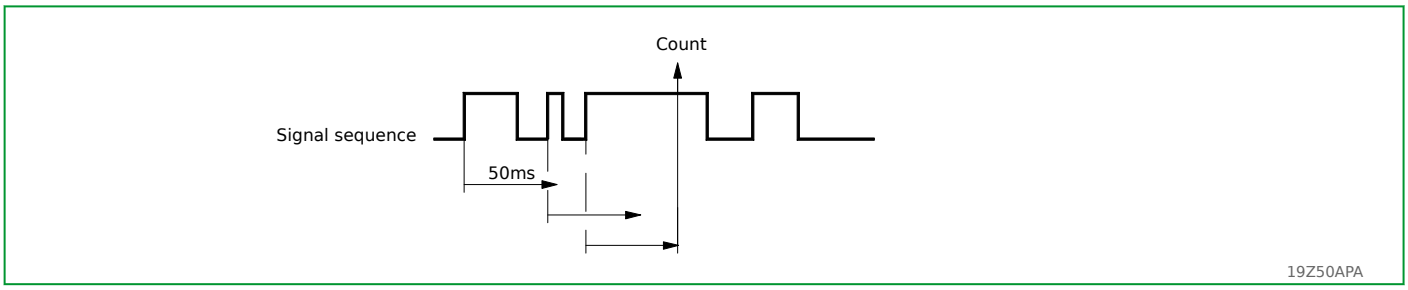

Fig. 3-214: Debouncing signal flow. Set debouncing time: 50 ms.

The first positive pulse edge of the binary input signal to be counted will trigger a timer stage which will continue to run for the set debouncing time period. Each positive pulse edge during the debouncing time re-triggers the timer stage. The binary input signal will be counted if it is stable during the set debouncing time period.

The debouncing time can be set separately for each of the four counters.

After the set debouncing time has elapsed, the state of the signal is checked. If it is the same as prior to the occurrence of the first pulse edge, it will not be counted.

3.41.3 Counting Function

The debounced binary signal is counted by a 16 bit counter. The counters may be set to a specific count value (preload function) by setting a parameter or via the serial interfaces. The values of the counters can be shown on the LC-display and read out via the PC interface or the communications interface.

For each of the four counters, there is a limit value that can be optionally set:

- COUNT: Limit counter 1 (and the same way for counters 2 to 4),
- settable from 1 to 65000,
- setting “Blocked” disables the limit check. (This setting is the default value.)

A warning signal (COUNT: Warning count 1 and the same way for counters 2 to 4) is issued if the associated counter value exceeds the set limit.

3.41.4 Transmitting the Counter Values via Communications Interface

The counter values are transmitted via the communications interface when a signal is presented to an appropriately configured binary signal input, a trigger signal is issued by a setting parameter or at cyclic intervals as set at the cycle time stage COUNT: Cycle t.count transm. When the counter value is transmitted at cyclic intervals, then transmission is time synchronized if the ratio

60/(set cycle time) comes to an integer. In all other cases the counter values are transmitted at time intervals determined by a free running internal clock.

3.41.5 Counter Values Reset

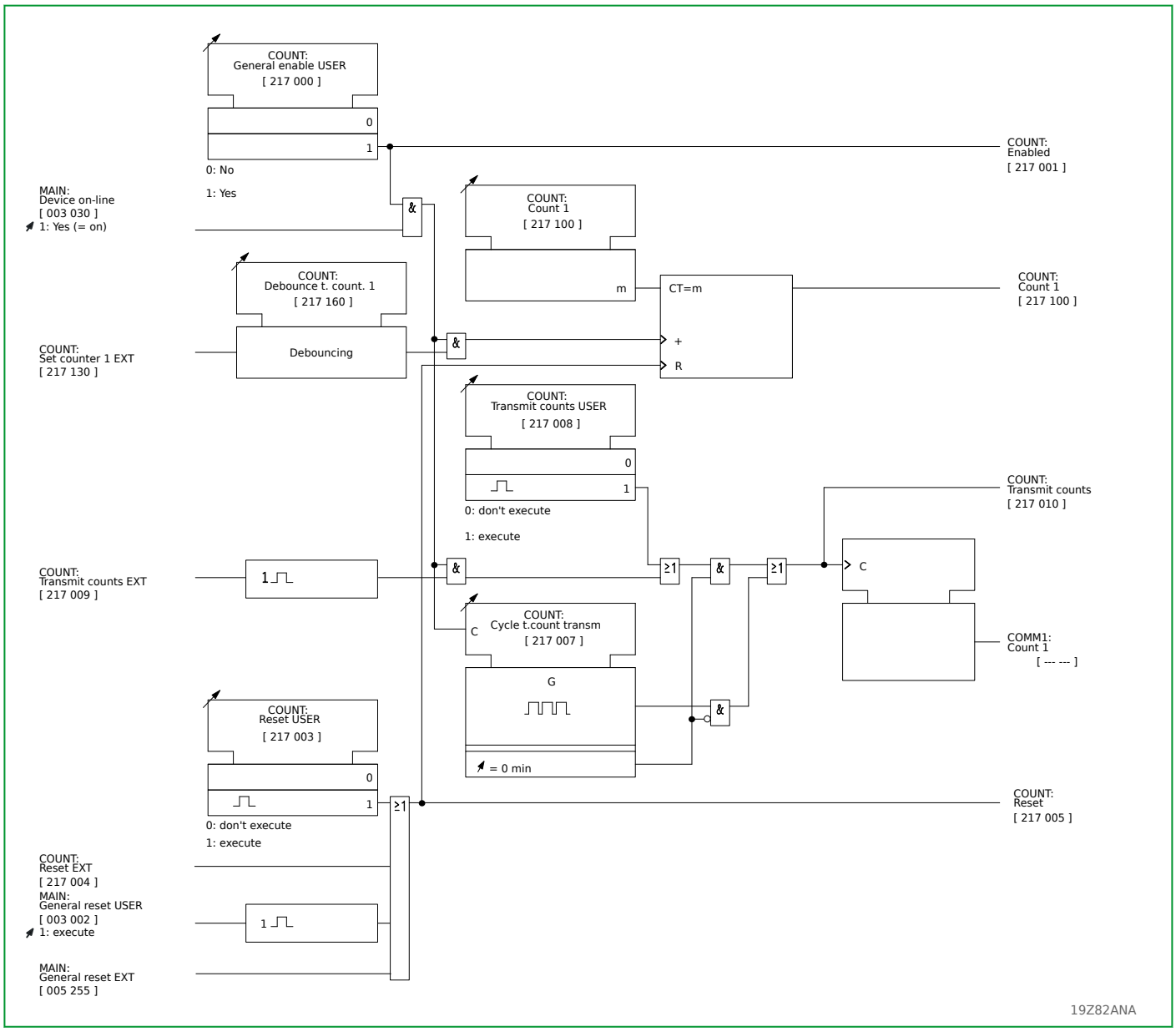

Fig. 3-215: Binary Count. (This diagram shows counter 1 as an example. The displayed logic is also valid for counters 2 to 4, where COUNT: Set counter 1 EXT and COUNT: Count 1 have to be replaced by the respective parameters.

The counter values may be reset – all at once – by setting parameter COUNT: Reset USER or via an appropriately configured binary signal input as well as by the general reset action.

4 Design

The P633 is available in different types of cases and with different combinations of modules.

Irrespective of the type a P633 is equipped with a detachable HMI or a fixed local control panel. The local control panel is covered with a tough film so that the specified degree of IP protection will be maintained. In addition to the essential control and display elements, a parallel display consisting of multi-colored LED indicators is also incorporated (see Section 6.2, (p. 6-2)). The meaning of the various LED indications is shown in plain text on a label strip.

The PC interface (9-pin D-Sub female connector) is located under the hinged cover at the bottom of the local control panel.

4.1 Designs

The P633 is available in a surface-mounted and a flush-mounted case. Depending on the connection type – pin-terminal or ring-terminal connection – the case sizes differ. The location diagrams (Section 5.7, (p. 5-26)) show the available combinations of case widths and connection types.

Electrical connections are made via plug-in threaded terminal blocks. The threaded terminal blocks in the surface-mounted case are accessible from the front of the device after unscrewing the torx head steal screws on the sides (see Fig. 4-1, (p. 4-3), ①) and removing the local control panel. The local control panel can then be secured by inserting the tabs in the slots in the left side wall (see Fig. 4-1, (p. 4-3), ②). The flush-mounted case is connected at the back of the case.

⚠ WARNING

HAZARD OF EQUIPMENT DAMAGE

- The local control panel (or front element) is connected to processor module P by a plug-in connecting cable. Make sure the connector position is correct. Do not bend the connecting cable!

Failure to follow these instructions can result in equipment damage or unintended equipment operation.

⚠ ⚠ DANGER

HAZARD OF ELECTRIC SHOCK, EXPLOSION, OR ARC FLASH

- Do not open the secondary circuit of live system current transformers! If the secondary circuit of a live CT is opened, there is the danger that the resulting voltages will endanger personnel and damage the insulation.
- For pin-terminal connection devices, the terminal block for system current transformer connection is not a shorting block! Therefore always short-circuit the system current transformers before loosening the threaded terminals.

Failure to follow these instructions will result in death or serious injury.

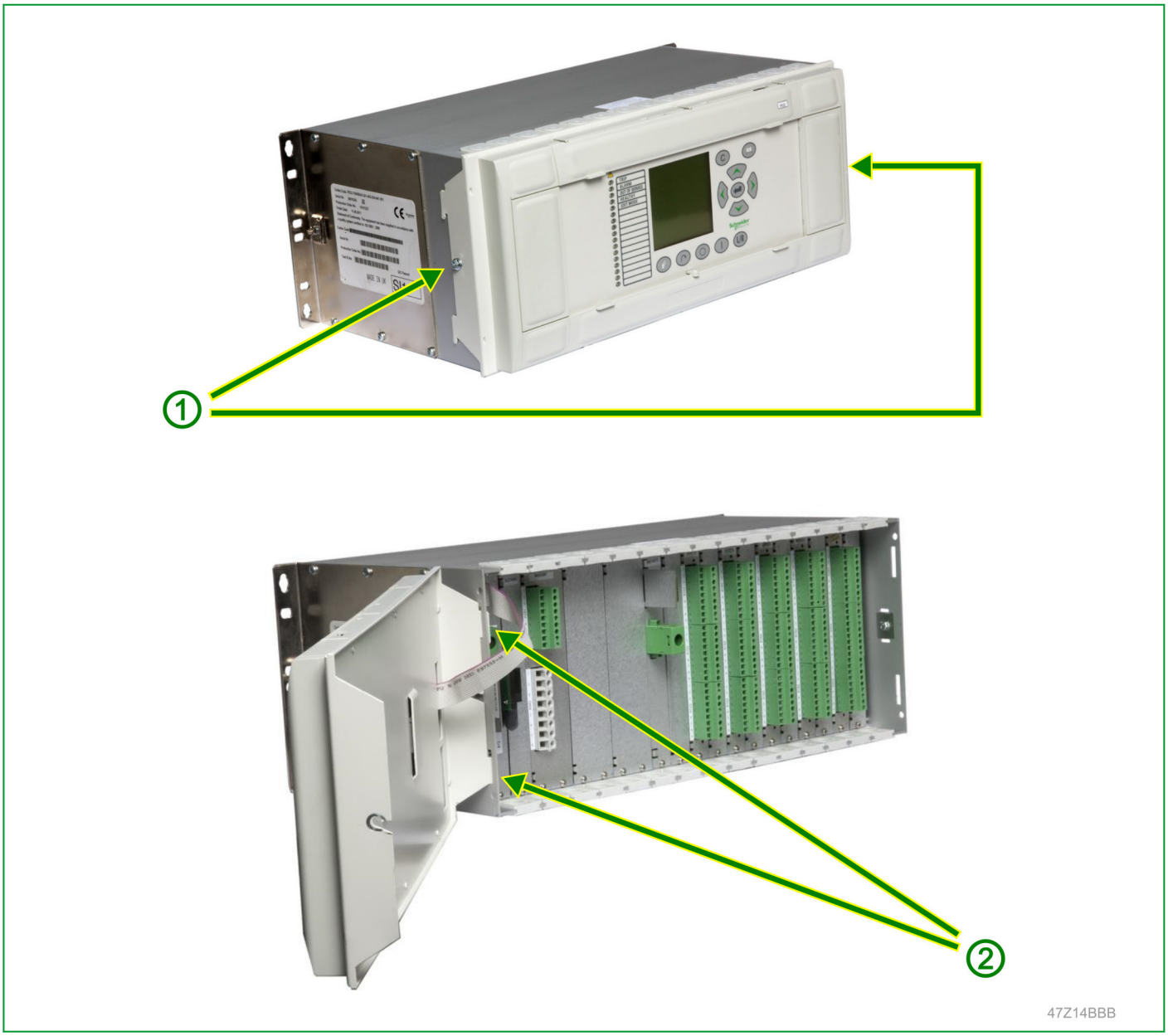

Fig. 4-1: Surface-mounted case, removal of local control panel (or – in case of a detachable HMI – the case front panel). The illustration shows the 84TE case with (fixed) local control panel.

4.2 Dimensional Drawings

4.2.1 Dimensional Drawings for the 40 TE Case

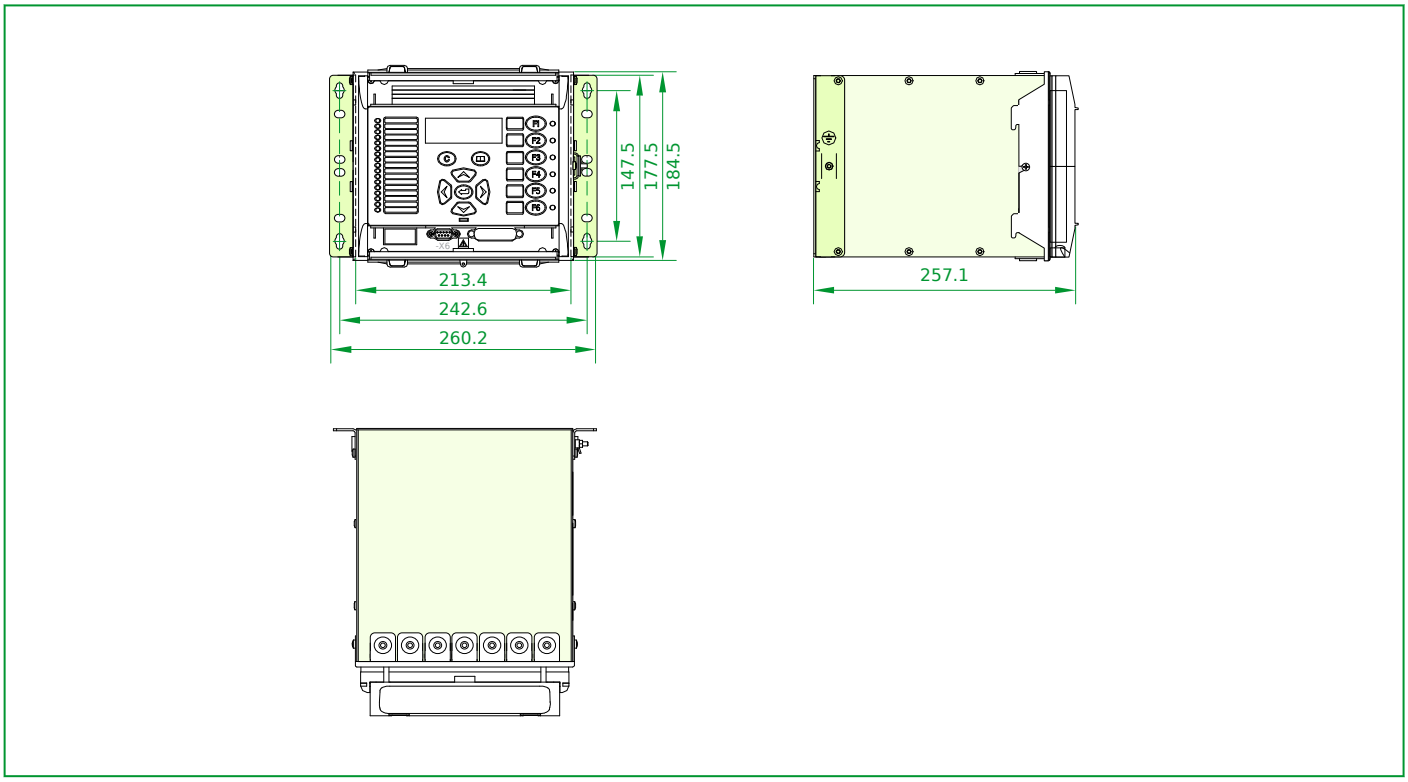

Fig. 4-2: Surface-mounted 40 TE case. (Dimensions in mm.)

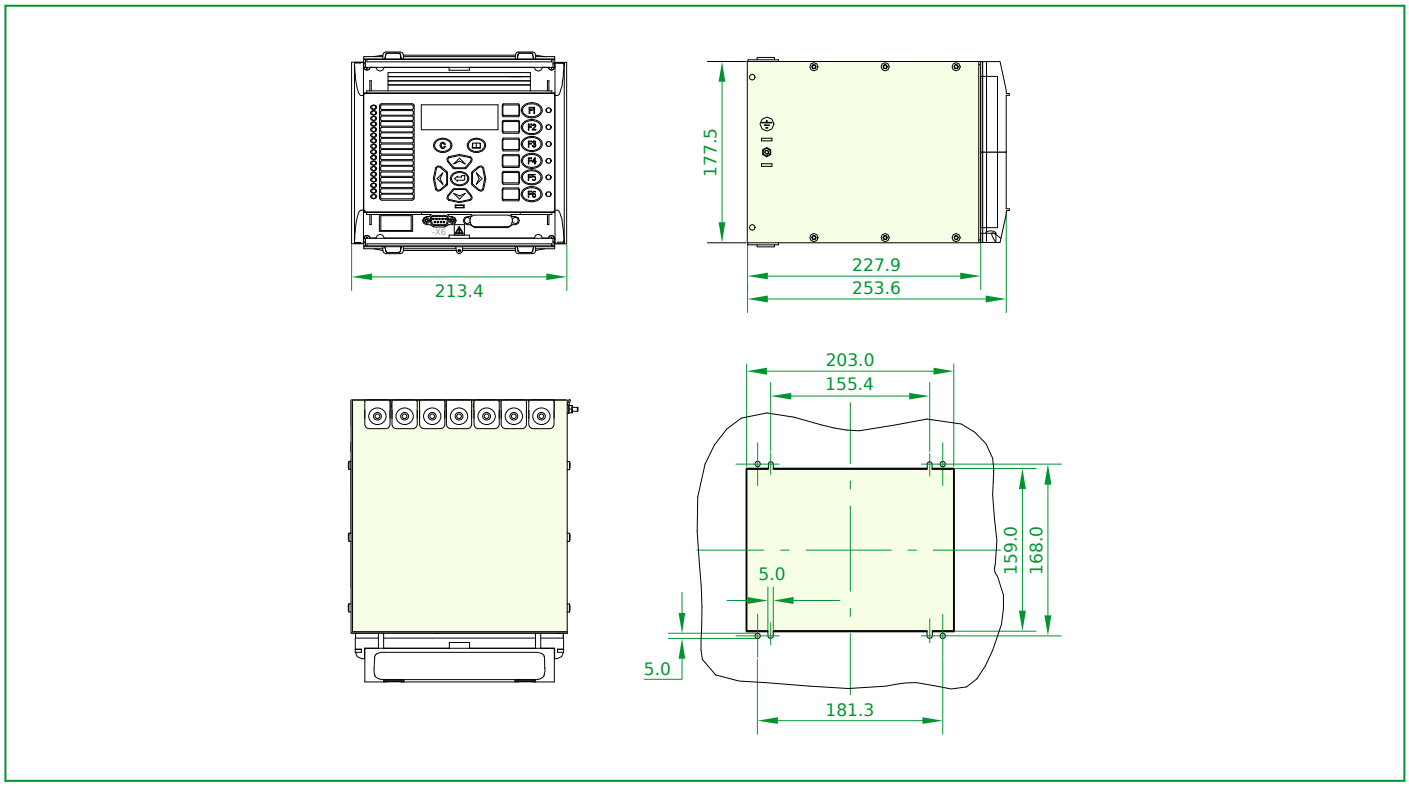

Fig. 4-3: Flush-mounted case 40 TE with panel opening, flush-mount method 1 (without angle brackets). (Dimensions in mm.)

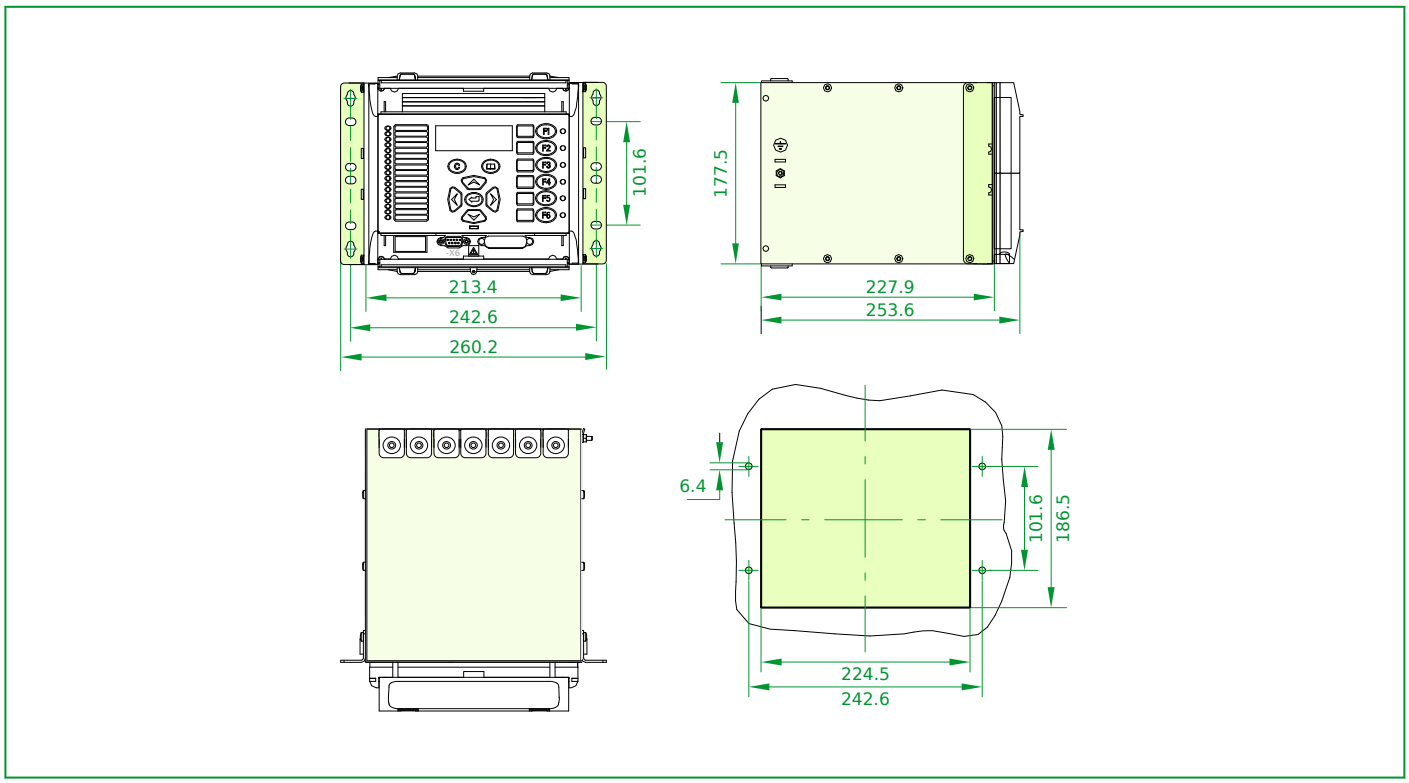

Fig. 4-4: Flush-mounted case 40 TE with panel opening, flush-mount method 2 (with angle brackets and frame). (Dimensions in mm.)

The device has increased mechanical robustness if flush-mount method 2 (with angle brackets and frame) is used for the flush-mounted case.

4.2.2 Dimensional Drawings for the 84 TE Case

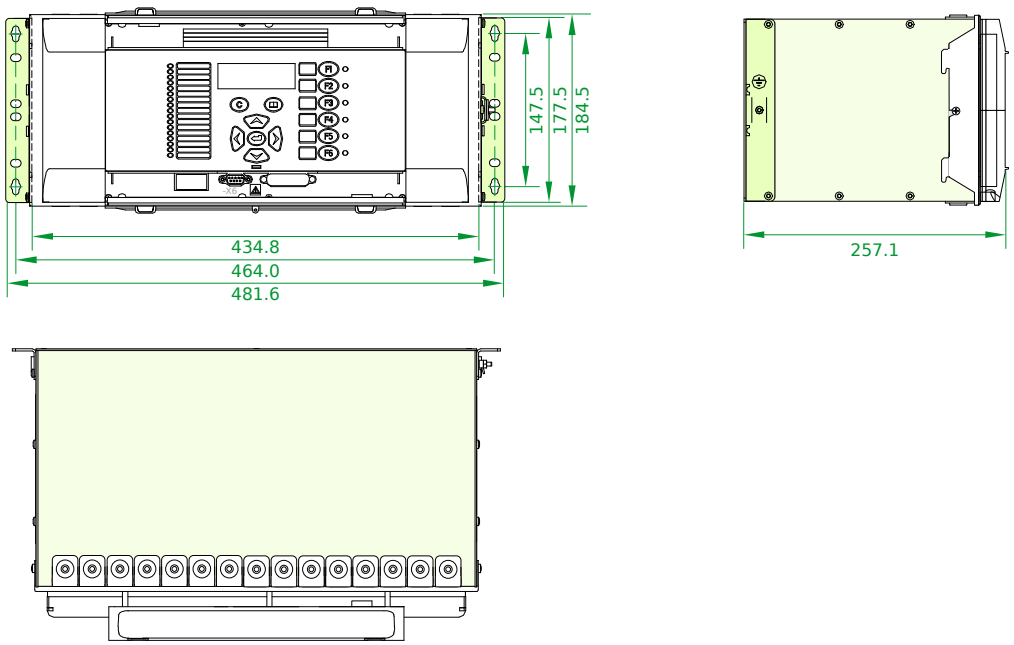

Fig. 4-5: Surface-mounted 84 TE case. (Dimensions in mm.)

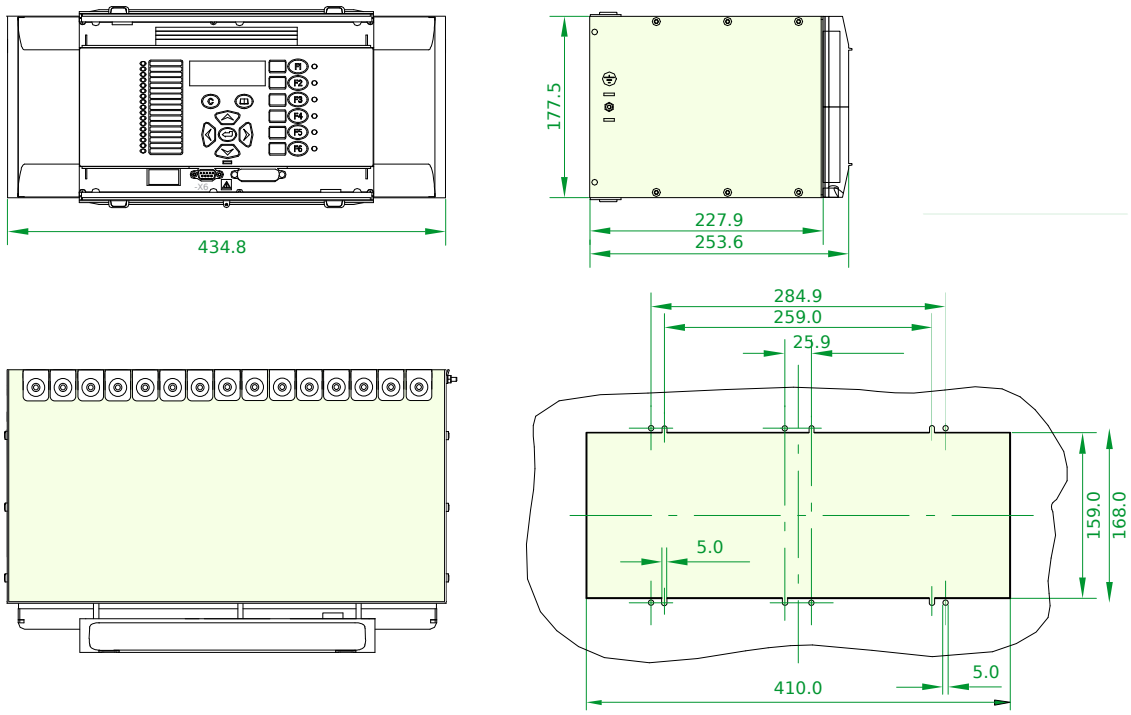

Fig. 4-6: Flush-mounted case 84 TE with panel opening, flush-mount method 1 (without angle brackets). (Dimensions in mm.)

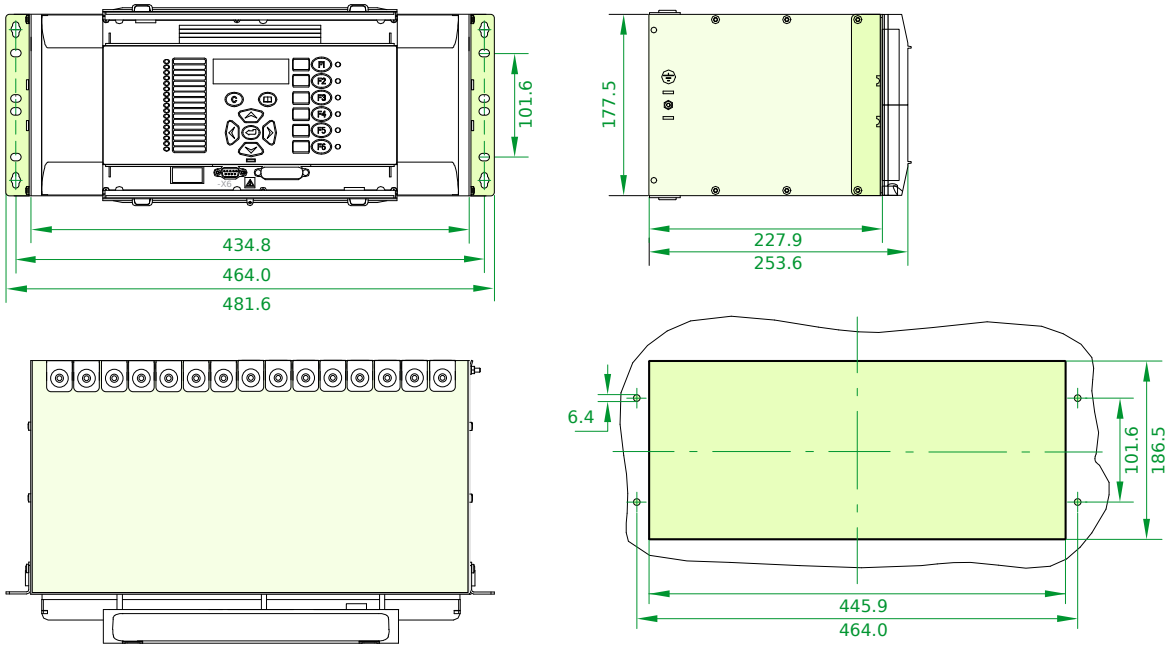

Fig. 4-7: Flush-mounted case 84 TE with panel opening, flush-mount method 2 (with angle brackets and frame). (Dimensions in mm.)

The device has increased mechanical robustness if flush-mount method 2 (with angle brackets and frame) is used for the flush-mounted case.

4.2.3 Detachable HMI

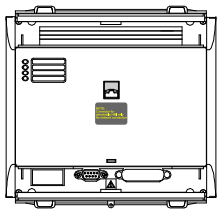

Fig. 4-8: View of case 40 TE for connection of detachable HMI.

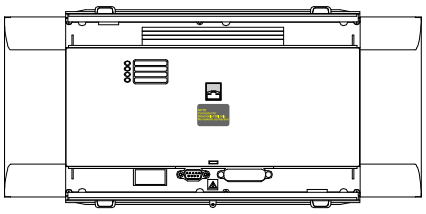

Fig. 4-9: View of case 84 TE for connection of detachable HMI.

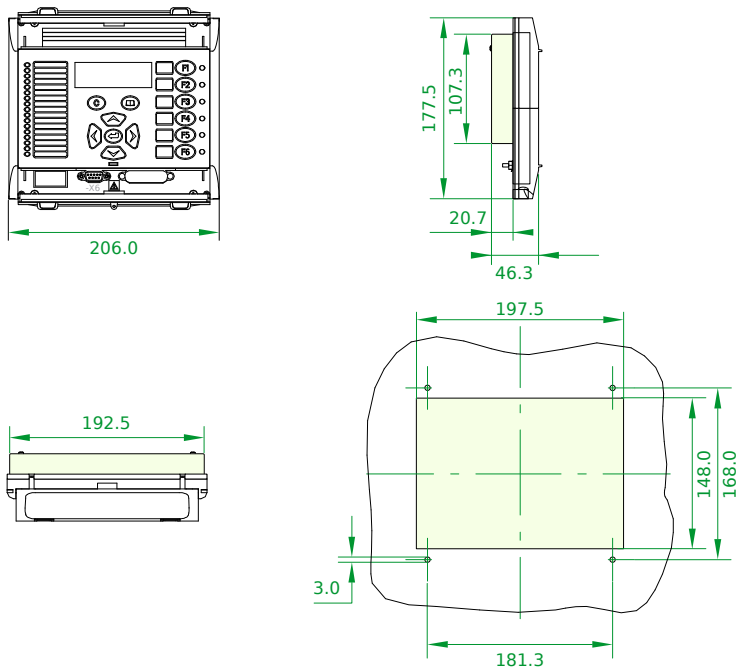

Fig. 4-10: Detachable HMI with panel opening.

4.3 Hardware Modules

The P633 is constructed from standard hardware modules. The following table gives an overview of the modules relevant for the P633.

Key:

- ●: standard equipment,
- ○: optional,
- □: depending on order,
- *: Module is not depicted in the terminal connection diagrams (Section 5.7, (p. 5-26)).
- →*xx*: Module has to be fitted into slot number *xx*.
- 1st→*xx*, 2nd→*yy* [etc.]: If several modules of the same type may be ordered, these must be fitted into the appropriate slots in a particular order: If only one has been ordered it must be fitted into slot *xx* (i. e. slot *yy* is **not** permitted). If two modules have been ordered these must be fitted into slots *xx* and *yy*, etc.

Type	Item Number	Index		Description	Width	P633 -419	P633 -420	P633 -421
A(CH1 CH2)	009650356	A ff		Serial communication module (for RS 485 wire connection)	4TE	○	○	○
A(CH1 CH2)	009650355	A ff		Serial communication module (for plastic fiber)	4TE	○	○	○
A(CH1 CH2)	009650354	A ff		Serial communication module (for glass fiber, ST connector)	4TE	○	○	○
A(SEB LC)	009652162	A ff		Single IP Ethernet module (100 Mbit/s, glass fiber LC connector, 2nd wire RJ45)	4TE	○	○	○
A(SEB RJ45)	009652161	A ff		Single IP Ethernet module (100 Mbit/s, wire RJ45)	4TE	○	○	○
A(REB LC)	009652160	A ff		Redundant IP Ethernet module (100 Mbit/s, glass fiber LC connector, PRP/HSR/RSTP switchable, 2nd wire RJ45)	4TE	○	○	○
A(REB RJ45)	009652159	A ff		Redundant IP Ethernet module (100 Mbit/s, wire RJ45, PRP/HSR/ RSTP switchable, 2nd wire RJ45)	4TE	○	○	○
B	000336187	D ff	*	Bus module (digital, for 40 TE device)	4TE	●		
B	000336188	C ff	*	Bus module (digital, for 84 TE device)	4TE		●	●
B	000337870	D ff	*	Bus module (analog)	4TE	●	●	●
L	009651473	C ff	*	Local control module (DHMI text display, European)	4TE	□	□	□
L	009651474	B ff	*	Local control module (DHMI text display, Cyrillic)	4TE	□	□	□
L	009650561	D ff	*	DHMI Adapter Board	4TE	□	□	□
L	009650563	F ff	*	Processor Unit Adapter Board	4TE	□	□	□
P	009651571		*	Processor Unit	4TE	●	●	●
T(4J)	009650328	A ff	*	Transformer module 4 x J (pin connection)	8TE	□	□	□
T(4J)	009650329	A ff	*	Transformer module 4 x J (ring connection)	8TE		□	□

Type	Item Number	Index		Description	Width	P633 -419	P633 -420	P633 -421
T(4J 1V)	009650311	A ff	*	Transformer module 4 x J, 1 x V (pin connection)	8TE	☐	☐	☐
T(4J 1V)	009650325	A ff	*	Transformer module 4 x J, 1 x V (ring connection)	8TE		☐	☐
V(4I 8O)	009651534	B ff		Power supply module 24 ... 60 V DC, standard variant (switching threshold 18 V)	4TE	☐	☐	☐
V(4I 8O)	009651536	B ff		Power supply module 24 ... 60 V DC, switching threshold 73 V	4TE	☐	☐	☐
V(4I 8O)	009651537	B ff		Power supply module 24 ... 60 V DC, switching threshold 90 V	4TE	☐	☐	☐
V(4I 8O)	009651539	B ff		Power supply module 24 ... 60 V DC, switching threshold 155 V	4TE	☐	☐	☐
V(4I 8O)	009651538	B ff		Power supply module 24 ... 60 V DC, switching threshold 146 V	4TE	☐	☐	☐
V(4I 8O)	009651544	B ff		Power supply module 60 ... 250 V DC / 100 ... 230 V AC, standard variant (switching threshold 18 V)	4TE	☐	☐	☐
V(4I 8O)	009651546	B ff		Power supply module 60 ... 250 V DC / 100 ... 230 V AC, switching threshold 73 V	4TE	☐	☐	☐
V(4I 8O)	009651547	B ff		Power supply module 60 ... 250 V DC / 100 ... 230 V AC, switching threshold 90 V	4TE	☐	☐	☐
V(4I 8O)	009651549	B ff		Power supply module 60 ... 250 V DC / 100 ... 230 V AC, switching threshold 155 V	4TE	☐	☐	☐
V(4I 8O)	009651548	B ff		Power supply module 60 ... 250 V DC / 100 ... 230 V AC, switching threshold 146 V	4TE	☐	☐	☐
X(24I)	000337612	A ff		Binary I/O module (24 binary inputs), Standard variant with switching threshold at 65% of 24 VDC (VA,min)	4TE		○	○
X(24I)	009651304	A ff		Binary I/O module (24 binary inputs), Special variant with switching threshold at 65% of 110 VDC (VA,nom)	4TE		○	○

Type	Item Number	Index	Description	Width	P633 -419	P633 -420	P633 -421
X(24I)	009651332	A ff	Binary I/O module (24 binary inputs), Special variant with switching threshold at 65% of 127 VDC (VA,nom)	4TE		○	○
X(24I)	009651443	A ff	Binary I/O module (24 binary inputs), Special variant with switching threshold at 65% of 220 VDC (VA,nom)	4TE		○	○
X(24I)	009651360	A ff	Binary I/O module (24 binary inputs), Special variant with switching threshold at 65% of 250 VDC (VA,nom)	4TE		○	○
X(4H)	009651493	B ff	Binary module (4 high-break contacts)	4TE	○	○	○
X(6I 6O)	000337377	E ff	Binary I/O module (6 binary inputs, 6 output relays), Standard variant with switching threshold at 65% of 24 VDC (VA,min)	4TE	○	○	○
X(6I 6O)	009651305	A ff	Binary I/O module (6 binary inputs, 6 output relays), Special variant with switching threshold at 65% of 110 VDC (VA,nom)	4TE	○	○	○
X(6I 6O)	009651333	A ff	Binary I/O module (6 binary inputs, 6 output relays), Special variant with switching threshold at 65% of 127 VDC (VA,nom)	4TE	○	○	○
X(6I 6O)	009651444	A ff	Binary I/O module (6 binary inputs, 6 output relays), Special variant with switching threshold at 65% of 220 VDC (VA,nom)	4TE	○	○	○
X(6I 6O)	009651361	A ff	Binary I/O module (6 binary inputs, 6 output relays), Special variant with switching threshold at 65% of 250 VDC (VA,nom)	4TE	○	○	○

Type	Item Number	Index	Description	Width	P633 -419	P633 -420	P633 -421
X(6I 3O)	009651512	B ff	Binary I/O module (6 binary inputs, 3 output relays), Standard variant with switching threshold at 65% of 24 VDC (VA,min)	4TE	○	○	○
X(6I 3O)	009651513	B ff	Binary I/O module (6 binary inputs, 3 output relays), Special variant with switching threshold at 65% of 110 VDC (VA,nom)	4TE	○	○	○
X(6I 3O)	009651514	B ff	Binary I/O module (6 binary inputs, 3 output relays), Special variant with switching threshold at 65% of 127 VDC (VA,nom)	4TE	○	○	○
X(6I 3O)	009651516	B ff	Binary I/O module (6 binary inputs, 3 output relays), Special variant with switching threshold at 65% of 220 VDC (VA,nom)	4TE	○	○	○
X(6I 3O)	009651515	B ff	Binary I/O module (6 binary inputs, 3 output relays), Special variant with switching threshold at 65% of 250 VDC (VA,nom)	4TE	○	○	○
X(6I 8O)	000336971	D ff	Binary I/O module (6 binary inputs, 8 output relays), Standard variant with switching threshold at 65% of 24 VDC (VA,min)	4TE		○	○
X(6I 8O)	009651306	A ff	Binary I/O module (6 binary inputs, 8 output relays), Special variant with switching threshold at 65% of 110 VDC (VA,nom)	4TE		○	○
X(6I 8O)	009651334	A ff	Binary I/O module (6 binary inputs, 8 output relays), Special variant with switching threshold at 65% of 127 VDC (VA,nom)	4TE		○	○

Type	Item Number	Index	Description	Width	P633 -419	P633 -420	P633 -421
X(6I 8O)	009651445	A ff	Binary I/O module (6 binary inputs, 8 output relays), Special variant with switching threshold at 65% of 220 VDC (VA,nom)	4TE		○	○
X(6I 8O)	009651362	A ff	Binary I/O module (6 binary inputs, 8 output relays), Special variant with switching threshold at 65% of 250 VDC (VA,nom)	4TE		○	○
X(6O)	000336973	B ff	Binary module (6 output relays)	4TE	○	○	○
Y(4I)	000337406	D ff	Analog I/O module, standard variant (switching threshold 18 V)	4TE		○	○
Y(4I)	009651307	A ff	Analog I/O module, switching threshold 73 V	4TE		○	○
Y(4I)	009651335	A ff	Analog I/O module, switching threshold 90 V	4TE		○	○
Y(4I)	009651446	A ff	Analog I/O module, switching threshold 146 V	4TE		○	○
Y(4I)	009651363	A ff	Analog I/O module, switching threshold 155 V	4TE		○	○

The space available for the modules measures 4 HE in height by 40 TE or 84 TE in width (HE = 44.45 mm, TE = 5.08 mm).

The location of the individual modules and the position of the threaded terminal blocks in the P633 are shown in the location figures and terminal connection diagrams (Section 5.7, (p. 5-26)).

5 Installation and Connection

DANGER

HAZARD OF ELECTRIC SHOCK, EXPLOSION, OR ARC FLASH

- When electrical equipment is in operation, dangerous voltage will be present in certain parts of the equipment.
- Proper and safe operation of this device depends on appropriate shipping and handling, proper storage, installation and commissioning, and on careful operation, maintenance and servicing. For this reason only qualified personnel shall work on or operate this device.

Failure to follow these instructions will result in death or serious injury.

DANGER

HAZARD OF ELECTRIC SHOCK, EXPLOSION, OR ARC FLASH

- Switch off the auxiliary power supply before any work in the terminal strip area.
- Switch off all the power supplies in connection to the equipment before any work in the terminal strip area to isolate the device.
- Do not touch the terminal strip area when equipment is in operation.
- Do not remove or add wires in the terminal strip area when equipment is in operation.
- Short-circuit the system current transformers before disconnecting wires to the transformer board (valid only for pin terminals, not required for ring terminals which have a shortening block).
- A protective conductor (ground/earth) of at least 1.5 mm^2 must be connected to the protective conductor terminal on the power supply board and on the main relay case.
- Do never remove the protective conductor connection to the device casing as long as other wires are connected to it.
- Where stranded conductors are used, insulated crimped wire end ferrules must be employed.

Failure to follow these instructions will result in death or serious injury.

Note: Regarding the appropriate wiring connections of the equipment refer to the document Px3x_Grounding_Application_Guide_EN_h.pdf.

⚠ WARNING

HAZARD OF UNSAFE OPERATION

- The user should be familiar with the warnings in the Safety Guide (SFTY/5LM/L11 or later version) before working on the equipment.
- The user should be familiar with the safety messages in Chapter 5, Chapter 10, Chapter 11 and Chapter 12 and with the content of Chapter 13 of this technical manual, before working on the equipment.
- Proper and safe operation of this device depends on appropriate shipping and handling, proper storage, installation and commissioning, and on careful operation, maintenance and servicing. For this reason only qualified personnel shall work on or operate this device.
- Any modifications to this device must be in accordance with the manual. If any other modification is made without the express permission of Schneider Electric, it will invalidate the warranty, and may render the product unsafe.

Failure to follow these instructions can result in unintended equipment operation.

The signals MAIN: Blocked/faulty and SFMON: Warning (LED) are permanently assigned to the LEDs labeled OUT OF SERVICE and ALARM and can be assigned to output relays to indicate the health of the device.

It is recommended that the signals MAIN: Blocked/faulty and SFMON: Warning (LED) are communicated to the substation automation system for alarm purposes, using hardwiring via output relays or the communication interface.

⚠ DANGER

HAZARD OF ELECTRIC SHOCK, EXPLOSION, OR ARC FLASH

In case of usage of the equipment with DHMI:

- A protective conductor (ground/earth) of at least 1.5 mm^2 (US: AWG14 or thicker) must be connected to the DHMI protective conductor terminal to link the DHMI and the main relay case; these must be located within the same substation.
- The DHMI communication cable must not be in contact with hazardous live parts.
- The DHMI communication cable must not be routed or placed alongside high-voltage cables or connections. Currents can be induced in the cable which may result in electromagnetic interference.
- We recommend to use only cables of category CAT6 (or better), which has been tested up to a length of 10 m.

Failure to follow these instructions will result in death or serious injury.

⚠ WARNING

HAZARD OF EQUIPMENT DAMAGE OR LIFETIME REDUCTION

- The instructions given in the Section 5.5, (p. 5-14) (“Protective and Operational Grounding”) should be noted. In particular, check that the protective ground connection is secured with a tooth lock washer, as per the diagram “Installing the protective grounding conductor terminal” (Fig. 5-8. (p. 5-15)).
- If a cable screen is added to this connection or removed from it, then the protective grounding should be checked again.

Failure to follow these instructions can result in death, serious injury or equipment damage.

⚠ WARNING

HAZARD OF EQUIPMENT DAMAGE OR LIFETIME REDUCTION

- Do not sustain exposure to high humidity during storage, the value shall not exceed 75 % relative humidity.
- Once the device has been unpacked, it is recommended to energize it within the three following months.
- The device has to be energized at least once in 4 years, if it is not in permanent operation.
- Where electrical equipment is being installed, sufficient time should be allowed for acclimatization to the ambient temperature of the environment before energization.

Failure to follow these instructions can result in equipment damage, unintended equipment operation or reduction of equipment lifetime.

5.1 Unpacking and Packing

All P633 devices are packaged separately into dedicated cartons and shipped with outer packaging. Our products leave our factory in closed, sealed original packaging. If at receipt of the delivery the transport packaging is open or the seal is broken, the confidentiality and authenticity of the information contained in the products cannot be ensured.

Use special care when opening cartons and unpacking devices, and do not use force. In addition, make sure to remove supporting documents and the type identification label supplied with each individual device from the inside carton. The design revision level of each module included in the device when shipped can be determined from the list of components (assembly list). This list of components should be filed carefully.

After unpacking, each device should be inspected visually to confirm it is in proper mechanical condition.

If the P633 needs to be shipped, both inner and outer packaging must be used. If the original packaging is no longer available, make sure that packaging conforms to DIN ISO 2248 specifications for a drop height ≤ 0.8 m.

5.2 Checking Nominal Data and Design Type

The nominal data and design type of the P633 can be determined by checking the type identification label (see below). One type identification label is located under the upper hinged cover on the front panel and a second label can be found on the inside of the device. Another copy of the type identification label is fixed to the outside of the P633 packaging.

Fig. 5-1: Example of the type identification label of a device from the Easergy MiCOM 30 family.

The P633 design version can be determined from the order number. A breakdown of the order number is given in Chapter “Order Information” (Chapter 15, (p. 15-1)).

5.3 Location Requirements

The P633 has been designed to conform to EN 60255-6. Therefore it is important when choosing the installation location to make certain that it provides the operating conditions as specified in above DIN norm sections 3.2 to 3.4. Several of these important operating conditions are listed below.

5.3.1 Environmental Conditions

Ambient temperature:	-5 °C to +55 °C [+23 °F to +131 °F]
Air pressure:	800 to 1100 hPa
Relative humidity:	The relative humidity must not result in the formation of either condensed water or ice in the P633.
Ambient air:	The ambient air must not be significantly polluted by dust, smoke, gases or vapors, or salt.
Solar Radiation:	Direct solar radiation on the front of the device must be avoided to ensure that the LC-Display remains readable.

5.3.2 Mechanical Conditions

Vibration stress:	10 to 60 Hz, 0.035 mm and 60 to 150 Hz, 0.5 g
Earth quake resistance:	5 ... 8 Hz, 3.5 mm / 1.5 mm, 8 ... 35 Hz, 5 m/s², 3 x 1 cycle

5.3.3 Electrical Conditions for Auxiliary Voltage of the Power Supply

Operating range: 0.8 to 1.1 $V_{A,nom}$ with a residual ripple of up to 12 % $V_{A,nom}$

5.3.4 Electromagnetic Conditions

Substation secondary system design must follow the best of modern practices, especially with respect to grounding and EMC.

5.4 Installation

The dimensions and mounting dimensions for surface-mounted cases are given in Section 4.2, (p. 4-4). When the P633 is surface-mounted on a panel, the wiring to the P633 is normally run along the front side of the mounting plane. If the wiring is to be at the back, an opening can be provided above or below the surface-mounted case. Fig. 5-2, (p. 5-7) shows such an opening.

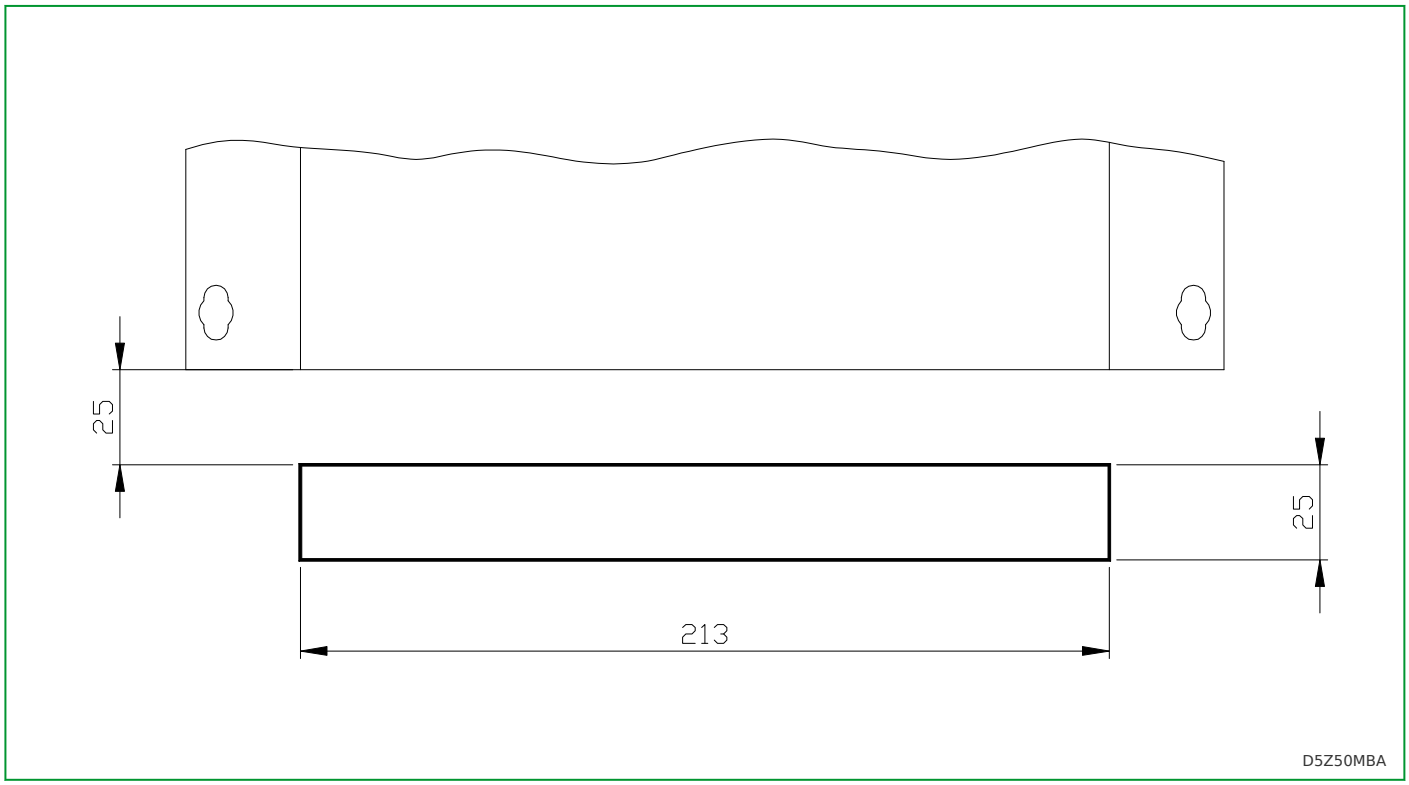

Fig. 5-2: Opening (cutout) for running the connecting leads to an 40 TE surface-mounted case.

The opening width for the 40 TE surface-mounted case: 213 mm (shown in this figure), for the 84 TE surface-mounted case: 435 mm. The other dimensions are the same for all cases.

Flush-mounted cases are designed for control panels. The dimensions and mounting dimensions are given in Chapter “Design”. When the P633 is mounted on a cabinet door, special sealing measures are necessary to provide the degree of protection required for the cabinet (IP 51).

Connection of protective grounding conductor: See “Protective and Operational Grounding” (Section 5.5, (p. 5-14))

Instructions for selecting the flush-mount method:

The P633 has increased mechanical robustness if either the surface-mounted case or – for the flush-mounted case – flush-mount method 2 (with angle brackets and frame) is used. In this case, test severity class 2 of the vibration test, test severity class 2 of the shock response test on operability as well as test severity class 1 of the shock response test on permanent shock are applied additionally.

Dimensions of the panel cutouts:

Dimensional drawings of the panel cutouts for all cases and for the detachable HMI can be found in Section 4.2, (p. 4-4).

For flush-mount method 1 (without angle brackets and frame), the procedure is as follows:

Before the P633 can be installed into a control panel, the local control panel (or the front element of the case for devices with detachable display) must be taken down. The local control panel is removed as described below:

1. Remove both top and bottom hinged flaps from the device. (Lift/lower both hinged flaps 180° up/down. Hold them in the middle and bend them slightly. The side mountings of both hinged flaps can then be disengaged.)
2. Remove the M3.5 screws (see Fig. 5-3, (p. 5-9)).
3. Then remove the local control panel.

⚠ WARNING

HAZARD OF EQUIPMENT DAMAGE

- The local control panel (or front element) is connected to processor module P by a plug-in connecting cable. Make sure the connector position is correct. Do not bend the connecting cable!

Failure to follow these instructions can result in equipment damage or unintended equipment operation.

Then remove the lower M4 screws and only loosen the upper M4 screws (see Fig. 5-3, (p. 5-9)). Now insert the P633 into the panel opening from the rear so that the upper M4 screws fit into the corresponding holes. Then tighten all the M4 screws. After this, replace the local control panel.

NOTICE

HAZARD OF EQUIPMENT DAMAGE

- When replacing the local control panel, take care not to tighten the screws with too much strength! (Fastening torque 1.5 to 1.8 Newton meters).
- If the control panel thickness is ≥ 2 mm, the longer screws as enclosed within the device packing must be used.

Failure to follow these instructions can result in equipment damage.

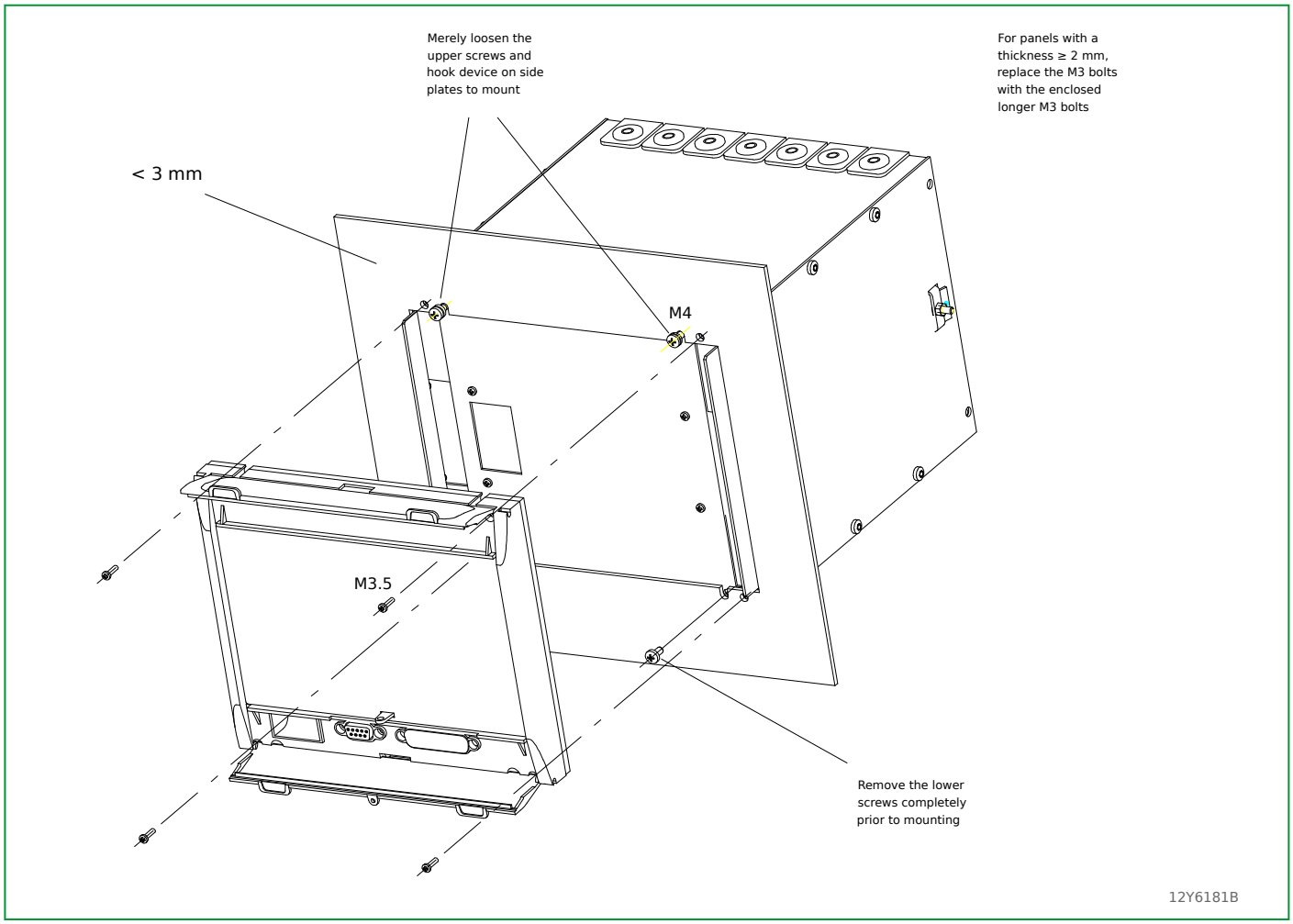

Fig. 5-3: Installation of a case into a control panel. Flush-mount method 1 (without the angle brackets and frame). Example for a device with a 40 TE case.

NOTICE

HAZARD OF EQUIPMENT DAMAGE

- The equipment provides increased mechanical robustness if either the surface-mounted case or for the flush-mounted case flush-mount method 2 (with angle brackets and frame, see Fig. 5-5, (p. 5-10)) is used.

Failure to follow these instructions can result in equipment damage.

⚠⚠ DANGER

HAZARD OF ELECTRIC SHOCK, EXPLOSION, OR ARC FLASH

- Secure connection of protective grounding conductor: See Section 5.5, (p. 5-14).

Failure to follow these instructions will result in death or serious injury.

For flush-mount method 2 (using the angle brackets and frame), the procedure is as follows:

1. Remove the screws as shown in Fig. 5-4, (p. 5-10), ① and mount the enclosed angle brackets using these same screws.
2. Then push the device into the control panel cutout from the front.
3. Secure the device to the control panel by using the enclosed M6 screws (see Fig. 5-5, (p. 5-10)).
4. Assemble the cover frame and snap-fasten onto the fixing screws.

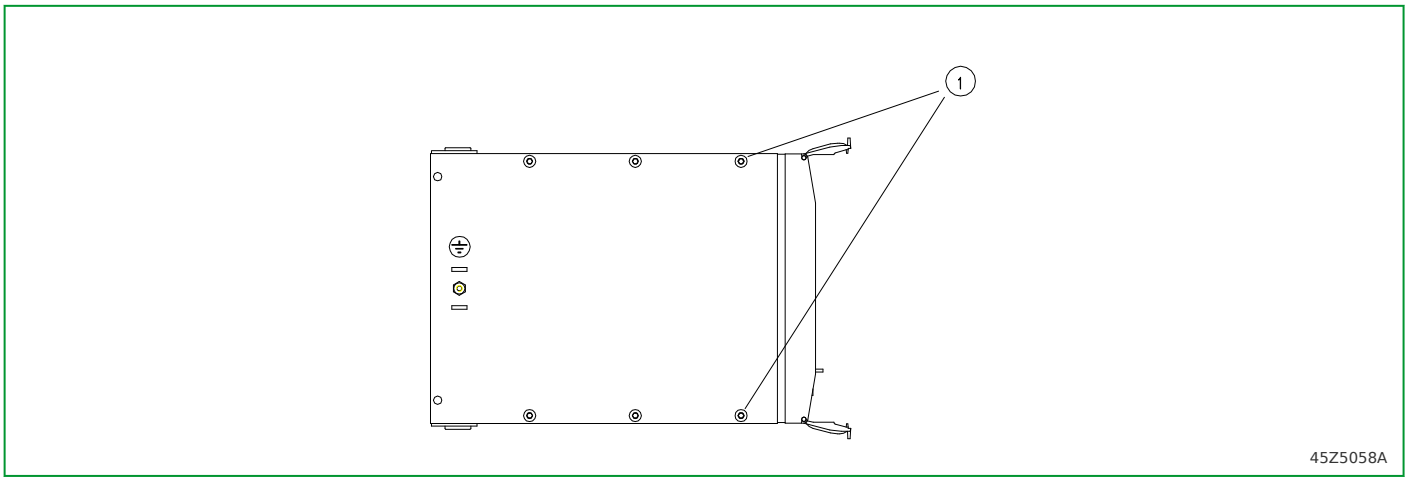

Fig. 5-4: Mounting the angle brackets.

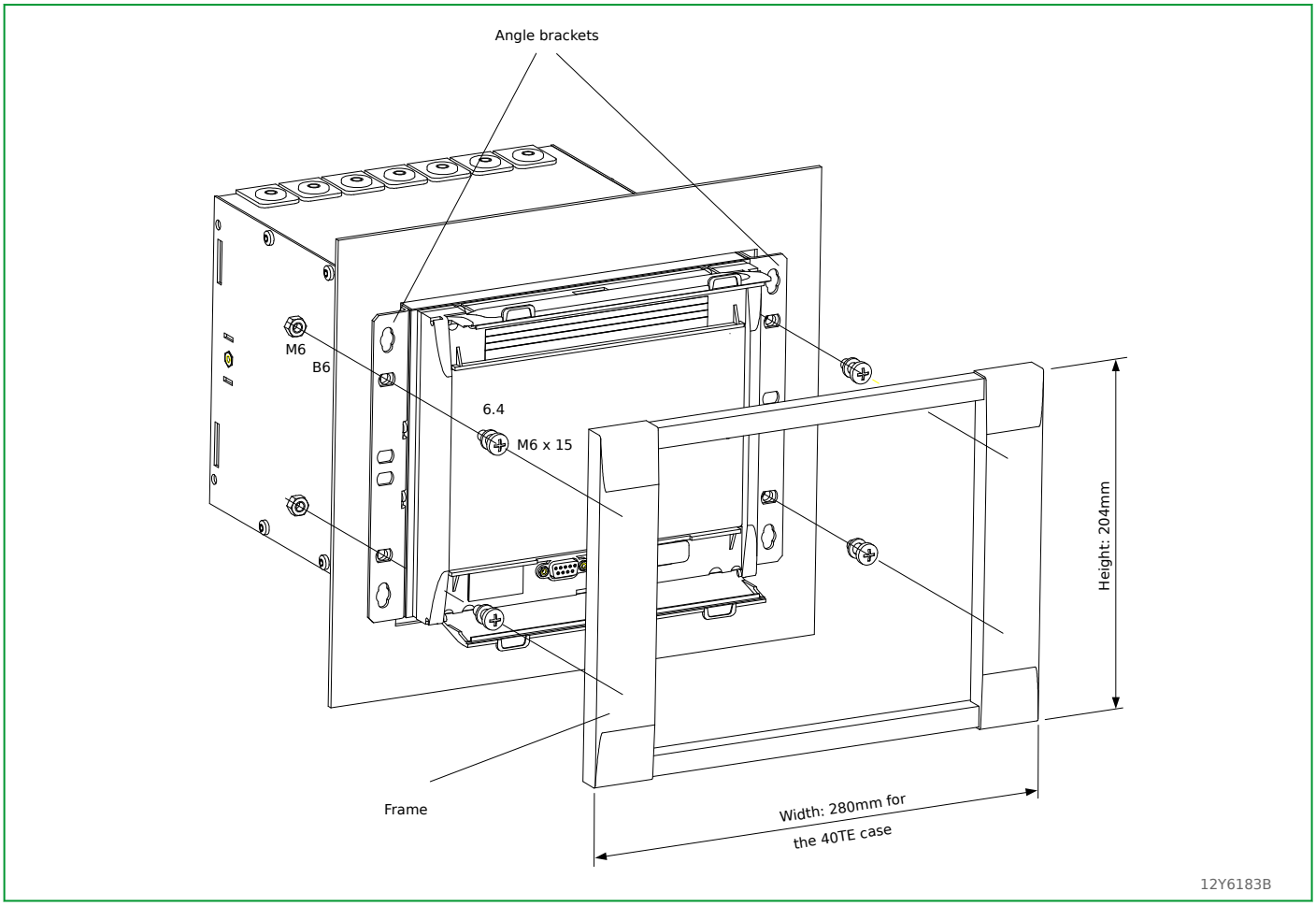

Fig. 5-5: Installation of a case into a control panel, flush-mount method 2 (with angle brackets and frame). Example for a device in a 40 TE case.

The cover frame width of the 40 TE surface-mounted case is: 280 mm, of the 84 TE case is: 486 mm. The cover frame height is for all cases: 204 mm.

NOTICE

HAZARD OF EQUIPMENT DAMAGE

- The equipment provides increased mechanical robustness if either the surface-mounted case or for the flush-mounted case flush-mount method 2 (with angle brackets and frame, see Fig. 5-5, (p. 5-10)) is used.

Failure to follow these instructions can result in equipment damage.

DANGER

HAZARD OF ELECTRIC SHOCK, EXPLOSION, OR ARC FLASH

- Secure connection of protective grounding conductor: See Section 5.5, (p. 5-14).

Failure to follow these instructions will result in death or serious injury.

A rack mounting kit can be used to combine a flush-mounted 40 TE case with a second sub-rack to form a 19″ mounting rack (see Fig. 5-6, (p. 5-12)). The second sub-rack can be another device, for example, or an empty sub-rack with a blank front panel. Fit the 19″ mounting rack to a cabinet as shown in Fig. 5-7, (p. 5-13).

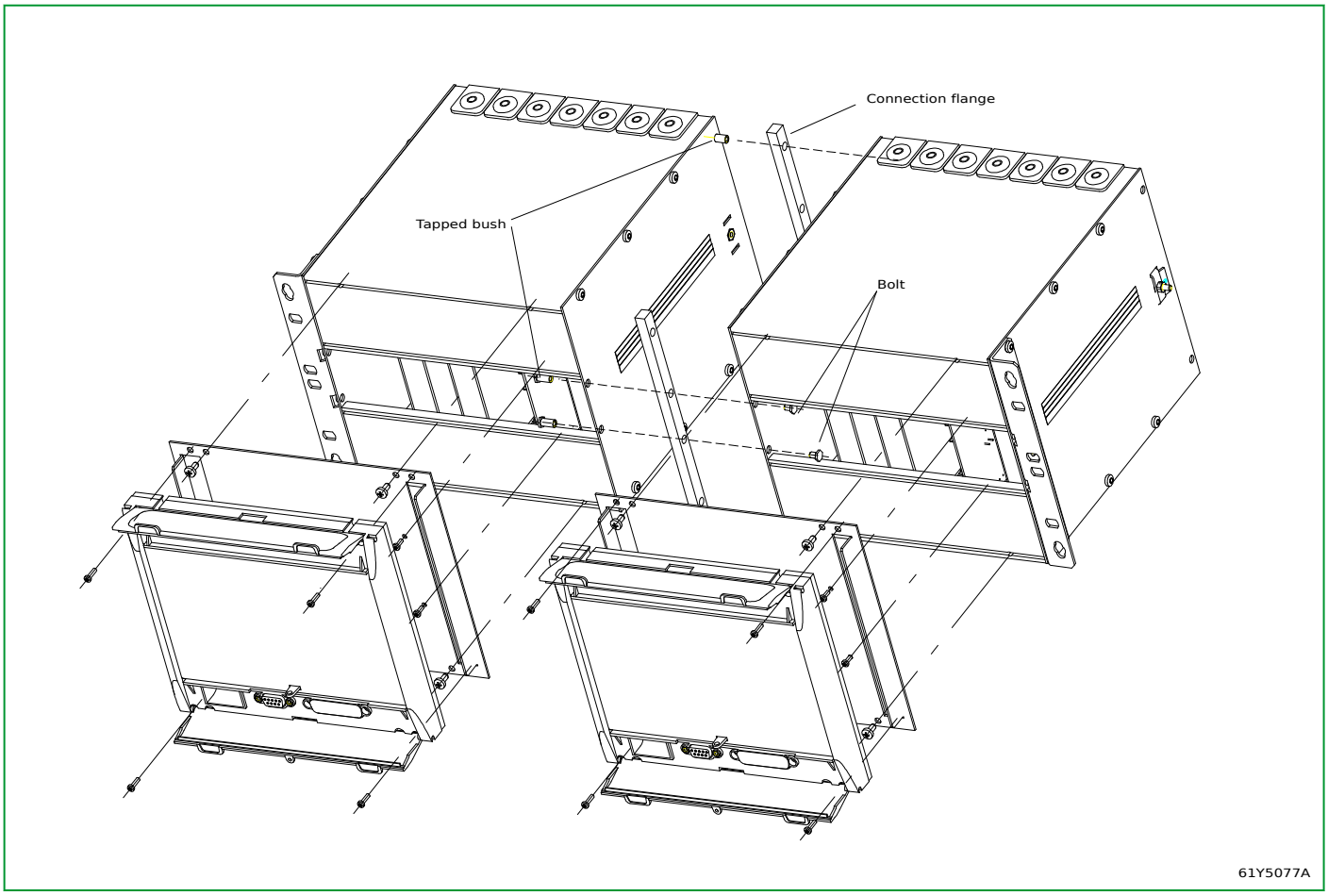

Fig. 5-6: Combining 40 TE flush-mounted cases to form a 19″ mounting rack.

DANGER

HAZARD OF ELECTRIC SHOCK, EXPLOSION, OR ARC FLASH

- Secure connection of protective grounding conductor: See Section 5.5, (p. 5-14).

Failure to follow these instructions will result in death or serious injury.

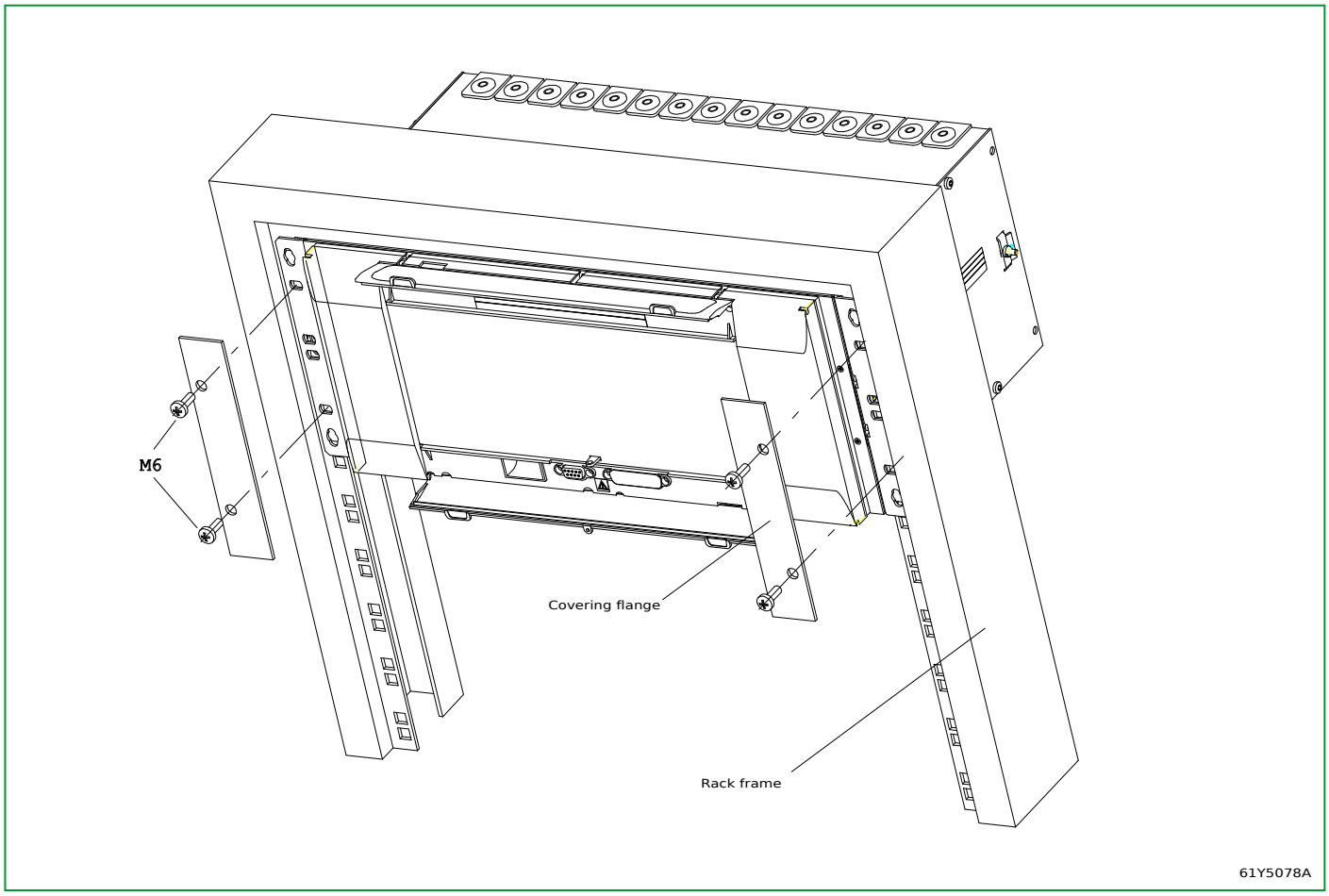

Fig. 5-7: Installing the P633 in a cabinet with a 19″ mounting rack.

DANGER

HAZARD OF ELECTRIC SHOCK, EXPLOSION, OR ARC FLASH

- Secure connection of protective grounding conductor: See Section 5.5, (p. 5-14).

Failure to follow these instructions will result in death or serious injury.

5.5 Protective and Operational Grounding

⚠⚠ DANGER

HAZARD OF ELECTRIC SHOCK, EXPLOSION, OR ARC FLASH

- The device must be reliably grounded to meet protective equipment grounding requirements.
- The surface-mounted case is grounded using the bolt and nut, appropriately marked, as the ground connection. The flush-mounted case must be grounded in the area of the rear sidepieces at the location provided. The bracket is marked with the protective ground symbol: ⏚. The cross-section of the ground conductor must conform to applicable national standards. A minimum cross section of 2.5 mm² (≤ AWG12) is required.
- In addition, a protective ground connection at the terminal contact on the power supply module (identified by the letters “PE” on the terminal connection diagram) is also required for proper operation of the device. The cross-section of this ground conductor must also conform to applicable national standards. A minimum cross section of 1.5 mm² (US: AWG14 or thicker) is required.
- If a detachable HMI is installed, a further protective conductor (ground/earth) of at least 1.5 mm² (US: AWG14 or thicker) must be connected to the DHMI protective conductor terminal to link the DHMI and the main relay case; these must be located within the same substation.
- All grounding connections must be low-inductance, i.e. it must be kept as short as possible.
- The protective conductor (earth) must always be connected to the protective grounding conductor terminal in order to guarantee the safety given by this setup.

Failure to follow these instructions will result in death or serious injury.

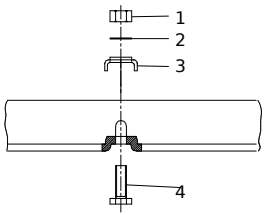

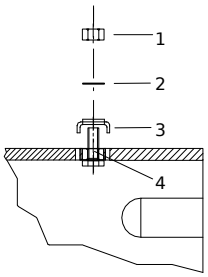

PE terminal surface-mount. case	
Pos.	Description
1	Nut M4
2	Tooth lock wash.A4.3
3	Clamp bracket
4	Bolt M4

PE terminal flush-mount. case	
Pos.	Description
1	Nut M4
2	Tooth lock wash.A4.3
3	Clamp bracket
4	Bolt M4

19Y5220B

Fig. 5-8: Installing the protective grounding conductor terminal.

5.6 Connection

The P633 Transformer Differential Protection Device must be connected in accordance with the terminal connection diagram as indicated on the type identification label. The relevant terminal connection diagrams that apply to the P633 are to be found either in the supporting documents supplied with the device, or in Section 5.7, (p. 5-26).

In general copper conductors with a cross section of 2.5 mm² (US: AWG12) are sufficient to connect a system current transformer to a current input on the P633. To reduce CT knee-point voltage requirements, it may be necessary to install shorter copper conductors with a greater cross section between the system current transformers and the current inputs on the P633. Copper conductors having a cross section of 1.5 mm² (US: AWG14) are adequate to connect binary signal inputs, the output relays and the power supply input.

All connections run into the system must always have a defined potential. Connections that are pre-wired but not used should preferably be grounded when binary inputs and output relays are isolated. When binary inputs and output relays are connected to common potential, the pre-wired but unused connections should be connected to the common potential of the grouped connections.

DANGER

HAZARD OF ELECTRIC SHOCK, EXPLOSION, OR ARC FLASH

- When increased-safety machinery is located in a hazardous area the device must always be installed outside of this hazardous area to protect this equipment.

Failure to follow these instructions will result in death or serious injury.

5.6.1 Connecting Measuring and Auxiliary Circuits

5.6.1.1 Power Supply

Before connecting the auxiliary voltage V_A for the P633 power supply, it must be ensured that the nominal value of the auxiliary device voltage corresponds with the nominal value of the auxiliary system voltage.

DANGER

HAZARD OF ELECTRIC SHOCK, EXPLOSION, OR ARC FLASH

- The power supply must be turned off for at least 5 s before power supply module V is removed. Otherwise there is the danger of an electric shock.

Failure to follow these instructions will result in death or serious injury.

5.6.1.2 Current-Measuring Inputs

When connecting the system transformers, it must be ensured that the secondary nominal currents of the system and the device correspond.

DANGER

HAZARD OF ELECTRIC SHOCK, EXPLOSION, OR ARC FLASH

- Do not open the secondary circuit of live system current transformers! If the secondary circuit of a live CT is opened, there is the danger that the resulting voltages will endanger personnel and damage the insulation.
- For pin-terminal connection devices, the terminal block for system current transformer connection is not a shorting block! Therefore always short-circuit the system current transformers before loosening the threaded terminals.

Failure to follow these instructions will result in death or serious injury.

5.6.1.3 Connecting the Measuring Circuits

The system current transformers must be connected in accordance with the standard schematic diagram shown in Fig. 5-9, (p. 5-18). It is essential that the grounding configuration shown in the diagram be followed. If the CT or VT connection is reversed, this can be taken into account when making settings (see Chapter 7, (p. 7-1)).

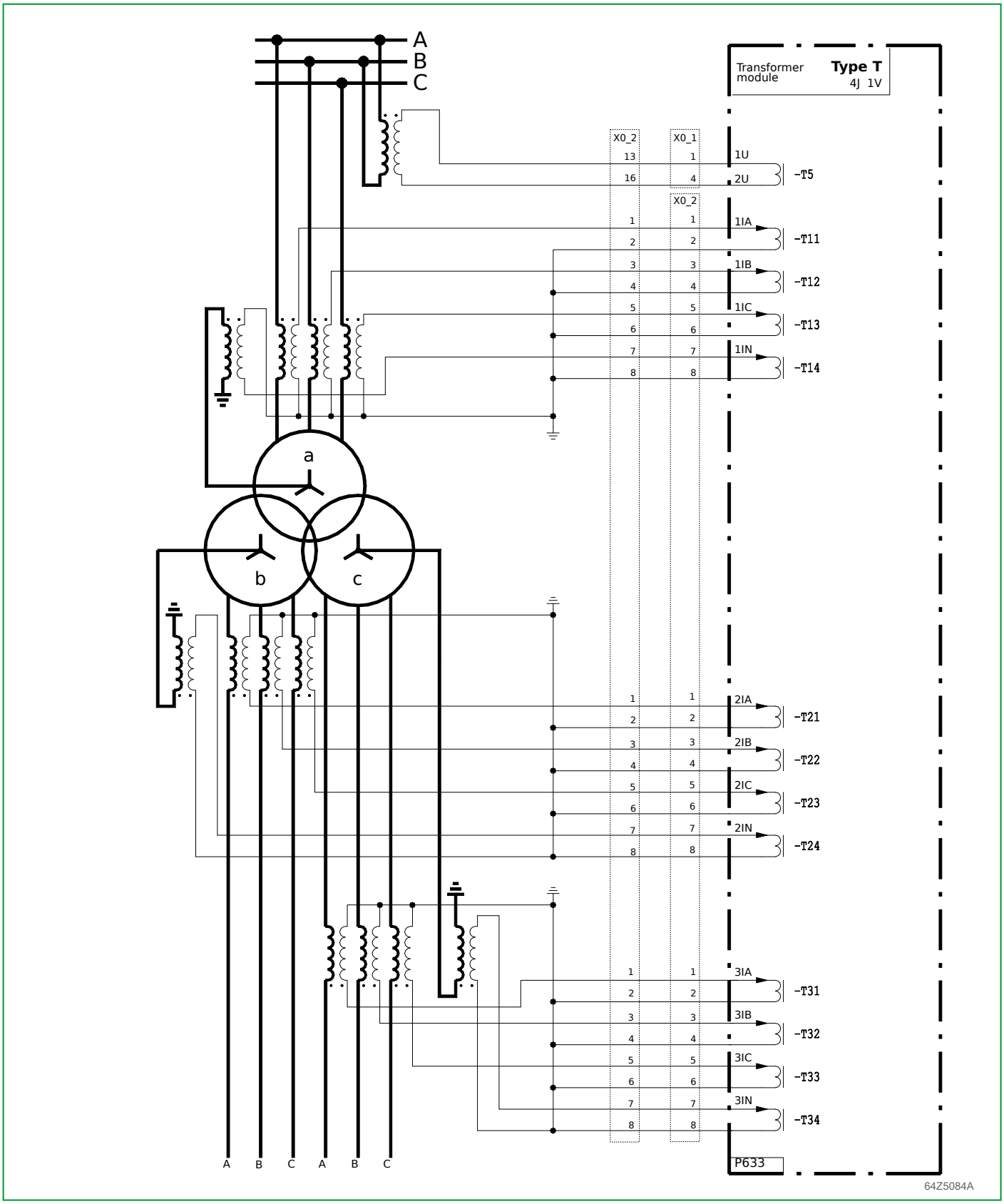

Fig. 5-9: Standard schematic connection diagram for the P633

5.6.1.4 Connecting a Resistance Thermometer

A resistance thermometer can be connected if the device is fitted with analog module Y. This analog I/O module input is designed to connect a PT 100 resistance thermometer. The PT 100 should be connected using the 3-wire method (see Fig. 5-10, (p. 5-19)). No supply conductor compensation is required in this case.

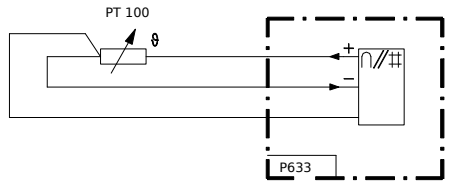

Fig. 5-10: Connecting a PT 100 using the 3-wire method.

5.6.1.5 Connecting Binary Inputs and Output Relays

The binary inputs and output relays are freely configurable. When configuring these components it is important to note that the contact rating of the binary I/O modules (X) varies (see Section 2.5.7, (p. 2-12)).

Once the user has selected a bay type, the P633 can automatically configure the binary inputs and output relays with function assignments for the control of switchgear units. The standard configuration of binary inputs and output relays for each bay type is given in the list of bay types to be found in the Appendix (see Vol. 2, Chapter A5, (p. A5-1)).

The polarity for connected binary signal inputs is to be found in the terminal connection diagrams (see supporting documents supplied with the device or in Section 5.7, (p. 5-26)). This is to be understood as a recommendation only. Connection to binary inputs can be made as desired.

5.6.1.6 Connecting Trip and Close Command Relays

Standard outputs of Px30 aren't supposed to open DC current flowing through inductive CB coil. This task has to be addressed by properly applied CB auxiliary contacts (52a/b).

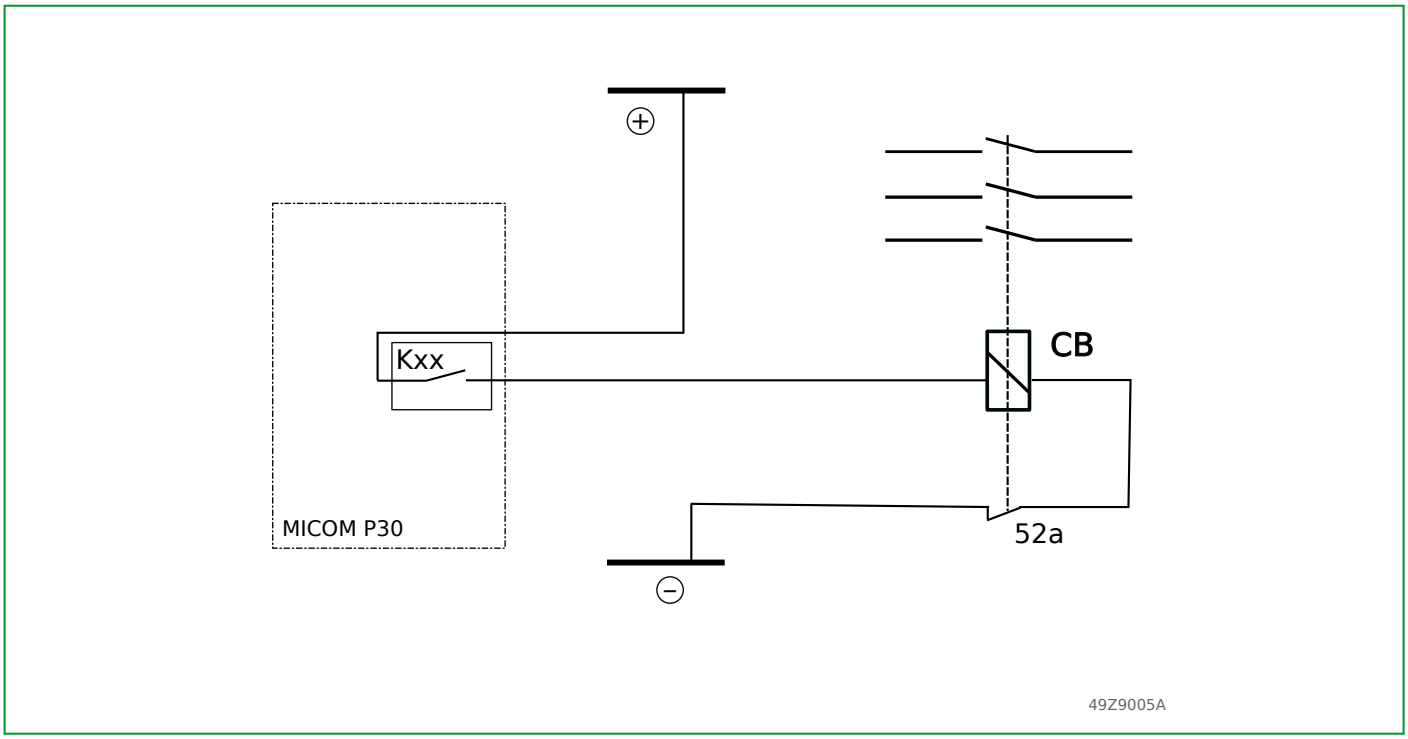

Fig. 5-11: Example of trip circuit wiring.

In order to ascertain that the inductive coil current is switched off from the CB auxiliary contacts, the setting of minimum pulse duration for trip commands (MAIN: Min.dur. trip cmd. 1 etc.) and close command need to consider the operating times of the circuit breaker and its auxiliary contacts. Sufficient margin has to be applied for pulse duration. A common setting is to double operating time of the circuit breaker, e.g. for a CB trip operation time top of 100 ms, the minimum trip pulse time should be 0.2 s (see the following figure).

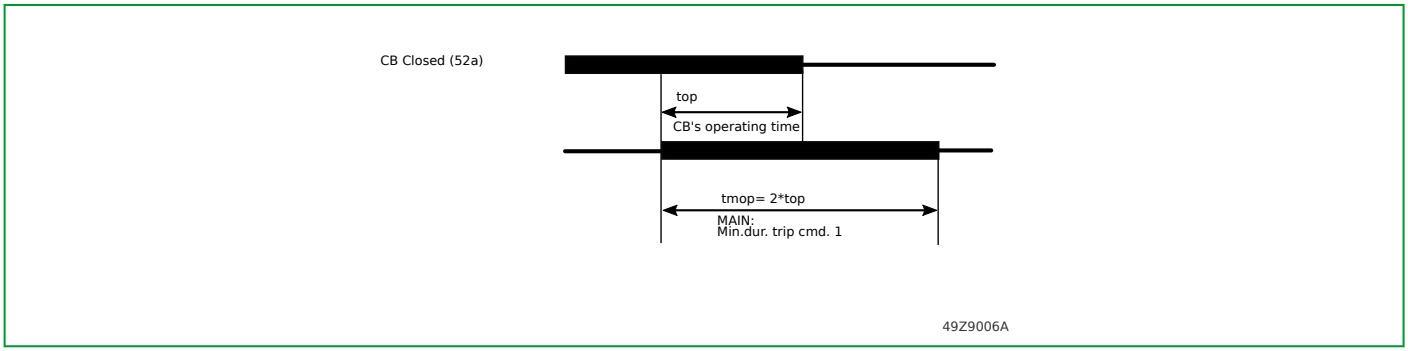

Fig. 5-12: Example of trip pulse timing.

This of course also applies to device open/close command outputs operated with fix (short or long) command duration (e.g. DEVxx Oper. mode cmd. = Short command).

If the Px30 output contact triggers an auxiliary relay which opens or closes the CB consecutively, then it should be verified, that the make/continuous/break coil currents of this auxiliary relay are within the limit values given in Section 2.5.7, (p. 2-12).

Note: Upon testing such command outputs, the CB (or equivalent auxiliary components) must not be mechanically locked, so that the auxiliary 52a/b contact could operate and break the DC current. If the CB has to stay locked, tripping or closing circuit has to be opened by terminal disconnection or test switch.

5.6.2 Connecting the IRIG-B Interface

An IRIG-B interface for time synchronization is available with the Ethernet module. It is connected by a BNC connector. Demodulated and modulated signals can be used.

5.6.3 Connecting the Communication Interfaces

5.6.3.1 PC Interface

The PC interface is provided so that personnel can operate the device from a personal computer (PC).

⚠⚠ DANGER

HAZARD OF ELECTRIC SHOCK, EXPLOSION, OR ARC FLASH

- The PC interface is not designed as a permanent connection. Consequently, the female connector does not have the extra insulation from circuits connected to the system that is required per IEC/EN 60255-27. Therefore DO NOT leave any permanent cable connection on the PC interface connector at the HMI front panel.

Failure to follow these instructions will result in death or serious injury.

⚠ WARNING

UNEXPECTED EQUIPMENT OPERATION

- Do not use a PC with active termination on any connection pin of the RS232 interface. Wrong termination can drive the device to delay operating actions from the HMI as long as this wrong termination is active on the PC interface.

Failure to follow these instructions can result in unintended equipment operation.

5.6.3.2 Communication Interfaces

The communication interfaces are provided as a permanent connection of the device to a control system for substations or to a central substation unit. Depending on the type, communication interface 1 on the device is connected either by a special fiber-optic connector or an RS 485 interface with twisted pair copper wires. Communication interface 2 is only available as an RS 485 interface.

The selection and assembly of a properly cut fiber-optic connecting cable requires special knowledge and expertise and is therefore not covered in this operating manual.

DANGER

HAZARD OF ELECTRIC SHOCK, EXPLOSION, OR ARC FLASH

- Do not connect or disconnect the RS 485 or fiber-optic interface when the supply voltage for the device is under power and in operation.

Failure to follow these instructions will result in death or serious injury.

An RS 485 data transmission link between a master and several slave devices can be established by using the optional communication interface. The communication master could be, for instance, a central control station. Devices linked to the communication master, e.g. P633, are set-up as slave devices.

The RS 485 interface available on the P633 was designed so that data transfer in a full duplex transmission mode is possible using a 4-wire data link between devices. Data transfer between devices using the RS 485 interface is set up only for a half duplex transmission mode. To connect the RS 485 communication interface the following must be observed:

- Only twisted pair shielded cables must be used, that are common in telecommunication installations.
- At least one symmetrical twisted pair of wires is necessary.
- Conductor insulation and shielding must only be removed from the core in the immediate vicinity of the terminal strips and connected according to national standards.
- All shielding must be connected to an effective protective ground surface at both ends.
- Unused conductors must all be grounded at one end.

A 4-wire data link as an alternative to a 2-wire communications link is also possible. A cable with two symmetrical twisted pair wires is required for a 4-wire data link. A 2-wire data link is shown in Fig. 5-13, (p. 5-23), and a 4-wire data link is shown in Fig. 5-14, (p. 5-24) as an example for channel 2 on the communication module. The same is valid if channel 1 on the communication module is available as a RS 485 interface.

2-wire data link:

The transmitter must be bridged with the receiver on all devices equipped electrically with a full duplex communication interface, e.g. the P633. The two devices situated at either far end must have a 200 to 220 Ω resistor installed to terminate the data transmission conductor. In devices from the *Easergy MiCOM 30* family, and also in the P633, a 220 Ω resistor is integrated into the RS 485 interface hardware and can be connected with a wire jumper. An external resistor is therefore not necessary.

4-wire data link:

Transmitter and receiver must be bridged in the device situated on one far end of the data transmission conductor. The receivers of slave devices, that have an electrically full-duplex communication interface as part of their electrical system, e.g. the P633, are connected to the transmitter of the communication master device, and the transmitters of slave devices are connected to the receiver of the master device. Devices equipped electrically with only a half duplex RS 485 communication interface are connected to the transmitter of the communication master device. The last device in line (master or slave device) on the data transmission conductor must have the transmitter and receiver terminated with a 200 to 220 Ω resistor each. In devices from the *Easergy MiCOM 30* family, and also in the P633, a 220 Ω resistor is integrated into the RS 485 interface

hardware and can be connected with a wire jumper. An external resistor is therefore not necessary. The second resistor must be connected externally to the device (resistor order number see Chapter “Accessories and Spare Parts”).

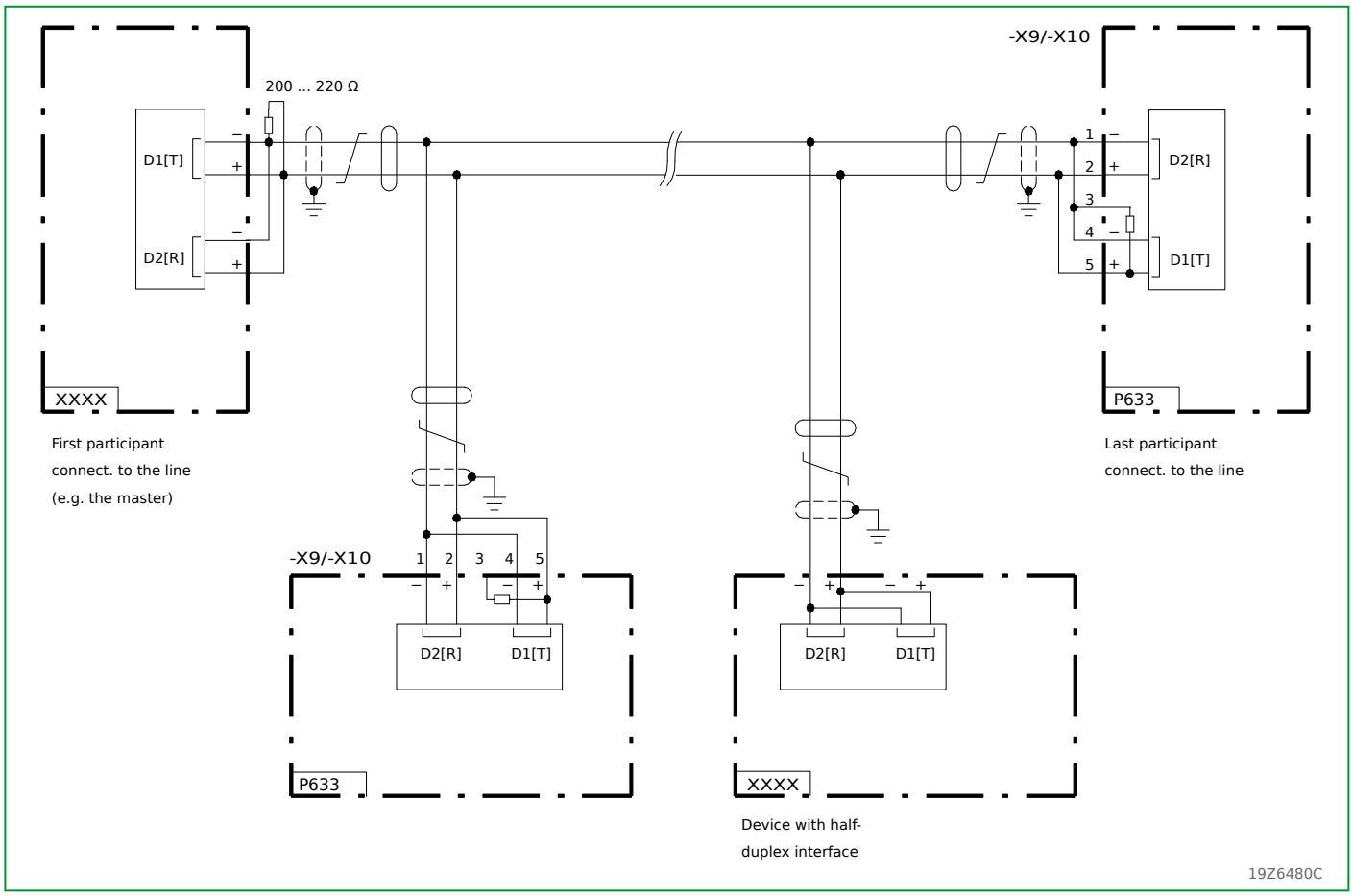

Fig. 5-13: 2-wire data link. (Note: the setting MAIN: Chann.assign.COMM1/2 decides about whether -X9 (=channel 1) or -X10 (=channel 2) is used.)

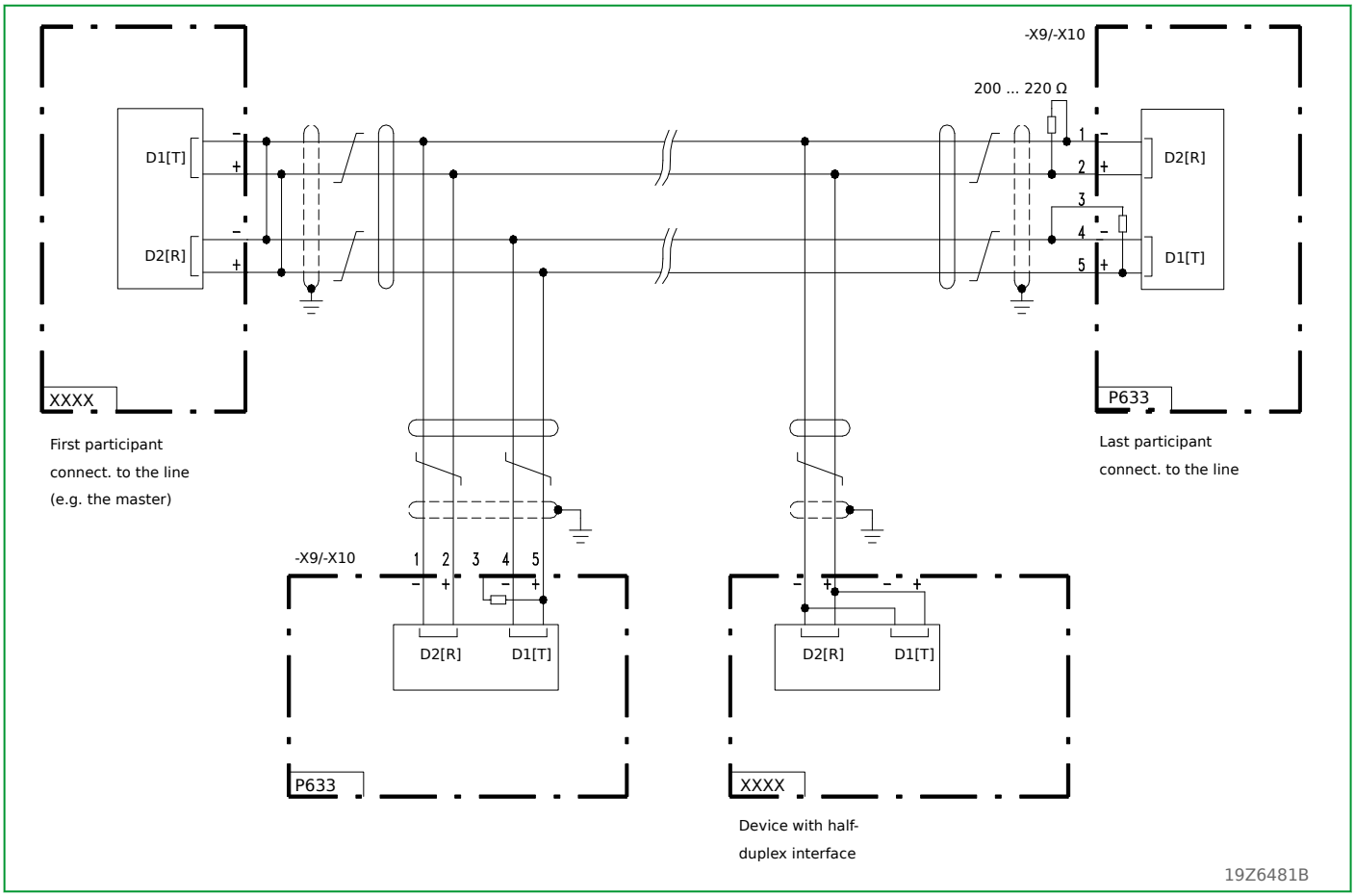

Fig. 5-14: 4-wire data link. (Note: the setting MAIN: Chann.assign.COMM1/2 decides about whether -X9 (=channel 1) or -X10 (=channel 2) is used.)

For CH1/CH2 connection diagram, please refer to *Section 5.7, (p. 5-26)*

5.6.3.3 Ethernet Module Connection

The diagram and the related tables below show the Interface arrangement of Ethernet module, as they are the fiber/copper connectors and IRIG-B connector.

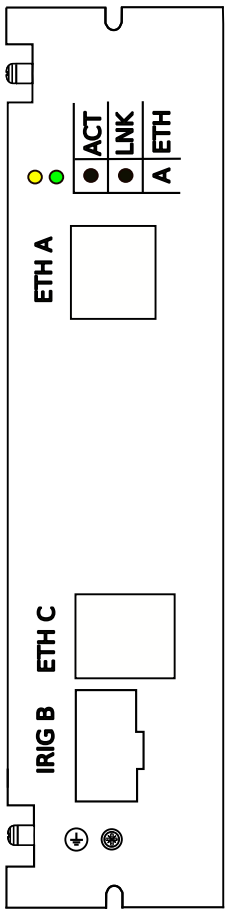

Fig. 5-15: SEB Fiber.

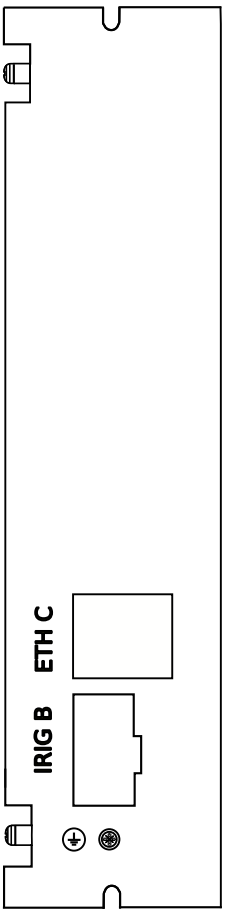

Fig. 5-16: SEB Copper.

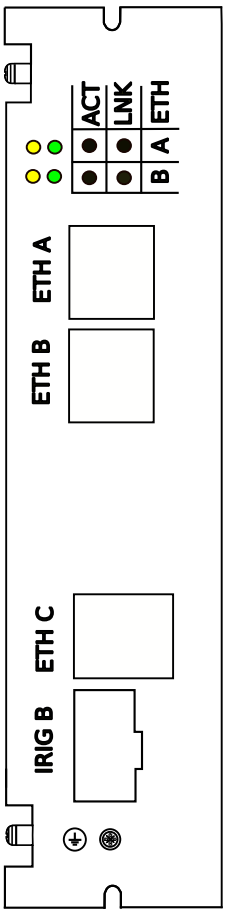

Fig. 5-17: REB Fiber.

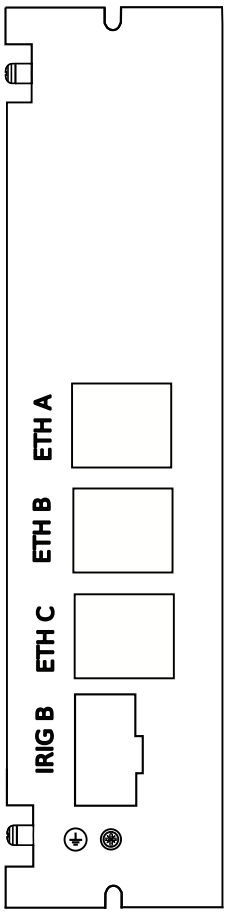

Fig. 5-18: REB Copper.

Connector	Connections
ETH A	Fiber/Copper
ETH B	Fiber/Copper
ETH C	Copper
IRIG-B	Demodulated (DC IRIG-B)/ Modulated (AC IRIG-B)

Tab. 5-1: Connector functionality.

LED	Function	On	Off	Flashing
Green	Link	Link o.k.	Link broken	
Yellow	Activity			Packets received/ emitted

Tab. 5-2: LED functionality.

5.7 Location and Connection Diagrams

5.7.1 Location Diagrams P633-419/420/421

Location diagram for P633 in 40 TE case

- Pin-terminal connection (P633 -419)

01	02	03	04	05	06	07	08	09	10
P	A CH1 CH2 A SEB LC/ RJ45 A REB LC/ RJ45	T 4J 1V		T 4J		T 4J		V 4I 8O	X 4H X 6O X 6I 3O
01	02	03	04	05	06	07	08	09	10

Location diagrams for P633 in 84 TE case

- Pin-terminal connection (P633 -420)

01	02	03	04	05	06	07	08	09	10	11	12	13	14	15	16	17	18	19	20	21
P	A CH1 CH2 A SEB LC/ RJ45 A REB LC/ RJ45	T 4J 1V		T 4J		T 4J			X 6I 8O		Y 4I		X 24I		X 6I 6O X 6I 8O		X 4H X 6O X 6I 3O		V 4I 8O	
01	02	03	04	05	06	07	08	09	10	11	12	13	14	15	16	17	18	19	20	21

- Ring-terminal connection (P633 -421)

01	02	03	04	05	06	07	08	09	10	11	12	13	14	15	16	17	18	19	20	21
P	A CH1 CH2 A SEB LC/ RJ45 A REB LC/ RJ45	T 4J 1V		T 4J		T 4J			X 6I 8O		Y 4I		X 24I		X 6I 6O X 6I 8O		X 4H X 6O X 6I 3O		V 4I 8O	
01	02	03	04	05	06	07	08	09	10	11	12	13	14	15	16	17	18	19	20	21

Each of the numbered slots can be fitted with max. 1 module.
If a location diagram shows several modules for a particular slot, then these are alternatives, depending on the ordering options.

5.7.2 Terminal Connection Diagrams P633-419/420/421

"_" is a placeholder for the slot.
See also Section 5.5, (p. 5-14), "Protection Conductor Terminal (PCT) / Case Grounding / Protective Earth"

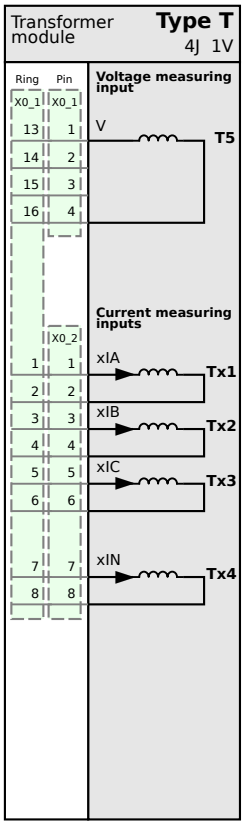
Transformer module
Type T
4J 1V
Ring
Pin
Voltage measuring input
V
T5
Current measuring inputs
xIA
Tx1
xIB
Tx2
xIC
Tx3
xIN
Tx4

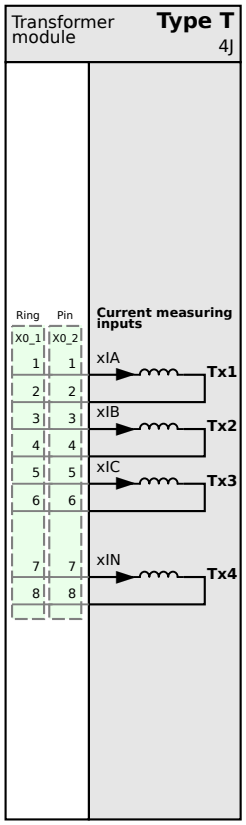
Transformer module
Type T
4J
Ring
Pin
Current measuring inputs
xIA
Tx1
xIB
Tx2
xIC
Tx3
xIN
Tx4

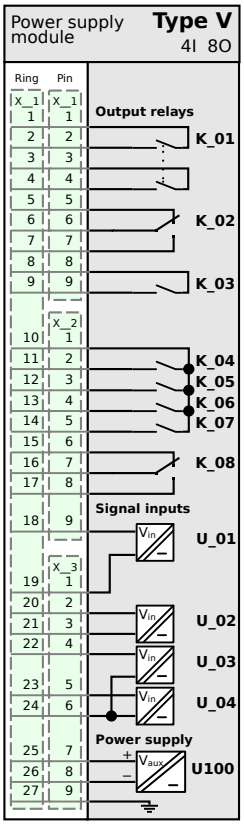
Power supply module
Type V
4I 8O
Ring
Pin
Output relays
K_01
K_02
K_03
K_04
K_05
K_06
K_07
K_08
Signal inputs
U_01
U_02
U_03
U_04
Power supply
U100

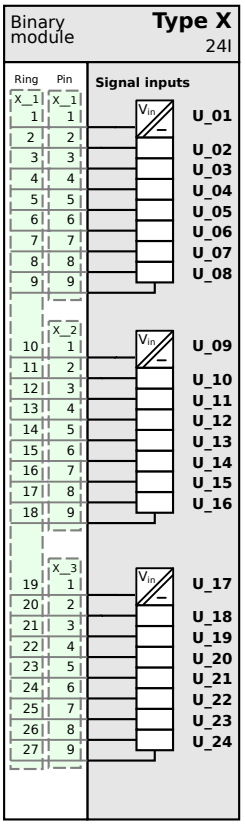
Binary module
Type X
24I
Ring
Pin
Signal inputs
U_01
U_02
U_03
U_04
U_05
U_06
U_07
U_08
U_09
U_10
U_11
U_12
U_13
U_14
U_15
U_16
U_17
U_18
U_19
U_20
U_21
U_22
U_23
U_24

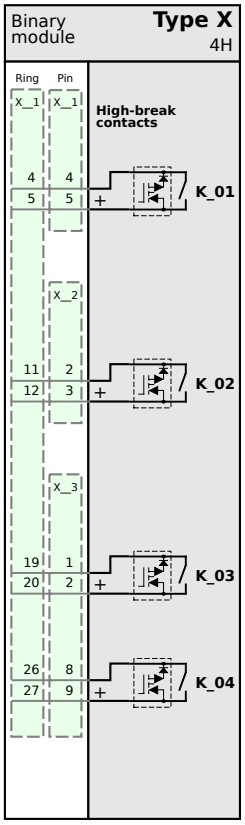
Binary module
Type X
4H
Ring
Pin
High-break contacts
K_01
K_02
K_03
K_04

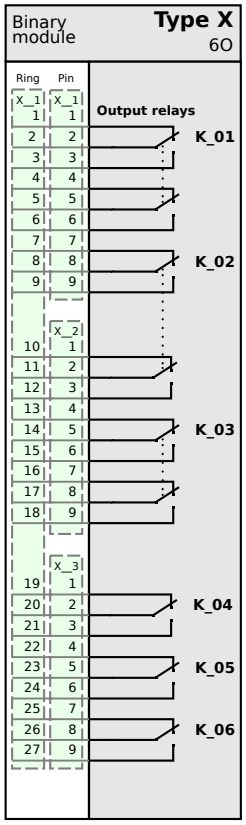
Binary module
Type X
6O
Ring
Pin
Output relays
K_01
K_02
K_03
K_04
K_05
K_06

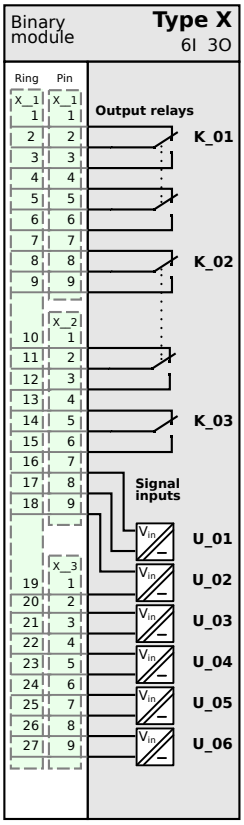
Binary module
Type X
6I 3O
Ring
Pin
Output relays
K_01
K_02
K_03
Signal inputs
U_01
U_02
U_03
U_04
U_05
U_06

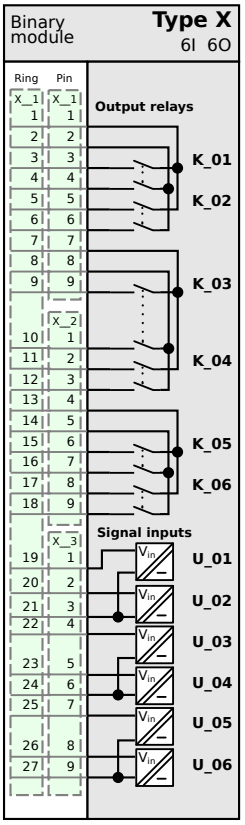
Binary module
Type X
6I 6O
Ring
Pin
Output relays
K_01
K_02
K_03
K_04
K_05
K_06
Signal inputs
U_01
U_02
U_03
U_04
U_05
U_06

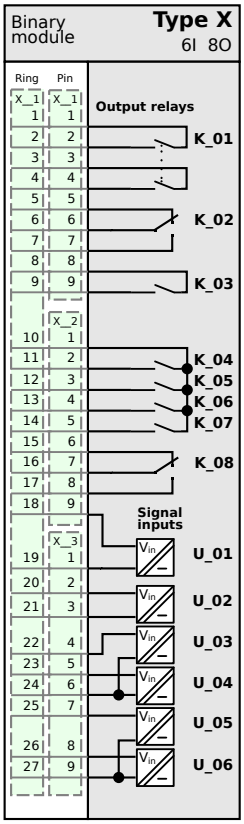
Binary module
Type X
6I 8O
Ring
Pin
Output relays
K_01
K_02
K_03
K_04
K_05
K_06
K_07
K_08
Signal inputs
U_01
U_02
U_03
U_04
U_05
U_06

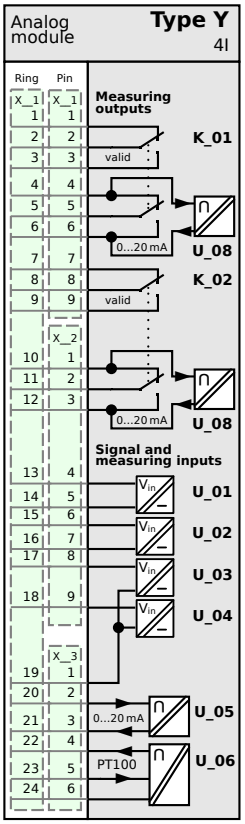
Analog module
Type Y
4I
Ring
Pin
Measuring outputs
K_01
valid
0...20 mA
U_08
K_02
valid
0...20 mA
U_08
Signal and measuring inputs
U_01
U_02
U_03
U_04
0...20 mA
U_05
PT100
U_06

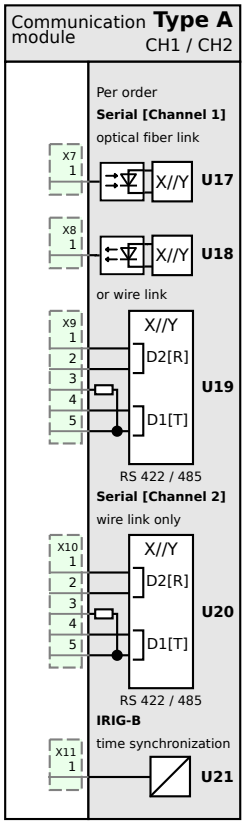
Communication module
Type A
CH1 / CH2
Per order
Serial [Channel 1]
optical fiber link
X/Y
U17
U18
or wire link
D2[R]
D1[T]
U19
RS 422 / 485
Serial [Channel 2]
wire link only
U20
RS 422 / 485
IRIG-B
time synchronization
U21

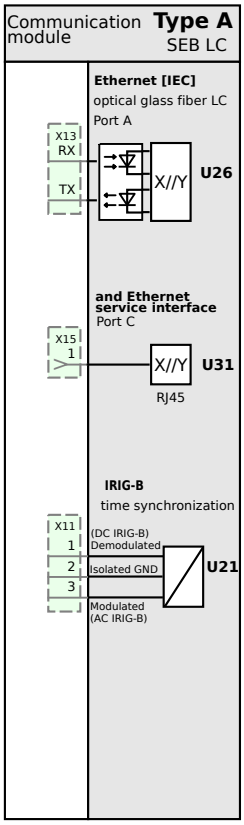
Communication module
Type A
SEB LC
Ethernet [IEC]
optical glass fiber LC
Port A
RX
TX
X/Y
U26
and Ethernet service interface
Port C
U31
RJ45
IRIG-B
time synchronization
(DC IRIG-B) Demodulated
Isolated GND
Modulated (AC IRIG-B)
U21

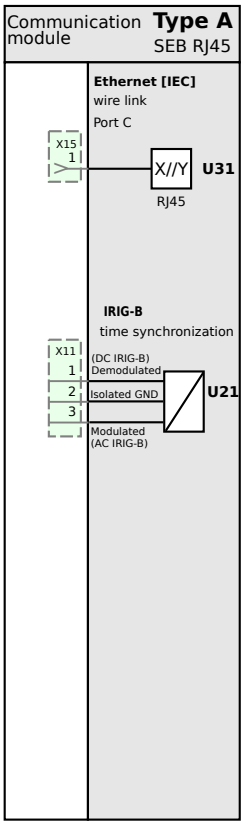
Communication module
Type A
SEB RJ45
Ethernet [IEC]
wire link
Port C
X/Y
U31
RJ45
IRIG-B
time synchronization
(DC IRIG-B) Demodulated
Isolated GND
Modulated (AC IRIG-B)
U21

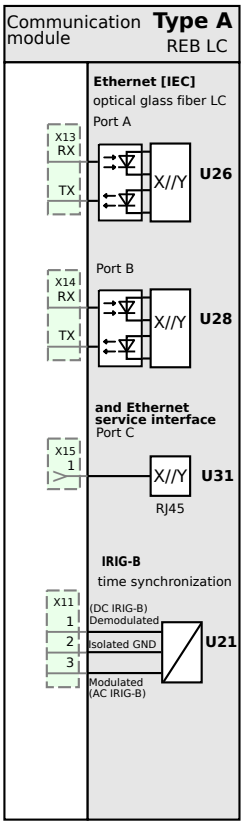
Communication module
Type A
REB LC
Ethernet [IEC]
optical glass fiber LC
Port A
RX
TX
X/Y
U26
Port B
U28
and Ethernet service interface
Port C
U31
RJ45
IRIG-B
time synchronization
(DC IRIG-B) Demodulated
Isolated GND
Modulated (AC IRIG-B)
U21

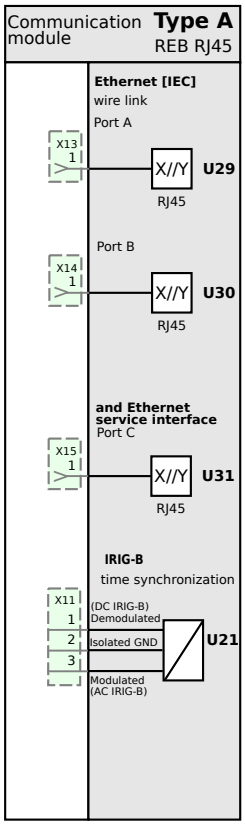
Communication module
Type A
REB RJ45
Ethernet [IEC]
wire link
Port A
X/Y
U29
RJ45
Port B
U30
and Ethernet service interface
Port C
U31
RJ45
IRIG-B
time synchronization
(DC IRIG-B) Demodulated
Isolated GND
Modulated (AC IRIG-B)
U21

6 Local Control (HMI)

6.1 Local Control Panel (HMI)

Switchgear installed in the bay can be controlled from the local control panel (HMI). All the data required for operation of the protection device is entered from the local control panel, and the data important for system management is read out there as well. The following tasks can be handled from the local control panel:

- Controlling switchgear units
- Readout and modification of settings
- Readout of cyclically updated measured operating data and logic status signals
- Readout of operating data logs and of monitoring signal logs
- Readout of event logs after overload situations, ground faults, or short circuits in the power system
- Device resetting and triggering of additional control functions used in testing and commissioning

Control is also possible through the PC interface. This requires a suitable PC and a specific operating program.

6.2 Display and Keypad

6.2.1 Text Display

The local control panel as a text display includes an LC display containing 4 × 20 alphanumeric characters.

There are seven keys with permanently assigned functions situated below the LCD and six additional freely configurable function keys on the right hand side of the LCD.

Furthermore the local control panel (HMI) is provided with 23 LED indicators. 17 of these are on the left hand side of the LCD. The other six LED indicators are situated to the right of the six freely configurable function keys. (See Section 3.12, (p. 3-77) for the configuration of the LED indicators.)

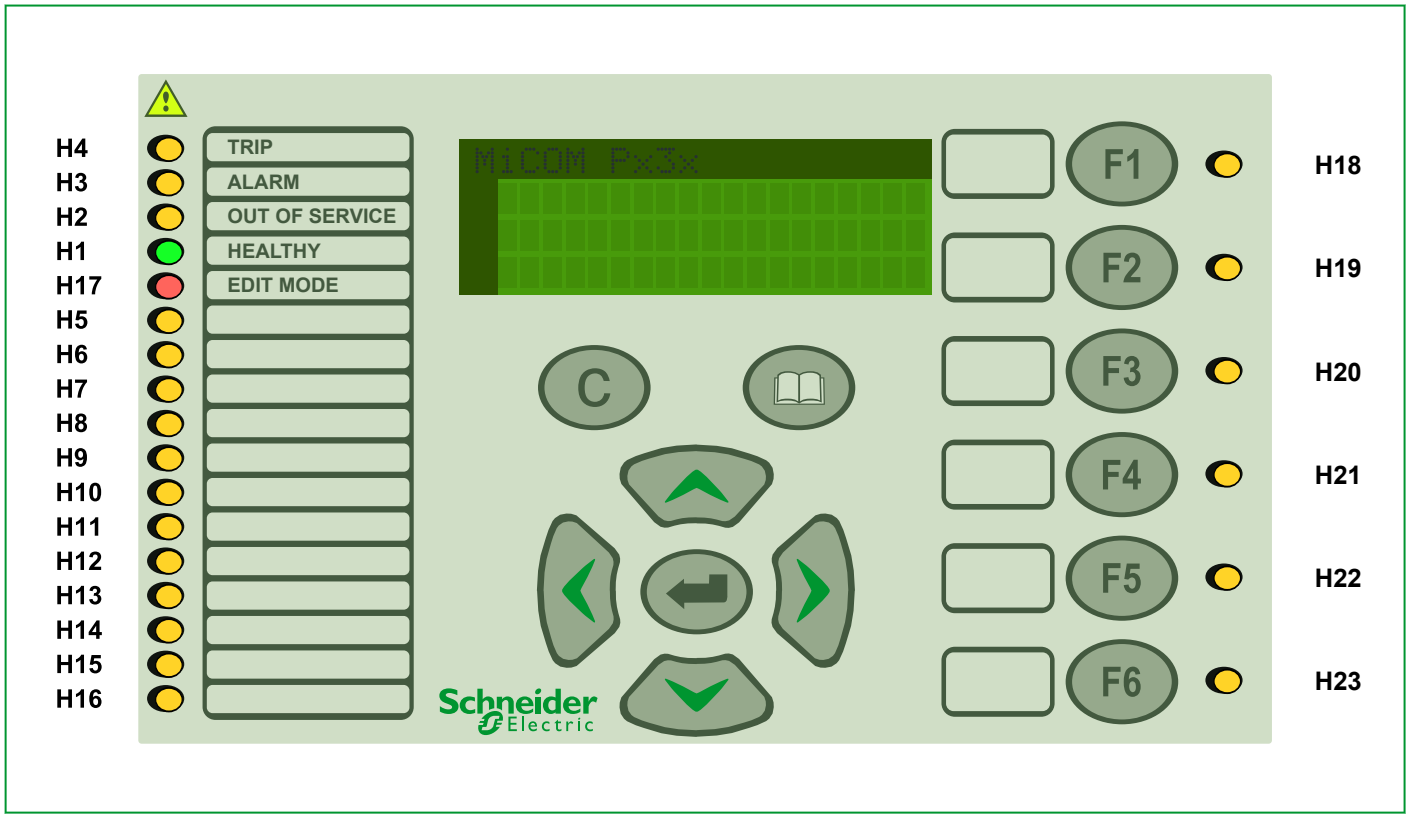

Fig. 6-1: View of the local control panel and layout of the LED indicators for the text display.

6.2.2 Display Illumination

If none of the control keys are pressed, the display illumination will switch off once the set “return time illumination” (setting in menu tree: “Par/Conf/LOC”) has elapsed. Pressing any of the control keys will turn the display illumination on again. In this case the control action that is normally triggered by that key will not be executed. Reactivation of the display illumination is also possible by using a binary input.

If continuous display illumination is required, the function “return time illumination” (LOC: Return time illumin.) is set to *blocked*.

6.2.3 Contrast of the Display

The contrast of the LC display can be adjusted by pressing 3 keys on the local control panel at the same time, as follows:

Keep the Enter key (⏎) and the Clear key (ⓒ) pressed simultaneously, then you can press “Up” or “Down” (⌃, ⌄) to raise or lower the contrast, respectively.

6.2.4 Short Description of Keys

6.2.4.1 “Up” and “Down” Keys

Panel Level: The “up”/“down” keys switch between the pages of the Measured Value Panel.

Menu Tree Level: Press the “up” and “down” keys to navigate up and down through the menu tree in a vertical direction. If the unit is in input mode, the “up” and “down” keys have a different function.

Input mode: Settings can only be changed in the input mode, which is signaled by the LED indicator labeled EDIT MODE. Press the “up” and “down” keys in this mode to change the setting value.

- “Up” key: the next higher value is selected.
- “Down” key: the next lower value is selected.

With list settings, press the “up” and “down” key to change the logic operator of the value element.

6.2.4.2 “Left” and “Right” Keys

Menu Tree Level: Press the “left” and “right” keys to navigate through the menu tree in a horizontal direction. If the unit is in input mode, the “left” and “right” keys have a different function.

Input mode: Settings can only be changed in the input mode, which is signaled by the LED indicator labeled EDIT MODE. When the “left” and “right” keys are pressed, the cursor positioned below one of the digits in the change-enabled value moves one digit to the right or left.

- “Left” key: the cursor moves to the next digit on the left.
- “Right” key: the cursor moves to the next digit on the right.

In the case of a list setting, press the “left” and “right” keys to navigate through the list of items available for selection.

6.2.4.3 ENTER Key

Panel Level: Press the ENTER key at the Panel level to go to the menu tree.

Menu Tree Level: Press the ENTER key to enter the input mode. Press the ENTER key a second time to accept the changes as entered and exit the input mode. The LED indicator labeled EDIT MODE signals that the input mode is active.

6.2.4.4 CLEAR Key

C

Press the CLEAR key to reset the LED indicators and clear all measured event data. The records in the recording memories are not affected by this action.

Input mode: When the CLEAR key is pressed all changes entered are rejected and the input mode is exited.

6.2.4.5 READ Key

Press the READ key to access a selected event recording from either the Panel level or from any other point in the menu tree.

6.2.4.6 Configurable Function Keys

Fx

(F1 … F6)

By pressing a function key the assigned function is triggered.

More details on assigning functions to function keys can be found in Section 3.7, (p. 3-52).

More details on handling function keys can be found in Section 6.9, (p. 6-11).

6.3 Display Levels

All data relevant for operation and all device settings are displayed on two levels. At the Panel level, data such as measurements are displayed in Panels that provide a quick overview of the current state of the bay. The *“menu tree”* level below the panel level allows the user to select all data points (settings, signals, measured variables, etc.) and to change them, if appropriate. To access a selected event recording from either the panel level or from any other point in the menu tree, press the “READ” key: ⓜ

6.4 Availability of the Bay Panel

The Bay Panel is only available under these conditions:

1. On the hardware side the protection unit must be fitted with the binary module X(6I 6O) to a slot supporting this module.
2. By selecting and sending a bay type (with parameter MAIN: Type of bay) a bay type has been generated.

To access a selected event recording from either the panel level or from any other point in the menu tree, press the “READ” key ⓜ.

From the control and display panels (e.g. measured value panels or the bay panel) the user can access the menu tree level by pressing the “ENTER” key.

To return to the previously selected control and display panel from the menu tree level the user must simultaneously press the keys “Cursor up” and “RESET”. (If previously no panel was selected, i.e. after a system restart, then the bay panel, if available, is accessed.)

After the set LOC: Autom. return time has elapsed the protection unit will also return automatically from the menu tree level to the control and display panel last selected.

The user can move from a bay panel to a measured value panel by pressing the key “Cursor left” and back again by pressing the key “Cursor right”.

6.5 Display Panels

The text display of the P633 can display Measured Value Panels which are called up according to system conditions.

Selected measured values are displayed on the Measured Value Panels. The system condition determines which Panel is called up (examples are the Operation Panel and the Fault Panel). Only the Measured Value Panels relevant for the particular design version of the given device and its associated range of functions are actually available.

The Operation Panel is always provided.

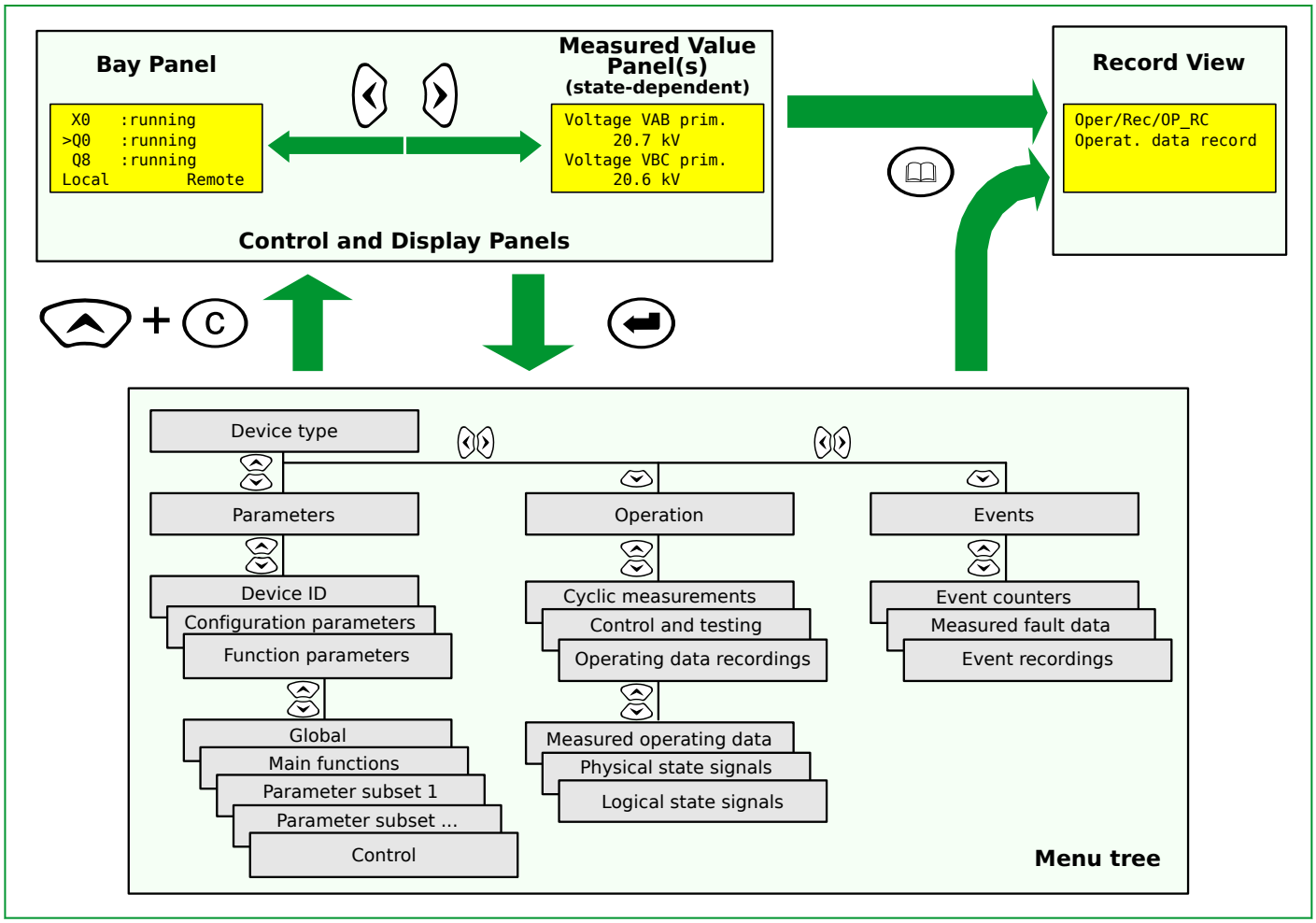

Fig. 6-2: Display panels and menu tree.

6.6 Menu Tree and Data Points

All *data points* (setting values, signals, measured values, etc.) are selected using a *menu tree*. When navigating through the *menu tree*, the first two lines of the LC-Display always show the branch of the *menu tree* that is active, as selected by the user. The *data points* are found at the lowest level of a *menu tree* branch and they are displayed either with their plain text description or in numerically encoded form, as selected by the user. The value associated with the selected *data point*, its meaning, and its unit of measurement are displayed in the line below.

6.7 List Data Points

List data points are a special category. In contrast to other data points, *list data points* generally have more than one associated value element. This category includes tripping matrices, programmable logic functions, and event logs. When a *list data point* is selected, the symbol '↓' is displayed in the bottom line of the LCD, indicating that a sub-level is situated below this displayed level. The individual value elements of a *list data point* are found at this sub-level. In the case of a list *parameter*, the individual value elements are linked by operators such as "OR".

6.8 Note Concerning the Step-by-Step Descriptions

The following presentation of the individual control steps shows which displays can be changed in each case by pressing keys. A small black square to the right of the enter key indicates that the LED indicator labeled Edit Mode is illuminated. The examples used here are not necessarily valid for the device type described in this manual; they merely serve to illustrate the control principles involved.

6.9 Configurable Function Keys

6.9.1 Configuration of the Function Keys F1 to Fx

Function keys [F1] to [Fx] can be assigned a password (see Section 6.13.9, (p. 6-39)). In such a case they are effective only after that password has been entered. By default, no password is required to use the function key.

It is assumed for the following operating example that function key [F1] is enabled only after the password (as assigned at F_KEY: Password funct.key 1) has been entered. After the password has been entered the function key will remain active for the duration set at F_KEY: Return time fct.keys. Thereafter, the function key is disabled until the password is entered again.

	Control Step / Description	Control Action	Display
Step 0	Display example.		Voltage A-B prim. 20.7 kV Voltage B-C prim. 20.6 kV
Step 1	Press function key [F1]. Eight asterisks (*) appear in the fourth line as a prompt to enter the password if it is required. (By default, i.e. no password required, this step and the next do not exist and the function key is effective immediately as described in Step 3.)	F1	********
Step 2a	If a password is set, press the keys corresponding to the set password, for example: “Left” “Down” “Right” “Up” The display will change as shown in the right hand side column. Now press the ENTER key. If the correct password has been entered, the active display will re-appear. Function key [F1] is now effective for the set return time. By default, no password is required and therefore function key [F1] is always effective. Each function key can be assigned its own password, and the return time is running after correct password entry for each individual function key!) If an invalid password has been entered, the display shown above in Step **1** will appear.		* * * * Voltage A-B prim. 20.7 kV Voltage B-C prim. 20.6 kV
Step 2b	This control step can be canceled at any time by pressing the CLEAR key before the ENTER key is pressed.	C	Voltage A-B prim. 20.7 kV Voltage B-C prim. 20.6 kV

	Control Step / Description	Control Action	Display
Step 3	Press [F1] again. The function configured to this function key is carried out.	F1	Voltage A-B prim. 20.7 kV Voltage B-C prim. 20.6 kV
Step 4	When function keys are pressed during their associated return time, then the set function is carried out directly, i.e. without checking for the password again. (By default, i.e. no password required, this step does not exist and the function key is permanently effective.)	Fx	Oper/CtrlTest/LOC Param. change enabl. Yes

6.9.2 Function Keys F1 to Fx as Control Keys

As described in Section 3.7, (p. 3-52) function keys [F1] to [Fx] may be configured as control keys (for [F1] e.g. at F_KEY: Fct. assignm. F1).

In this case different rules apply to checking the password (see Section 6.9.1, (p. 6-11)) and the configuration to “Key/Switch” is ignored.

In case the control functionality is desired then each of the following four control commands, should be assigned to a function key. The particular selection of the four function keys out of the available six, however, does not matter.

- MAIN: Local/Remote key

  The “Local/Remote” control command is effective only in the bay panel except where a binary signal input has been configured for this function. Depending on the configured functionality, the *“Local/Remote”* command toggles either between *“Remote”* and *“Local”* control, or between *“Local/Remote”* and *“Local”* control. (The parameter LOC: Fct. assign. L/R key may be set either to *R* <-> *L* or to *R & L* <-> *L* and will then define which of the two switching modes is active.) If the *“Local/Remote”* command is configured such that it will switch from *“Remote”* control to *“Local”* control, then this can only occur if the password has first been entered at LOC: Password L/R. Switching from *“Local”* to *“Remote”* control will occur without checking the password. (See also Section 3.4.5, (p. 3-12).)

- MAIN: Device selection key

  This selection command is effective only in the bay panel and only if *“Local”* control is activated.

  If local control has been selected, pressing the selection key selects the switchgear unit to be controlled. This selected external device is marked on the text display HMI with the flashing symbol “**>**” in front of the external devices’ designation text.

- MAIN: Device OPEN key

  The OPEN command is effective in the bay panel only. Pressing the key assigned to this function controls the selected switchgear unit – taking into account the interlock equation – to assume the “open” status.

- MAIN: Device CLOSE key

  The CLOSE command is effective in the bay panel only. Pressing the key assigned to this function controls the selected switchgear unit – taking into account the interlock equation – to assume the “closed” status.

6.10 Changing Between Display Levels

Jumping from Menu Tree Level to Panel Level

After start-up of the device, the menu tree level is displayed.

	Control Step / Description	Control Action	Display

Step 0	From the Menu Tree Level, the user can jump to the Panel Level from any position within the menu tree.		`Par/Func/Glob/MAIN`
			`Device on-line`
			`No (=off)`

Step 1	First press the “up” key and hold it down while pressing the CLEAR key.
	Note: It is important to press the “up” key first and release it last in order to avoid unintentional resetting of stored data.
		^
		+
		C
			`Voltage A-B prim.`
			`20.7 kV`
			`Voltage B-C prim.`
			`20.6 kV`

Jumping from Panel Level to Menu Tree Level

	Control Step / Description	Control Action	Display

Step 0	Example of a Measured Value Panel.		`Voltage A-B prim.`
			`20.7 kV`
			`Voltage B-C prim.`
			`20.6 kV`

Step 1	Press the Enter key to go from the Panel Level to the Menu Tree Level.	↵	`P633`

After the set return time has elapsed (setting in menu tree: “Par/Conf/LOC”), the display will automatically switch to the Panel level if a Measured Value Panel has been configured.

6.11 How to use Cyber Security Features

These sections shows the most common tasks associated with Cyber Security features.

For many of these tasks, the steps you take are the same as you have performed previously and with the main changes being in the steps you use to login and/or logout.

6.11.1 Usage

6.11.1.1 How to Login

6.11.1.1.1 Local Default Access

If the Local Default Access is enabled, the user can login via the front panel without password with associated roles.

6.11.1.1.2 Login with Prompt User List

This login process will happen if authorization is required for the current operation.

In this case, the IED will prompt the user list, and the user needs to select proper user name and enter the password to login.

	Login Step / Description	Control Action	Display
Step 0	When operation needs authorization, the CS insufficient rights message is displayed for 2 seconds		`Cyber Security` `insuff. rights`

Step 1	The user list is shown
	Select proper user by pressing the 'up' or 'down'
		Or	`Select a user`
			`DefaultOperator`
			`DefaultEngineer`
			`DefaultViewer`

Step 2	Confirm the selection by 'Enter' key		
Step 3	Password message is shown for user to enter		`User Password?` `********`
Step 4	If password is correct		`Cyber Security` `login successful`
Step 5	If password is incorrect, passord message shows again (as in step 3)		`Cyber Security` `login failed`
Step 6	If decided not to login (by pressing the 'CLEAR' key), the message is displayed for 2 seconds.	C	`User not selected` `Aborted with C key`

6.11.1.2 How to Logout

6.11.1.2.1 How to Logout at the IED

For security consideration, it would be better to logout the IED once the configuration done.

The user can be logged out with 'HMI Logout' in the menu tree: 'Par/Conf/CS'.

6.11.1.2.2 How to Logout at Easergy Studio

- Right-click on the device name and select Log Off.
- In the Log Off confirmation dialog click Yes.

6.11.1.3 How to Disable a Physical Port

It is possible to disable unused physical ports for security reason.

The physical ports can be disabled by using Easergy Studio or the front panel. This can’t be done by the SAT. An Engineer-role is needed to perform this action.

IEC 61850 section:

- Allows to disable the physical interface A/B or A (if available).
- Allows to disable the physical interface C.

The physical ports can be disabled with 'Block Port A/B' or 'Block Port C' in the menu tree: 'Par/Conf/IEC'.

PC section (IEC 103):

- Allows to disable commands and measurements. If both are disabled, the complete interface is disabled.

It can be disabled with 'Command blocking' or 'Sig./meas.val.block' in the menu tree: 'Par/Func/Glob/PC'.

6.11.1.4 How to Secure Function key

In cyber security implementation, this function has been linked to the front panel authorization.

- When the function key pressed, if there is no user login in the front panel or the logged- in user is not authorized, a prompt message will be raised in the front panel to ask the user login.

  Once the user logged-in, function key password is needed if function key has a password. If the user already logged in with authorization and the function key has no password, the command will be executed immediately.
- By default, the OPERATOR or ENGINEER Roles are able to operate the function keys.
- If unauthorized users press Function Key during the setting change, they need to commit the changes first then login with authorized user to operate the function key.

6.12 Control at Panel Level

The measured values that will be displayed on the Measured Value Panels can first be selected in the menu tree under *Par/Conf/LOC*. The user can select different sets of measured values for the Operation Panel (LOC: Fct. Operation Panel), the Overload Panel (LOC: Fct. Overload Panel), and the Fault Panel (LOC: Fct. Fault Panel).

Only the Measured Value Panels relevant for the particular design version of the given device and its associated range of functions are actually available. The selected set of values for the Operation Panel is always available. Please see Section 6.13.5.1, (p. 6-29) for instructions regarding selection. If "MAIN: Without function" has been selected for a given panel, then that panel is disabled.

The Measured Value Panels are called up according to system conditions. If, for example, the device detects an overload or a ground fault, then the corresponding Measured Value Panel will be displayed as long as the overload or ground fault situation exists. Should the device detect a fault, then the Fault Panel is displayed and remains active until the measured fault values are reset, by pressing the CLEAR key, for example.

	Control Step / Description	Control Action	Display
Step 0	Two measured values can be displayed simultaneously on the Panel.		Voltage A-B prim. 20.7 kV Voltage B-C prim. 20.6 kV
Step 1	If more than two measured values have been selected, they can be viewed one page at a time by pressing the "up" or "down" keys. The device will also show the next page of the Measured Value Panel after the set Hold-Time for Panels (LOC: Hold-time for Panels, located at "*Par/Conf*" in the menu tree) has elapsed.	or	Voltage C-A prim. 20.8 kV Current A prim. 415 A

6.12.1 Bay Panel

6.12.1.1 Information Displayed on the Bay Panel

If available the Bay Panel will display switching state signals from external devices (closed, open, intermediate position) and the active control site (local or remote). The text display HMI will show up to 3 external devices, one per line, where the external device selected is marked with the flashing symbol "**>**" in front of the external devices' designation text.

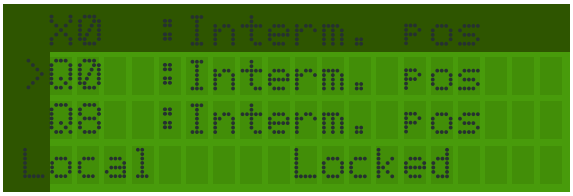

Fig. 6-3: Example of a bay panel.

The sequence for external devices is downwards in columns according to their numbering (DEV01, DEV02, DEV03). To designate these external devices there are up to four characters available, and next to these, separated by a colon, their current state is displayed (“Interm. pos.”, “Open”, “Closed” or “Faulty pos.”).

The active control unit (“Remote” or “Local”) is displayed in the fourth line, as well as its state: “Locked” or “Unlocked”.

6.12.1.2 Controlling Switchgear Units

Switchgear units can be controlled from the local control panel, provided that the unit has been set for “local control”.

The following example assumes that the configurable function keys are set as follows (see also Section 6.9.2, (p. 6-13)):

- [F1]: MAIN: Local/Remote key – called “local/remote” key in the following example
- [F2]: MAIN: Device selection key – called “select” key in the following example
- [F3]: MAIN: Device CLOSE key – called “close” key in the following example
- [F4]: MAIN: Device OPEN key – called “open” key in the following example

If the local/remote key is set to switch between remote and local control (R↔L), then the switch from “remote” to “local” operation requires a password.

The following example is based on the (R↔L) setting for the local/remote key and the factory-set L/R password. If the password has been changed by the user (see Section 6.13.9.3, (p. 6-42)) the following description will apply accordingly.

	Control Step / Description	Control Action	Display
Step 0	Select the Bay Panel.		X0 :Closed Q0 :Closed Q8 :Closed Remote Locked
Step 1	Press the “local/remote” key (L/R) to switch the device to local operation. The Bay Panel is no longer displayed. The device type appears in the first line and eight asterisks (*) appear in the fourth line as a prompt to enter the password.	F1	P633 10:33:22 ********
Step 2a	Press the following keys in sequence: “Left”		P633 10:33:22 *
	“Down”		P633 10:33:22 *
	“Right”		P633 10:33:22 *
	“Up” The display will change as shown in the column on the right.		P633 10:33:22 *
	Now press the Enter key. If the correct password has been entered, the Bay Panel will re-appear. The fourth line will display “Local”. If an invalid password has been entered, the display shown above in **Step 1** will appear.		X0 :Closed Q0 :Closed Q8 :Closed Local Locked
Step 2b	This control step can be canceled at any time by pressing the Clear key before the enter key is pressed.	C	X0 :Closed Q0 :Closed Q8 :Closed Remote Locked
Step 3a	Press the Selection key to select a switchgear unit. Only switchgear units that are electrically controllable can be selected. The external device designation for the selected switchgear unit –“Q0”, for example – is marked by a flashing “**>**” character.	F2	X0 :Closed >Q0 :Closed Q8 :Closed Local Locked
Step 3b	To cancel the selection of a switchgear unit, press the Clear key. Press the Selection key to select a new switchgear unit.	C	X0 :Closed Q0 :Closed Q8 :Closed Local Locked

	Control Step / Description	Control Action	Display
Step 4	After selecting a switchgear unit, press the keys “Open” or “Close” to control the switchgear unit. Before this switching action is executed, compliance with bay interlock conditions – if applicable – is checked.	F4 or F3	
Step 4a	If the check of bay interlock conditions determines that an operation can be carried out, then the switch command is executed. The status “Interm[ediate] pos[ition]” is displayed while the switchgear unit is operating. Once the operating time of the switchgear unit has elapsed, the resulting switching status is displayed.		X0 :Closed Q0 :Interm. pos Q8 :Closed Local Locked X0 :Closed Q0 :Open Q8 :Closed Local Locked
Step 4b	If the check of interlock conditions determines that switching is not allowed, then the selected switchgear unit is no longer marked. If the LED indicators have been configured accordingly, the LED indicator for the signal MAIN: Interlock equ. viol. will be illuminated.		X0 :Closed Q0 :Closed Q8 :Closed Local Locked
Step 5	If no control action takes place within a set time period after selection of a switchgear unit or if the return time for illumination (LOC: Return time illumin.) or the return time for selection (LOC: Return time select.) has elapsed, then the selection is canceled.		
Step 6	Press the local/remote key (L/R) to switch to remote control; this is accomplished without a password prompt.	F1	X0 :Closed Q0 :Open Q8 :Closed Remote Locked

6.13 Control at the Menu Tree Level

6.13.1 Navigation in the Menu Tree

Folders and Function Groups

All data points are organized in different folders based on practical control requirements.

At the root of the menu tree is the unit type; the tree branches into the three main folders “Settings”, “Measurements & Tests” and “Fault & Event Records”, which form the first folder level. Up to two further folder levels follow so that the entire folder structure consists of three main branches and a maximum of three folder levels.

At the end of each branch of folders are the various function groups in which the individual data points (settings) are combined.

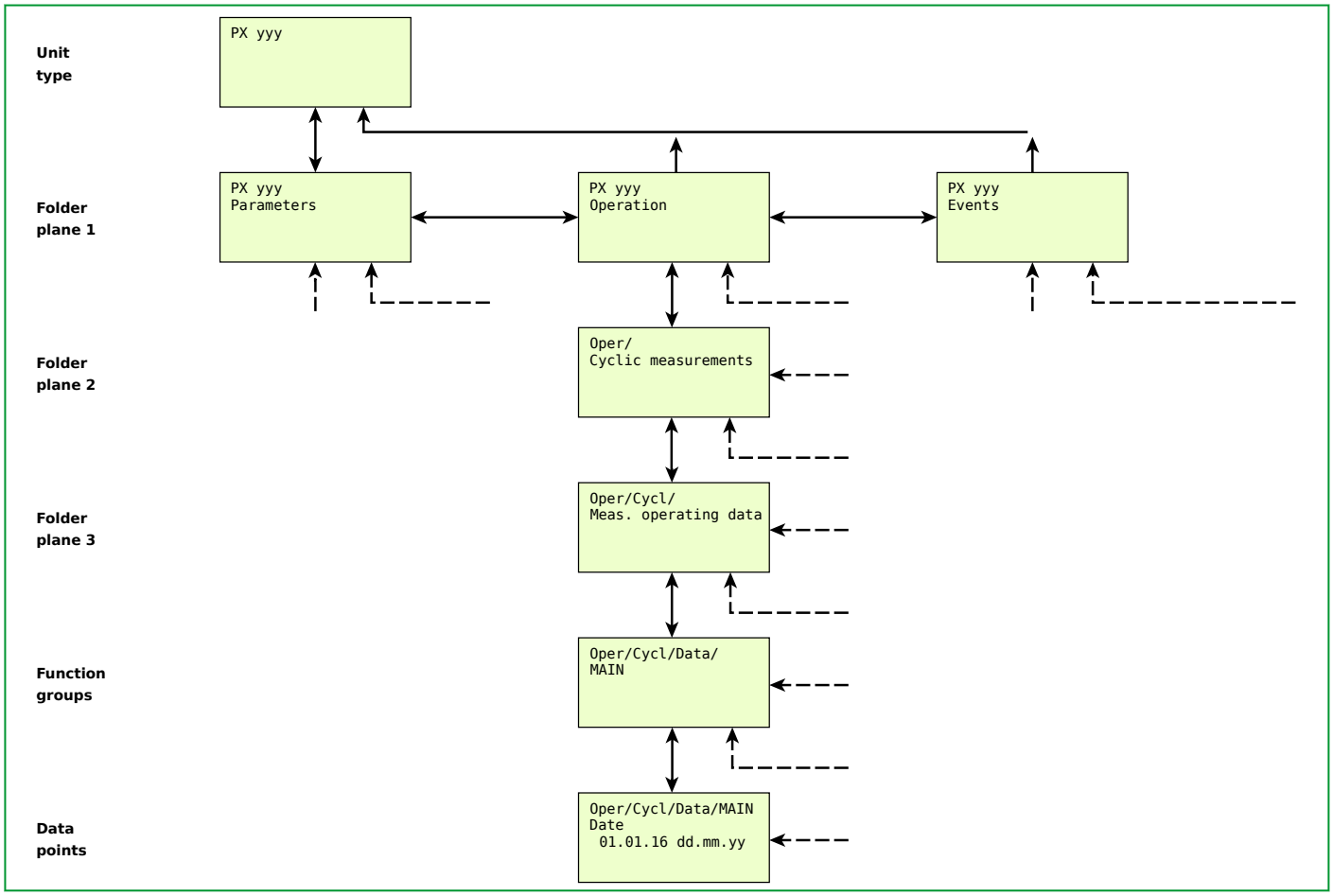

Fig. 6-4: Basic menu tree structure.

6.13.2 Switching Between Address Mode and Plain Text Mode

The display on the local control panel can be switched between address mode and plain text mode. In the address mode the display shows settings, signals, and measured values in numerically coded form, that is, as addresses. In plain text mode the settings, signals, and measured values are displayed in the form of plain text descriptions. In either case, control is guided by the menu tree. The active branch of the menu tree is displayed in plain text in both modes. In the following examples, the display is shown in plain text mode only.

	Control Step / Description	Control Action	Display

Step 0	In this example, the user switches from plain text mode to address mode.		`Par/Func/Glob/MAIN`
			`Device online`
			`No (=off)`

Step 1	To switch from address mode to plain text mode or vice versa, press the CLEAR key and either the “left” key or the “right” key simultaneously. This can be done at any point in the menu tree.	C
		+
		‹
		or
		›
			`Par/Func/Glob/MAIN`
			`003.030`
			`0`

6.13.3 Change-Enabling Function

Although it is possible to select any data point in the menu tree and read the associated value by pressing the keys, it is not possible to switch directly to the input mode. This safeguard prevents unintended changes in the settings.

There are two ways to enter the input mode.

- **Global change-enabling function:** To activate the global change-enabling function, set the LOC: Param. change enabl. parameter to *Yes* (menu tree: Oper/CtrlTest/LOC).

  The change can only be made after the password has been entered. Thereafter, all further changes – with the exception of specially protected control actions (see Section 6.13.8, (p. 6-37)) – are enabled without entering the password.

- **Selective change-enabling function**: Password input prior to any setting change.

  This setup is designed to prevent accidental output and applies even when the global change-enabling function has been activated. The following example is based on the factory-set password. If the password has been changed by the user (see Section 6.13.9, (p. 6-39)), the following description will apply accordingly.

	Control Step / Description	Control Action	Display
Step 0	In the menu tree Oper/CtrlTest/LOC, select the LOC: Param. change enabl. parameter.		Oper/CtrlTest/LOC Param. change enabl. No
Step 1	**Login procedure** Press the ENTER key. Insufficient rights message is displayed for 2 seconds.		Cyber Security insuff. rights
	Select proper user by pressing 'up' and 'down'.	or	Select a user DefaultOperate DefaultEngineer DefaultViewer
	Press the ENTER key. Eight asterisks (*) appear in the display.		User Password? ********
	Enter the configured password of the selected user. Please refer to Section 3.3.2, (p. 3-5) for detailed information about the compatibility with or without Cyber Security.		Cyber Security login successful
Step 2	The LED indicator labeled EDIT MODE will light up. This indicates that the setting can now be changed by pressing the “up” or “down” keys.		Oper/CtrlTest/LOC Param. change enabl. No
Step 3	Change the setting to *Yes*.		Oper/CtrlTest/LOC Param. change enabl. Yes
Step 4	Press the enter key again. The LED indicator will go out. The unit is enabled for further setting changes.		Oper/CtrlTest/LOC Param. change enabl. Yes

The same procedure applies to any setting change unless the global change-enabling function has been activated. This method is recommended for a single setting change only. If several settings are to be changed, then the global change-enabling function is preferable. In the following examples, the global change-enabling function has been activated.

6.13.3.1 Automatic Return

The automatic return function prevents the change-enabling function from remaining activated after a change of settings has been completed. Once the set return time (LOC: Autom. return time, menu tree “Par/Conf/LOC”) has elapsed, the change-enabling function is automatically deactivated, and the display switches to a Measured Value Panel corresponding to the current system condition. The return time is restarted when any of the control keys is pressed.

6.13.3.2 Forced Return

The return described above can be forced from the local control panel by first pressing the “up” key and then holding it down while pressing the CLEAR key.

It is important to press the “up” key first and release it last in order to avoid unintentional deletion of stored data.

Even when the change-enabling function is activated, not all settings can be changed. For some settings it is also necessary to disable the protective function (MAIN: Device on-line, menu tree: Par/Func/Glob/MAIN). Such settings include the configuration settings, by means of which the device interfaces can be adapted to the system. The following entries in the “Change” column of the “Telegram Documentation” (part of the separately available “DataModelExplorer”) indicate whether values can be changed or not:

- **“on”**: The value can be changed even when the protective function is enabled.
- **“off”**: The value can only be changed when the protective function is disabled.
- **“–”**: The value can be read out but cannot be changed.

The device is factory-set so that the protective function is disabled.

6.13.4 Changing Parameters

If all the conditions for a value change are satisfied, the desired setting can be entered.

	Control Step / Description	Control Action	Display

Step 0	Example of a display.
	In this example, the change-enabling function is activated and the protective function is disabled, if necessary.
			`Oper/CtrlTest/LOC`
			`Param. change enabl.`
			`Yes`

Step 1	Select the desired setting by pressing the keys.	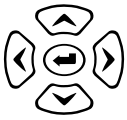	`Par/Conf/LOC`
			`Autom. return time`
			`50000 s`

Step 2	**Login procedure**
	Press the ENTER key. Insufficient rights message is displayed for 2 seconds.
	
	Select proper user by pressing 'up' and 'down'.
	
	Press the ENTER key. Eight asterisks (*) appear in the display.
	
	Enter the configured password of the selected user.
	Please refer to Section 3.3.2, (p. 3-5) for detailed information about the compatibility with or without Cyber Security.
		
			`Cyber Security`
			`insuff. rights`
			
			`Select a user`
			`DefaultOperate`
			`DefaultEngineer`
			`DefaultViewer`
			
			`User Password?`
			`********`
			
			`Cyber Security`
			`login successful`

Step 3	he LED indicator labeled EDIT MODE will light up. The last digit of the value is highlighted by a cursor (underlined).		`Par/Conf/LOC`
			`Autom. return time`
			`50000_ s`

Step 4	Press the “left” or “right” keys to move the cursor to the left or right.		`Par/Conf/LOC`
			`Autom. return time`
			`5000_0 s`

Step 5	Change the value highlighted by the cursor by pressing the “up” and “down” keys. In the meantime the device will continue to operate with the old value.		`Par/Conf/LOC`
			`Autom. return time`
			`5001_0 s`

	Control Step / Description	Control Action	Display
Step 6	Press the ENTER key. The LED indicator labeled EDIT MODE will go out and the device will now operate with the new value. Press the keys to select another setting for a value change.	↵	Par/Conf/LOC Autom. return time 50010 s
Step 7	If you wish to reject the new setting while you are still entering it (LED indicator labeled EDIT MODE is on), press the CLEAR key. The LED indicator will go out and the device will continue to operate with the old value. A further setting can be selected for a value change by pressing the keys.	C	Par/Conf/LOC Autom. return time 50000 s

6.13.5 List Parameters

6.13.5.1 Setting a List Parameter

Using list settings, the user is able to select several elements from a list in order to perform tasks such as defining a trip command or defining the measurements that will be displayed on Measured Value Panels. As a rule, the selected elements are linked by an “OR” operator. Other operators (NOT, OR, AND, NOT OR and NOT AND) are available in the LOGIC function group for linking the selected list items. In this way binary signals and binary input signals can be processed in a Boolean equation tailored to meet user requirements. For the DNP 3.0 communication protocol, the user defines the class of a setting instead of assigning operators. The definition of a trip command shall be used here as an illustration.

	Control Step / Description	Control Action	Display
Step 0	Select a list setting (in this example, the parameter MAIN: Fct.assig.trip cmd.1 at “Par/Func/Glob/MAIN” in the menu tree). The down arrow (↓) indicates that a list setting has been selected.		Par/Func/Glob/MAIN Fct.assign.trip cmd. ↓
Step 1	Press the “down” key. The first function and the first selected signal will appear in the third and fourth lines, respectively. The symbol “#01” in the display indicates the first item of the selection. If MAIN: Without function appears for the first item, then this means that no function assignment has yet been made.		Par/Func/Glob/MAIN Fct.assign.trip cmd. #01 DIST Trip zone 1
Step 2	Scroll through the list of assigned functions by pressing the “right” and “left” keys. Once the end of the list is reached, the display shown on the right will appear.		Par/Func/Glob/MAIN Fct.assign.trip cmd. OR #02 DIST Trip zone 2 Par/Func/Glob/MAIN Fct.assign.trip cmd. #05 MAIN ?????
Step 3	Press the ENTER key at any position in the list. The LED indicator labeled EDIT MODE will light up.		Par/Func/Glob/MAIN Fct.assign.trip cmd. #02 DIST Trip zone 2
Step 4	Scroll through the assignable functions by pressing the “right” and “left” keys in the input mode.		Par/Func/Glob/MAIN Fct.assign.trip cmd. #02 DIST Trip zone 4
Step 5	Select the operator or the class using the “up” and “down“ keys. In this particular case, only the “OR” operator can be selected. There is no limitation on the selection of classes.		Par/Func/Glob/MAIN Fct.assign.trip cmd. OR #02 DIST Trip zone 4
Step 6	Press the ENTER key. The LED indicator will go out. The assignment has been made. The unit will now operate with the new settings. If no operator has been selected, the “OR” operator is **always** assigned automatically when the ENTER key is pressed. There is no automatic assignment of classes.		Par/Func/Glob/MAIN Fct.assign.trip cmd. OR #02 DIST Trip zone 4
Step 7	Press the “up” key to exit the list at any point in the list.		Par/Func/Glob/MAIN Fct.assign.trip cmd. ↓
Step 8	If you wish to reject the new setting while you are still entering it (LED indicator labeled EDIT MODE is on), press the CLEAR key. The LED indicator labeled EDIT MODE will be extinguished.		Par/Func/Glob/MAIN Fct.assign.trip cmd. OR #02 DIST Trip zone 2

6.13.5.2 Deleting a List Parameter

If MAIN: Without function is assigned to a given item, then all the following items are deleted. If this occurs for item #01, everything is deleted.

6.13.6 Memory Readout

Memories can be read out after going to the corresponding entry point. This does not necessitate activating the change-enabling function or even disabling the protective functions. Inadvertent clearing of a memory at the entry point is not possible.

The following memories are available:

- In the menu tree “Oper/Rec/OP_RC”: Operating data memory
- In the menu tree “Oper/Rec/MT_RC”: Monitoring signal memory
- Event memories
  - In the menu tree “Events/Rec/FT_RC”: Fault memories 1 to 8
  - In the menu tree “Events/Rec/OL_RC”: Overload memories 1 to 8

Not all of these event memories are present in each unit.

6.13.6.1 Readout of the Operating Data Memory

The operating data memory contains stored signals of actions that occur during operation, such as the enabling or disabling of a device function. A maximum of 100 entries is possible, after which the oldest entry is overwritten.

	Control Step / Description	Control Action	Display
Step 0	Select the entry point for the operating data memory.		Oper/Rec/OP_RC Operat. data record. ↓
Step 1	Press the “down” key to enter the operating data memory. The latest entry is displayed.		Oper/Rec/OP_RC 01.01.13 11:33 ARC Enabled USER No
Step 2	Press the “left” key repeatedly to display the entries one after the other in chronological order. Once the end of the operating data memory has been reached, pressing the “left” key again will have no effect.		Oper/Rec/OP_RC 01.01.13 11:33 PSIG Enabled USER Yes
Step 3	Press the “right” key to display the previous entry.		Oper/Rec/OP_RC 01.01.13 11:33 ARC Enabled USER No
Step 4	Press the “up” key at any point within the operating data memory to return to the entry point.		Oper/Rec/OP_RC Operat. data record. ↓

6.13.6.2 Readout of the Monitoring Signal Memory

If the unit detects an internal fault in the course of internal self-monitoring routines or if it detects power system conditions that prevent flawless functioning of the unit, then an entry is made in the monitoring signal memory. A maximum of 30 entries is possible. After that an “overflow” signal is issued.

	Control Step / Description	Control Action	Display
Step 0	Select the entry point for the monitoring signal memory.		Oper/Rec/MT_RC Mon. signal record. ↓
Step 1	Press the “down” key to enter the monitoring signal memory. The oldest entry is displayed.		Mon. signal record. 01.01.13 13:33 SFMON Checksum error param
Step 2	Press the “right” key repeatedly to display the entries one after the other in chronological order. If more than 30 monitoring signals have been entered since the last reset, the “overflow” signal is displayed as the last entry.		Mon. signal record. 01.01.13 10:01 SFMON Exception oper. syst.
Step 3	Press the “left” key to display the previous entry.		Mon. signal record. 01.01.13 13:33 SFMON Checksum error param
Step 4	If the “down” key is held down while a monitoring signal is being displayed, the following additional information will be displayed: ● **First** Time when the signal first occurred ● **Updated** The fault is still being detected (Yes) or is no longer detected (No) by the self-monitoring function. ● **Acknowledged** The fault was no longer detected by the self-monitoring function and has been reset (Yes). ● **Number** The signal occurred x times.		Mon. signal record. 01.01.13 13:33 SFMON Checksum error param
			First: 13:33:59.744 Updated: Yes Acknowledged: No Number: 5
Step 5	Press the “up” key at any point within the monitoring signal memory to return to the entry point.		Oper/Rec/MT_RC Mon. signal record. ↓

6.13.6.3 Readout of the Event Memories (Records)

There are eight event memories for each type of event. The latest event is stored in event memory 1, the previous one in event memory 2, and so forth.

Readout of event memories is illustrated using the fault memory as an example.

	Control Step / Description	Control Action	Display
Step 0	Select the entry point for the first fault memory, for example. If the memory contains entries, the third line of the display will show the date and time the fault began. If the third line is blank, then there are no entries in the fault memory.		Events/Rec/FT_RC Fault recording 1 01.01.13 10:00:33 ↓
Step 1	Press the “down” key to enter the fault memory. First, the fault number is shown. In this example it is the 22nd fault since the last reset.		Fault recording 1 FT_RC Event 22
Step 2	Press the “right” key repeatedly to see first the measured fault data and then the binary signals in chronological order. The time shown in the second line is the time, measured from the onset of the fault, at which the value was measured or the binary signal started or ended. Once the end of the fault has been reached (after the “right” key has been pressed repeatedly), pressing the “right” key again will have no effect.		Fault recording 1 200 ms FT_DA Running time 0.17 s
			Fault recording 1 0 ms FT_RC Record. in progress Start
			Fault recording 1 241 ms FT_RC Record. in progress End
Step 3	Press the “left” key to see the previous measured value or the previous signal.		Fault recording 1 0 ms FT_RC Record. in progress Start
Step 4	Press the “up” key at any point within the fault memory to return to the entry point.		Events/Rec/FT_RC Fault recording 1 01.01.13 10:00:33 ↓

6.13.7 Resetting

All information memories – including the event memories and the monitoring signal memory – as well as the LED indicators can be reset manually. In addition, the LED indicators are automatically cleared and initialized at the onset of a new fault – provided that the appropriate operating mode has been selected – so that they always indicate the latest fault.

The LED indicators can also be reset manually by pressing the CLEAR key, which is always possible in the standard control mode. This action also triggers an LED indicator test and an LCD display test. The event memories are not affected by this action, so that inadvertent deletion of the records associated with the reset signal pattern is reliably prevented.

Because of the ring structure of the event memories, the data for eight consecutive events are updated automatically so that manual resetting should not be necessary, in principle.

Deleting the event memories completely (e.g. after a function test), can be accomplished by various resetting actions including the configuration of a group resetting for several memories. An overview of all resetting actions can be found in section “Resetting Actions” in Chapter “Operation”.

Resetting a single memory from the local control panel is described in the following with the example of a fault memory. In this example the global change-enabling function has already been activated.

	Control Step / Description	Control Action	Display

Step 0	Select the reset setting. Line 3 of the display shows the number of faults since the last reset, 10 in this example.		`Oper/CtrlTest/FT_RC`
			`Reset recording`
			`10`

Step 1	**Login procedure**
	Press the ENTER key. Insufficient rights message is displayed for 2 seconds.
	
	Select proper user by pressing 'up' and 'down'.
	
	Press the ENTER key. Eight asterisks (*) appear in the display.
	
	Enter the configured password of the selected user.
	Please refer to Section 3.3.2, (p. 3-5) for detailed information about the compatibility with or without Cyber Security.
		
			`Cyber Security`
			`insuff. rights`
			
			`Select a user`
			`DefaultOperate`
			`DefaultEngineer`
			`DefaultViewer`
			
			`User Password?`
			`********`
			
			`Cyber Security`
			`login successful`

Step 2	The LED indicator labeled EDIT MODE will light up.		`Oper/CtrlTest/FT_RC`
			`Reset recording`
			`10`
			`Don't execute`

Step 3	Press the “Up” or “Down” keys to change the setting to *Execute*.		`Oper/CtrlTest/FT_RC`
			`Reset recording`
			`10`
			`Execute`

Step 4	Press the ENTER key. The LED indicator labeled EDIT MODE will be extinguished. The value in line 3 is reset to *0*.		`Oper/CtrlTest/FT_RC`
			`Reset recording`
			`0`

Step 5	To cancel the intended clearing of the fault recordings after leaving the standard control mode (the LED indicator labeled EDIT MODE is on), press the CLEAR key. The LED indicator will be extinguished, and the fault recordings remain stored unchanged in the protection unit’s memory. Any setting can be selected again for a value change by pressing the keys.		`Oper/CtrlTest/FT_RC`
			`Reset recording`
			`10`

6.13.8 Password-Protected Control Actions

Certain actions from the local control panel such as a manual trip command for testing purposes can only be carried out by entering a password so as to prevent unwanted output even though the global change-enabling function has been activated (see Section 6.13.3, (p. 6-23)).

This setup is designed to prevent accidental output and applies even when the global change-enabling function has been activated. The password consists of a pre-defined sequential key combination entered within a specific time interval. If the password has been changed by the user (see Section 6.13.9, (p. 6-39)), the following description will apply accordingly.

	Control Step / Description	Control Action	Display
Step 0	In the menu tree “Oper/CtrlTest/MAIN”, select the parameter MAIN: Man. trip cmd. USER.		Oper/CtrlTest/MAIN Man. trip cmd. USER Don't execute
Step 1	**Login procedure** Press the ENTER key. Insufficient rights message is displayed for 2 seconds. Select proper user by pressing 'up' and 'down'. Press the ENTER key. Eight asterisks (*) appear in the display. Enter the configured password of the selected user. Please refer to Section 3.3.2, (p. 3-5) for detailed information about the compatibility with or without Cyber Security.	↵ ▲ or ▼ ↵	Cyber Security insuff. rights Select a user DefaultOperate DefaultEngineer DefaultViewer User Password? ******** Cyber Security login successful
Step 2	The LED indicator labeled EDIT MODE will light up. This indicates that the setting can now be changed by pressing the “up” or “down” keys.		Oper/CtrlTest/MAIN Man. trip cmd. USER Don't execute
Step 3	Change the setting to *execute*.	▲ ▼	Oper/CtrlTest/MAIN Man. M-trip cmd USER Execute
Step 4	Press the enter key again. The LED indicator labeled EDIT MODE will go out. The unit will execute the command.	↵	Oper/CtrlTest/MAIN Man. trip cmd. USER Don't execute
Step 5	As long as the LED indicator labeled EDIT MODE is on, the control action can be terminated by pressing the CLEAR key. The LED indicator labeled EDIT MODE will be extinguished.	C	Oper/CtrlTest/MAIN Man. trip cmd. USER Don't execute

6.13.9 Changing the Password

6.13.9.1 Local Control Panel with Password Protection

The password consists of a combination of keys that must be entered sequentially within a specific time interval. The “left”, “right”, “up” and “down” keys may be used to define the password and represent the numbers 1, 2, 3 and 4, respectively:

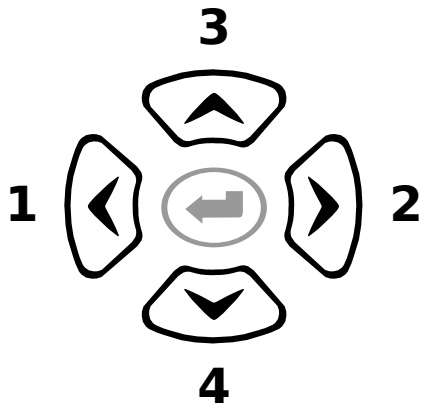

	Control Step / Description	Control Action	Display
Step 0	In the menu tree “Par/Conf/LOC”, select the LOC: Password setting.		Par/Conf/LOC Password ********
Step 1	**Login procedure** Press the ENTER key. Insufficient rights message is displayed for 2 seconds.		Cyber Security insuff. rights
	Select proper user by pressing 'up' and 'down'.	or	Select a user DefaultOperate DefaultEngineer DefaultViewer
	Press the ENTER key. Eight asterisks (*) appear in the display.		User Password? ********
	Enter the configured password of the selected user. Please refer to Section 3.3.2, (p. 3-5) for detailed information about the compatibility with or without Cyber Security.		Cyber Security login successful
Step 2	The LED indicator labeled EDIT MODE will light up. The third line shows an underscore character (_) as the prompt for entering a new password.		Par/Conf/LOC Password _
Step 3	Enter the new password, which in this example is done by pressing the “up” key followed by the “down” key.		Par/Conf/LOC Password *
			Par/Conf/LOC Password **
Step 4	Press the enter key again. Asterisks appear in the third line, and a cursor (underscore) in the fourth line prompts the user to enter the new password again.		Par/Conf/LOC Password ** _
Step 5	Re-enter the password.		Par/Conf/LOC Password ** *
			Par/Conf/LOC Password ** **
Step 6a	Press the ENTER key again. If the password has been re-entered correctly, the LED indicator labeled EDIT MODE goes out and the display appears as shown on the right. The new Password is now valid.		Par/Conf/LOC Password ********

	Control Step / Description	Control Action	Display
Step 6b	If the password has been re-entered incorrectly, the LED indicator labeled EDIT MODE remains on and the display shown on the right appears. The password has to be re-entered. It is also possible to cancel the change of the Password by pressing the CLEAR key (see Step 8).		Par/Conf/LOC Password ** _
Step 7	The change in password can be canceled at any time before Step 6 by pressing the CLEAR key. If this is done, the original Password continues to be valid.	C	Par/Conf/LOC Password ********

6.13.9.2 Local Control Panel without Password Protection

Operation from the local control panel without password protection is also possible. To select this option, immediately press the ENTER key a second time in steps 4 and 6 of Table, (p. 6-40), without entering anything else. This will configure the local control panel without password protection, and no control actions involving changes will be possible until the global change-enabling function has been activated (see “Change-Enabling Function”, Section 6.13.3, (p. 6-23)).

6.13.9.3 Changing and Displaying the L/R Password

In order to enable local control on devices fitted with the graphic display HMI (ordering option) the L/R password has to be entered.

	Control Step / Description	Control Action	Display
Step 0	In the menu tree “Par/Conf/LOC”, select the LOC: Password L/R setting.		Par/Conf/LOC Password L/R ********
Step 1	**Login procedure** Press the ENTER key. Insufficient rights message is displayed for 2 seconds.		Cyber Security insuff. rights
	Select proper user by pressing 'up' and 'down'.	or	Select a user DefaultOperate DefaultEngineer DefaultViewer
	Press the ENTER key. Eight asterisks (*) appear in the display.		User Password? ********
	Enter the configured password of the selected user. Please refer to Section 3.3.2, (p. 3-5) for detailed information about the compatibility with or without Cyber Security.		Cyber Security login successful
Step 2	The red LED indicator labeled EDIT MODE will be illuminated. The current Password L/R will appear in the third line.		Par/Conf/LOC Password L/R 1423
Step 3	Enter the new password, which in this example is done by pressing the “up” key followed by the “down” key.		Par/Conf/LOC Password L/R *
			Par/Conf/LOC Password L/R **
Step 4	Press the enter key again. Asterisks appear in the third line, and a cursor (underscore) in the fourth line prompts the user to enter the new Password L/R again.		Par/Conf/LOC Password L/R ** _
Step 5	Re-enter the new Password L/R.		Par/Conf/LOC Password L/R ** *
			Par/Conf/LOC Password L/R ** **

	Control Step / Description	Control Action	Display
Step 6a	Press the ENTER key again. If the new Password L/R has been re-entered correctly, the red LED indicator labeled EDIT MODE will be extinguished and the display appears as shown on the right. The new Password L/R is now valid.		Par/Conf/LOC Password L/R ********
Step 6b	If the new Password L/R has been re-entered incorrectly, the red LED indicator labeled EDIT MODE remains illuminated and the display shown on the right hand side appears. The new Password L/R needs to be re-entered. It is also possible to cancel the change of the Password L/R by pressing the CLEAR key (see Step 8).		Par/Conf/LOC Password L/R ** _
Step 7	The change of the Password L/R can be canceled at any time before Step 7 by pressing the CLEAR key. If this is done, the original Password L/R continues to be valid.		Par/Conf/LOC Password L/R ********

7 Settings

7.1 Parameters

The P633 must be adjusted to the system and to the protected equipment by appropriate settings. This chapter gives instructions for determining the settings, which are located in the folder titled “Parameters” in the menu tree. The sequence in which the settings are listed and described in this chapter corresponds to their sequence in the menu tree.

The P633 devices are supplied with a factory-set standard configuration of settings that, in most cases, correspond to the default settings or become apparent after a “cold restart”. The P633 is blocked in that case. All settings must be re-entered after a cold restart.

Note

Detailed information about all parameters, including complete selection tables and IEC 60870-5-103 protocol properties, are separately available as a set of interlinked PDF files for user-friendly navigation, packed in one ZIP archive named DataModelExplorer_P633_en_P01.zip.

*In contrast to P633 versions before P633-630, the implementation of the IEC 61850 protocol now features parameters that can**not** be modified from the local control panel (HMI) or with the operating program. Instead, these parameters are set with a special IEC 61850 operating software, named “IED Configurator”.*

Therefore these settings are not listed in this chapter or the following chapter. These parameters are described in Chapter “IEC 61850 Settings via IED Configurator”.

Cancelling a Protection or Control Function

The user can adapt the device to the requirements of a particular high-voltage system by including the relevant protection or control functions in the device configuration and cancelling all others (removing them from the device configuration).

The following conditions must be met before cancelling a protection or control function:

- The protection or control function in question must be disabled.
- None of the functions of the protection or control function to be cancelled may be assigned to a binary input.
- None of the signals of the protection or control function may be assigned to a binary output or an LED indicator.
- No functions of the device function being cancelled can be selected in a list setting.
- None of the signals of the protection or control function may be linked to other signals by way of an “m out of n” parameter.

The protection or control function to which a parameter, a signal, or a measured value belongs is defined by the function group designation (example: “LIMIT:”).

General Notes on the Configuration of Function Group “Binary Input” (INP)

The P633 has optical coupler inputs for processing binary signals from the system. The number and connection schemes for the available binary inputs are shown in the terminal connection diagrams. The “*DataModelExplorer*” (available

as a separate ZIP archive file) gives information about the configuration options for all binary inputs.

The P633 identifies the installed modules during startup. If a given binary I/O module is not installed or has fewer binary signal inputs than the maximum number possible at this slot, then the configuration addresses for the missing binary signal inputs are automatically hidden in the menu tree.

When configuring binary inputs, one should keep in mind that the same function can be assigned to several signal inputs. Thus one function can be activated from several control points having different signal voltages.

The configuration in slots A and B and the configuration for the binary inputs U C01 to U C08 will be changed with the selection of a new bay type. (Whether automatic configuration occurs, is defined in the setting `MAIN: Auto-assignment I/O`.) Depending on the connection type chosen for the P633 – pin-type or ring-type cable socket terminals – the symbolic slots A, B and C refer to the following slots:

Symbolic slot	Pin-type cable socket terminals	Ring-type cable socket terminals
A	06	12
B	07	14
C	08	16

The configuration of binary inputs for each bay type – in the case of auto-assignment – is given in the List of Bay Types in the Appendix.

In the case of auto-assignment, the following notes apply:

Before selecting a new bay type, make sure that the binary inputs at slots A and B as well as the binary inputs U C01 to U C08 are configured for functions from the DEVxx function groups only. Otherwise there will be an error message, and the new bay type will not be activated.

Before selecting a new bay type, make sure that all binary inputs specified in the List of Bay types for the selected bay type are actually available in the device. Otherwise there will be an error message, and the new bay type will not be activated.

In order to ensure that the device will recognize the input signals, the triggering signals must persist for at least 30 ms. The operating mode for each binary signal input can be defined.

The user can specify whether the presence (*active 'high'* mode) or absence (*active 'low'* mode) of a voltage shall be interpreted as the logic "1" signal.

General Notes on the Configuration of Function Group "Binary Output" (OUTP)

The P633 has output relays for the output of binary signals. The number and connection schemes for the available binary output relays are shown in the terminal connection diagrams. The "*DataModelExplorer*" (available as a separate ZIP archive file) gives information about the configuration options for all binary outputs.

The P633 identifies the installed modules during startup. If a given binary I/O module is not installed or has fewer output relays than the maximum number possible at this slot, then the configuration addresses for the missing output relays are automatically hidden in the menu tree.

The contact data for the all-or-nothing relays permits them to be used either as command relays or as signal relays. It is important to note that the contact rating of the binary I/O modules (X) varies (see Chapter “Technical Data”). One signal can also be assigned simultaneously to several output relays for the purpose of contact multiplication.

Selecting a new bay type can change the configuration for slots A and B. (Whether automatic configuration occurs, is defined in the setting MAIN: Auto-assignment I/O.) Depending on the connection type chosen for the P633 – pin-type or ring-type cable socket terminals – the symbolic slots A and B correspond to the following slots:

Symbolic slot	Pin-type cable socket terminals	Ring-type cable socket terminals
A	06	12
B	07	14

The configuration of output relays for each bay type – in the case of auto-assignment – is given in the List of Bay Types in the Appendix.

In the case of auto-assignment, the following notes apply:

Before selecting a new bay type, make sure that the output relays at slots A and B are configured for functions from the DEVxx function groups only. Otherwise there will be an error message, and the new bay type will not be activated.

Before selecting a new bay type, make sure that all output relays specified in the List of Bay types for the selected bay type are actually available in the device. Otherwise there will be an error message, and the new bay type will not be activated.

An operating mode can be defined for each output relay. Depending on the selected operating mode, the output relay will operate in either an energize-on-signal (ES) mode or a normally-energized (NE) mode and in either a latching or non-latching mode. For output relays operating in latching mode, the operating mode setting also determines when latching will be cancelled.

General Notes on the Configuration of the LED Indicators

The P633 has LED indicators for parallel display of binary signals. LED indicator H 1 is not configurable. It is labeled “HEALTHY” and signals the operational readiness of the protection unit (supply voltage present). LED indicators H 2 and H 3 are not configurable either. H 2 is labeled “OUT OF SERVICE” and signals a blocking or malfunction; H 3 is labeled “ALARM” and signals a warning alarm. LED indicator H 17 indicates that the user is in the “EDIT MODE”. Section “Configuration and Operating Mode of the LED Indicators (Function Group LED)” in Chapter “Operation” describes the layout of the LED indicators and the factory setting for LED indicator H 4.

An operating mode can be defined for each LED indicator. Depending on the set operating mode, the LED indicator will operate in either energize-on-signal (ES) mode (“open-circuit principle”) or normally-energized (NE) mode (“closed-circuit principle”) and in either latching or non-latching mode. For LED indicators operating in latching mode, the operating mode setting also determines when latching will be cancelled.

With the multi-color LED indicators the colors red and green can be independently assigned with functions. The third color amber results as a

mixture of red and green, i.e. when both functions assigned to the LED indicator are simultaneously present.

7.1.1 Device Identification

The device identification settings are used to record the ordering information and the design version of the P633. They have no effect on the device functions. These settings should only be changed if the design version of the P633 is modified.

Device

Parameter							Address
Default	**Min**	**Max**	**Unit**			**Logic Diagram**	
DVICE: Device type							000 000
633	631	762					
The device type is displayed. This display cannot be altered.							
DVICE: Software version 1XX							024 219
Not measured	0	65535					
The setting defines the software version of the device. This display cannot be altered.							
DVICE: SW date							002 122
1997-01-01	1997-01-01	2098-11-08	dd.mm.yy				
Date the software was created. This display cannot be altered. **Note:** The centuries are not displayed. The supported dates range from January 1st, 1997, until November 7th, 2098.							
DVICE: SW version communic.							002 103
Not measured	0.00	655.35					
Software version for the device's communication software. This display cannot be altered.							
DVICE: DM IEC 61850 version							002 059
Not measured	0	65535					
Software version of the communication software based on the device's protocol per IEC 61850. This display cannot be altered.							
DVICE: Language version							002 123
800.0	0.0	899.9					
Identification of the change level of the texts of the data model. This display cannot be altered.							
DVICE: Text vers.data model							002 121
1	0	255					
Using the ‘text replacement tool' provided by the operating program, the user can change the parameter descriptors (plain text designations) and load them into the device. These customized data models contain an identifier defined by the user while preparing the data model. This identifier is displayed at this point in the menu tree. Standard data models have the identifier ‘0' (factory-set default).							
DVICE: F number							002 124
0	0	9999					
The F number is the serial number of the device. The display cannot be altered.							
DVICE: AFS Order No.							001 000
0:							

Parameter							Address
Default	Min	Max	Unit			Logic Diagram	
DVICE: PCS Order No.							001 200
0:							
Order numbers for the device. The user cannot alter this number.							
DVICE: Order ext. No. 1							000 003
0	0	999					
DVICE: Order ext. No. 2							000 004
0	0	999					
DVICE: Order ext. No. 3							000 005
0	0	999					
DVICE: Order ext. No. 4							000 006
0	0	999					
DVICE: Order ext. No. 5							000 007
0	0	999					
DVICE: Order ext. No. 6							000 008
0	0	999					
DVICE: Order ext. No. 7							000 009
0	0	999					
DVICE: Order ext. No. 8							000 010
0	0	999					
DVICE: Order ext. No. 9							000 011
0	0	999					
DVICE: Order ext. No. 10							000 012
0	0	999					
DVICE: Order ext. No. 11							000 013
0	0	999					
DVICE: Order ext. No. 12							000 014
0	0	999					
DVICE: Order ext. No. 13							000 015
0	0	999					
DVICE: Order ext. No. 14							000 016
0	0	999					
DVICE: Order ext. No. 15							000 017
0	0	999					
DVICE: Order ext. No. 16							000 018
0	0	999					
DVICE: Order ext. No. 17							000 019
0	0	999					

Parameter							Address
Default	Min	Max	Unit			Logic Diagram	
DVICE: Order ext. No. 18							000 020
0	0	999					
DVICE: Order ext. No. 19							000 021
0	0	999					
DVICE: Order ext. No. 20							000 022
0	0	999					
DVICE: Order ext. No. 21							000 023
0	0	999					
DVICE: Order ext. No. 22							000 024
0	0	999					
DVICE: Order ext. No. 23							000 025
0	0	999					
DVICE: Order ext. No. 24							000 026
0	0	999					
DVICE: Order ext. No. 25							000 027
0	0	999					
DVICE: Order ext. No. 26							000 028
0	0	999					
DVICE: Order ext. No. 27							000 029
0	0	999					
Order extension numbers for the device.							
DVICE: Module var. slot 1							086 050
65535: Not fitted							
DVICE: Module var. slot 2							086 051
65535: Not fitted							
DVICE: Module var. slot 3							086 052
65535: Not fitted							
DVICE: Module var. slot 4							086 053
65535: Not fitted							
DVICE: Module var. slot 5							086 054
65535: Not fitted							
DVICE: Module var. slot 6							086 055
65535: Not fitted							
DVICE: Module var. slot 7							086 056
65535: Not fitted							
DVICE: Module var. slot 8							086 057
65535: Not fitted							

Parameter						Address
Default	Min	Max	Unit			Logic Diagram
DVICE: Module var. slot 9						086 058
65535: Not fitted						
DVICE: Module var. slot 10						086 059
65535: Not fitted						
DVICE: Module var. slot 11						086 060
65535: Not fitted						
DVICE: Module var. slot 12						086 061
65535: Not fitted						
DVICE: Module var. slot 13						086 062
65535: Not fitted						
DVICE: Module var. slot 14						086 063
65535: Not fitted						
DVICE: Module var. slot 15						086 064
65535: Not fitted						
DVICE: Module var. slot 16						086 065
65535: Not fitted						
DVICE: Module var. slot 17						086 066
65535: Not fitted						
DVICE: Module var. slot 18						086 067
65535: Not fitted						
DVICE: Module var. slot 19						086 068
65535: Not fitted						
DVICE: Module var. slot 20						086 069
65535: Not fitted						
DVICE: Module var. slot 21						086 070
65535: Not fitted						
Item number of the module inserted in the respective slot 1 to 21. The display always shows the actual component configuration at any given time.						
DVICE: Module vers. slot 1						086 193
27: Not fitted						
DVICE: Module vers. slot 2						086 194
27: Not fitted						
DVICE: Module vers. slot 3						086 195
27: Not fitted						
DVICE: Module vers. slot 4						086 196
27: Not fitted						
DVICE: Module vers. slot 5						086 197
27: Not fitted						

Parameter						Address
Default	Min	Max	Unit		Logic Diagram	
DVICE: Module vers. slot 6						086 198
27: Not fitted						
DVICE: Module vers. slot 7						086 199
27: Not fitted						
DVICE: Module vers. slot 8						086 200
27: Not fitted						
DVICE: Module vers. slot 9						086 201
27: Not fitted						
DVICE: Module vers. slot 10						086 202
27: Not fitted						
DVICE: Module vers. slot 11						086 203
27: Not fitted						
DVICE: Module vers. slot 12						086 204
27: Not fitted						
DVICE: Module vers. slot 13						086 205
27: Not fitted						
DVICE: Module vers. slot 14						086 206
27: Not fitted						
DVICE: Module vers. slot 15						086 207
27: Not fitted						
DVICE: Module vers. slot 16						086 208
27: Not fitted						
DVICE: Module vers. slot 17						086 209
27: Not fitted						
DVICE: Module vers. slot 18						086 210
27: Not fitted						
DVICE: Module vers. slot 19						086 211
27: Not fitted						
DVICE: Module vers. slot 20						086 212
27: Not fitted						
DVICE: Module vers. slot 21						086 213
27: Not fitted						
Index letter specifying the version of the module fitted in the respective slot.						
DVICE: Variant of module A						086 047
65535: Not fitted						
Item number of module A in this design version.						

Parameter						Address
Default	Min	Max	Unit			Logic Diagram
DVICE: Version of module A						086 190
27: Not fitted						
Index letter specifying the version of module A.						
DVICE: MAC address module A						104 061
2:						
MAC address for the network hardware of the Ethernet module. This address is introduced during manufacture and can only be read.						
DVICE: Variant of module L						086 048
65535: Not fitted						
Item number of module L in this design version.						
DVICE: Version of module L						086 191
27: Not fitted						
Index letter specifying the version of module L.						
DVICE: Variant of module B						086 049
65535: Not fitted						
Item number of module B in this design version.						
DVICE: Version of module B						086 192
27: Not fitted						
Index letter specifying the version of the digital bus module B.						
DVICE: Variant module B (a)						086 046
65535: Not fitted						
Item number of the analog bus module B in this design version.						
DVICE: Version module B (a)						086 189
27: Not fitted						
Index letter specifying the version of the digital bus module B.						
DVICE: IP address						111 000
2:						
DVICE: Subnet mask						111 001
2:						
DVICE: MAC address						111 003
2:						
Display of the IP address (or subnet mask, MAC address, respectively) of the Ethernet interface of the processor module. This can be useful for network analysis, especially if these settings have been retrieved via DHCP.						
DVICE: Customer ID data 1						000 040
0.00	0.00	99.99				

Parameter							Address
Default	Min	Max	Unit			Logic Diagram	
DVICE: Customer ID data 2							000 041
0.00	0.00	99.99					
DVICE: Customer ID data 3							000 042
0.00	0.00	99.99					
DVICE: Customer ID data 4							000 043
0.00	0.00	99.99					
DVICE: Customer ID data 5							000 044
0.00	0.00	99.99					
DVICE: Customer ID data 6							000 045
0.00	0.00	99.99					
DVICE: Customer ID data 7							000 046
0.00	0.00	99.99					
DVICE: Customer ID data 8							000 047
0.00	0.00	99.99					
Set your numerically coded user data here for your records.							
DVICE: Location							001 201
0:							
Reference input for the device's location as selected by user.							
DVICE: Device ID							000 035
0	0	9999					
ID code for use by the PC programs for operating and setting. Further instructions on this setting are given in the description of the respective operating program.							
DVICE: Substation ID							000 036
0	0	9999					
ID code for use by the PC programs for operating and setting. Further instructions on this setting are given in the description of the respective operating program.							
DVICE: Feeder ID							000 037
0	0	9999					
ID code for use by the PC programs for operating and setting. Further instructions on this setting are given in the description of the respective operating program.							
DVICE: Device password 1							000 048
0	0	9999					

Parameter							Address
Default	**Min**	**Max**	**Unit**				**Logic Diagram**
DVICE: Device password 2							000 049
0	0	9999					
ID code used by the operating program for identification purposes. See description of the respective operating program for more detailed setting instructions.							
DVICE: SW version DHMI							002 131
Not measured	0.00	655.35					
DVICE: SW version DHMI DM							002 132
1.10	0.00	655.35					
DVICE: SW vers.Chin.DHMI DM							008 233
2.00	0.00	655.35					
DVICE: SW version OS							002 101
Not measured	0.00	655.35					
DVICE: SW version OS DM							002 111
1.01	0.00	655.35					
DVICE: SW version FPGA							010 169
Not measured	0.00	655.35					
Internal software version numbers.							

Local control panel

Parameter							Address
Default	**Min**	**Max**	**Unit**				**Logic Diagram**
LOC: Local HMI exists							221 099
1: Yes							
When set to *Yes* it is apparent that the device is fitted with the local control panel (HMI).							

7.1.2 Configuration Parameters

Cyber Security

Parameter							Address
Default	Min	Max	Unit			Logic Diagram	
CS: CyberSecurity Vers.							180 031
2	0	65535					
Version of Cyber Security implementation within the device. Easergy MiCOM 30 is starting with value 2 to be compatible with other Schneider Electric devices.							
CS: Number of users							180 002
0	0	9999					
Actual number of users in RBAC configuration.							
CS: Comms logout							180 032
0: don't execute							
If executed, the current logged in user at PC port or via Tunneling interface is logged out (can be only executed by Comms).							
CS: HMI logout							180 033
0: don't execute							
If executed, the current logged in user at HMI interface is logged out (can be only executed by HMI).							
CS: Comms username							180 043
0:							
Display of the name of the user which is logged in either at PC-port or via Tunneling.							
CS: HMI username							180 034
0:							
Display of the name of the user which is logged in at HMI.							
CS: User access role							180 013
0:							
Role(s) of user which is actually logged in. It will be set by the device after successful login and will be cleared when user is logged off. Of the first 5 roles of a user, the first 3 chars of the roles names will be displayed separated with one blank between each.							
CS: Max login attempts							180 011
0	0	9999					
Number of possible login attempts or blocked (blocked means no limitation of attempts).							
CS: Login attempts left							180 010
0	0	9999					
Remaining login attempts.							

Parameter							Address
Default	**Min**	**Max**	**Unit**				**Logic Diagram**
CS: Blocking time							180 015
0	0	1800	s				
Time how long login shall be blocked after erroneous login attempts or blocked (blocked means it will not getting active).							
CS: Block time left							180 012
0	0	1800	s				
Remaining blocking login time after erroneous login attempts.							
CS: Result EPW setting							180 041
0	-5	0					
Display of a value to informe on the result of the password setting. (EPW = Encrypted Password)							
CS: Change pincode							180 003
0	0	0					
Change the PIN code using the navigation keys of the HMI. It is not necessary at communication interface.							
CS: Config disabled							180 044
1: Yes							
Configure disabled or not.							
CS: Recovery Password							180 014
0:							
Display of the Token and allow entry for reset to factory password.							
CS: Reset RBAC							180 045
12	1	12					
Only on HMI. Starting reset timer and display code.							

Local control panel

Parameter							Address
Default	**Min**	**Max**	**Unit**			**Logic Diagram**	
LOC: Language							003 020
2: Reference language							
Language in which texts will be displayed on the user interface (HMI).							
LOC: Decimal delimiter							003 021
1: Dot							
Character to be used as decimal delimiter on the local control panel.							
LOC: Password							003 035
1234	0	4444					
The password to be used for changing settings from the local control panel can be defined here.							
LOC: Password L/R							221 040
1423	0	4444					
The password used to change the setting from “Remote” to “Local” control can be defined here. (Switching from “Local” to “Remote” control occurs without checking the password.)							
LOC: Display L/R							221 070
1: With				Fig. 3-4, (p. 3-8)			
This setting defines whether the control site – “Local” or “Remote” – shall be displayed on the bay panel.							
LOC: Displ. interl. stat.							221 071
1: With				Fig. 3-4, (p. 3-8)			
This setting defines whether the “Locked” or “Unlocked” status shall be displayed on the bay panel.							
LOC: Fct. reset key							005 251
060 000: MAIN: Without function				Fig. 3-79, (p. 3-114)			
Selection of counters and memories that are reset by pressing the RESET key on the local control panel. (Resetting LED indicators and measured event values is permanently assigned internally, so that they are always reset when the RESET key is pressed.)							
LOC: Fct. read key							080 110
060 000: MAIN: Without function							
Selection of up to 16 functions to be triggered when pressing the read key. Event counters and event recordings are offered for selection. If several functions have been selected then they will be sequentially triggered by repeated pressing of the read key.							

Parameter					Address
Default	**Min**	**Max**	**Unit**		**Logic Diagram**
LOC: Fct. assign. L/R key					225 208
1: R <-> L				Fig. 3-8, (p. 3-12)	
This setting defines whether the (electric) key-operated switch switches between remote / local control (L↔R) or between remote+local control / local control (R&L↔L).					
LOC: Fct. menu jmp list 1					030 238
060 000: MAIN: Without function					
LOC: Fct. menu jmp list 2					030 239
060 000: MAIN: Without function					
Selection of specified functions which will be sequentially displayed by repeated reading of the menu jump list 1 (or 2).					
LOC: Fct. Operation Panel					053 007
060 000: MAIN: Without function				Fig. 3-5, (p. 3-9)	
Definition of the values to be displayed on the Measured Value Panel also referred to as the Operation Panel.					
LOC: Fct. Overload Panel					053 005
060 000: MAIN: Without function				Fig. 3-7, (p. 3-11)	
Definition of the values to be displayed on the Overload Panel.					
LOC: Fct. Fault Panel					053 003
060 000: MAIN: Without function				Fig. 3-6, (p. 3-10)	
Definition of the values to be displayed on the Fault Panel.					
LOC: Hold-time for Panels					031 075
5	1	10	s	Fig. 3-5, (p. 3-9)	
Setting for the time period during which a panel is displayed, before switching to the next panel. This setting is only relevant if more values are selected than can be shown on the LC-Display.					
LOC: Autom. return time					003 014
60	60	60000	s	Fig. 3-5, (p. 3-9)	
If the user does not press a key on the local control panel during this set time period, the change-enabling function is deactivated.					
LOC: Return time select.					221 030
60	60	60000	s	Fig. 3-4, (p. 3-8)	
If the user does not press a key on the local control panel during this set time period, then the selection of a switchgear unit is cancelled.					

Parameter							Address
Default	**Min**	**Max**	**Unit**				**Logic Diagram**
LOC: Return time illumin.							003 023
60	60	60000	s	Fig. 3-4, (p. 3-8)			
If the user does not press a key on the local control panel during this set time period, then the backlighting of the LCD display is switched off, and any switchgear selection that might have been made is cancelled.							

PC link

Parameter							Address
Default	**Min**	**Max**	**Unit**				**Logic Diagram**
PC: Bay address							003 068
1	0	254		Fig. 3-9, (p. 3-14)			
PC: Device address							003 069
1	0	255		Fig. 3-9, (p. 3-14)			
Bay and device addresses are used to address the device in communication via the PC interface. An identical setting must be selected for both addresses.							
PC: Baud rate							003 081
115.2: 115.2 kBaud			Baud	Fig. 3-9, (p. 3-14)			
Baud rate of the PC interface.							
PC: Parity bit							003 181
1: Even				Fig. 3-9, (p. 3-14)			
Set the same parity that is set at the interface of the PC connected to the P633.							
PC: Spontan. sig. enable							003 187
0: None				Fig. 3-9, (p. 3-14)			
Enable for the transmission of spontaneous signals via the PC interface.							
PC: Select. spontan.sig.							003 189
060 000: MAIN: Without function				Fig. 3-9, (p. 3-14)			
Selection of spontaneous signals for transmission via the PC interface.							
PC: Transm.enab.cycl.dat							003 084
0: Without				Fig. 3-9, (p. 3-14)			
Enable for the cyclic transmission of measured values via the PC interface.							
PC: Cycl. data ILS tel.							003 185
060 000: MAIN: Without function				Fig. 3-9, (p. 3-14)			
Selection of the measured values that are transmitted in a user-defined telegram via the PC interface.							
PC: Delta V							003 055
3.0	0.0	15.0	%Vnom	Fig. 3-9, (p. 3-14)			
A measured voltage value is transmitted via the PC interface if it differs by the set delta quantity from the last measured value transmitted.							
PC: Delta I							003 056
3.0	0.0	15.0	%Inom	Fig. 3-9, (p. 3-14)			
A measured current value is transmitted via the PC interface if it differs by the set delta quantity from the last measured value transmitted.							
PC: IP address							111 004
192	0	255					

Parameter							Address
Default	**Min**	**Max**	**Unit**			**Logic Diagram**	
PC: IP address 1							111 005
168	0	255					
PC: IP address 2							111 006
1	0	255					
PC: IP address 3							111 007
2	0	255					

IP address of the Ethernet interface of the P633's processor module.

This is the Ethernet interface of the processor module and can be used for special service activities, e.g. for uploading new firmware.

Note: In the operating program, the complete IP address is displayed at **PC: IP address**. The device’s front panel display only displays the IP address distributed to these four data model addresses:

- **PC: IP address**,
- **PC: IP address 1**,
- **PC: IP address 2**,
- **PC: IP address 3**.

Note: This interface can only be used if it has been configured (**PC: IP address**, **PC: Subnet mask**, **PC: IP address mode**) and activated via **PC: IP Enable config.**.

PC: Subnet mask							111 008
255	0	255					
PC: Subnet mask 1							111 009
255	0	255					
PC: Subnet mask 2							111 010
255	0	255					
PC: Subnet mask 3							111 011
0	0	255					

Subnet mask of the Ethernet interface of the processor module.

Note: In the operating program, the complete mask is displayed at **PC: Subnet mask**. The device’s front panel display only displays the mask distributed to these four data model addresses:

- **PC: Subnet mask**,
- **PC: Subnet mask 1**,
- **PC: Subnet mask 2**,
- **PC: Subnet mask 3**.

Parameter							Address
Default	**Min**	**Max**	**Unit**				**Logic Diagram**
PC: IP address mode							111 016
1: DHCP							
Setting of the method how the IP address of the Ethernet interface of the processor module shall be defined. ● *DHCP*: The IP address shall be retrieved from a DHCP server. ● *Fix*: The setting of **PC: IP address** shall be used. ● *Device address*: The setting of **PC: IP address** shall be used for the first three number values of the IP address, the fourth number value of the IP address shall be the value of **PC: Device address**.							
PC: IP Enable config.							111 017
0: don't execute							
Activating the Ethernet interface of the processor module.							
PC: Delta f							003 057
2.0	0.0	2.0	%fnom	Fig. 3-9, (p. 3-14)			
The measured frequency value is transmitted via the PC interface if it differs by the set delta from the last measured value transmitted.							
PC: Delta meas.v.ILS tel							003 155
3.0	0.0	15.0		Fig. 3-9, (p. 3-14)			
The telegram is transmitted if a measured value differs by the set delta quantity from the last measured value transmitted.							
PC: Delta t							003 058
1	0	15	min	Fig. 3-9, (p. 3-14)			
All measured values are transmitted again via the PC interface after this time period has elapsed – provided that transmission has not been triggered by the other delta conditions.							
PC: Time-out							003 188
1	1	60	min	Fig. 3-9, (p. 3-14)			
Setting for the time to elapse after the last telegram exchange via the PC interface before activating the second communication channel of communication module A.							

“Logical” communication interface 1

Parameter						Address
Default	Min	Max	Unit		Logic Diagram	
COMM1: Function group COMM1						056 026
0: Without						
Cancelling function group COMM1 or including it in the configuration. If the function group is cancelled from the configuration, then all associated settings and signals are hidden, with the exception of this setting.						
COMM1: General enable USER						003 170
0: No				Fig. 3-11, (p. 3-17) Fig. 3-12, (p. 3-18) Fig. 3-13, (p. 3-19)		
Disabling or enabling communication interface 1.						
COMM1: Basic IEC870-5 enabl						003 215
0: No				Fig. 3-10, (p. 3-16)		
Common settings for enabling all protocols based on IEC 870-5-xxx.						
COMM1: Addit. -101 enable						003 216
0: No				Fig. 3-10, (p. 3-16)		
Enabling additional settings that are relevant for the protocol based on IEC 870-5-101.						
COMM1: Addit. ILS enable						003 217
0: No				Fig. 3-10, (p. 3-16)		
Enabling additional settings that are relevant for the ILS protocol.						
COMM1: MODBUS enable						003 220
0: No				Fig. 3-10, (p. 3-16)		
Enabling settings relevant for the MODBUS protocol.						
COMM1: DNP3 enable						003 231
0: No				Fig. 3-10, (p. 3-16)		
Enabling settings relevant for the DNP 3.0 protocol.						
COMM1: COURIER enable						103 040
0: No				Fig. 3-10, (p. 3-16)		
Enabling settings relevant for the COURIER protocol.						
COMM1: Communicat. protocol						003 167
060 000: MAIN: Without function				Fig. 3-10, (p. 3-16)		
Select the communication protocol that shall be used for the communication interface.						

Parameter							Address
Default	**Min**	**Max**	**Unit**			**Logic Diagram**	
COMM1: -103 prot. variant							003 178
1: Private				Fig. 3-11, (p. 3-17)			
The user may select between two variants of the 103 protocol. **Note:** This setting is hidden unless the IEC 870-5-xxx protocol is enabled.							
COMM1: MODBUS prot. variant							003 214
1: Compatible				Fig. 3-14, (p. 3-20)			
The user may select between two variants of the MODBUS protocol. **Note:** This setting is hidden unless the MODBUS protocol is enabled.							
COMM1: Line idle state							003 165
1: Light on / high				Fig. 3-11, (p. 3-17) Fig. 3-12, (p. 3-18) Fig. 3-13, (p. 3-19) Fig. 3-14, (p. 3-20) Fig. 3-15, (p. 3-21) Fig. 3-16, (p. 3-22)			
Setting for the line idle state indication.							
COMM1: Baud rate							003 071
19.2: 19.2 kBaud			Baud	Fig. 3-11, (p. 3-17) Fig. 3-12, (p. 3-18) Fig. 3-13, (p. 3-19) Fig. 3-14, (p. 3-20) Fig. 3-15, (p. 3-21) Fig. 3-16, (p. 3-22)			
Baud rate of the communication interface.							
COMM1: Parity bit							003 171
2: Even				Fig. 3-11, (p. 3-17) Fig. 3-12, (p. 3-18) Fig. 3-13, (p. 3-19) Fig. 3-14, (p. 3-20) Fig. 3-15, (p. 3-21) Fig. 3-16, (p. 3-22)			
Set the same parity that is set at the interface of the control system connected to the P633.							

Parameter					Address
Default	**Min**	**Max**	**Unit**		**Logic Diagram**
COMM1: Dead time monitoring					003 176
1: Yes				Fig. 3-11, (p. 3-17) Fig. 3-12, (p. 3-18) Fig. 3-13, (p. 3-19) Fig. 3-14, (p. 3-20) Fig. 3-15, (p. 3-21) Fig. 3-16, (p. 3-22)	
The P633 monitors telegram transmission to make sure that no excessive pause occurs within a telegram. This monitoring function can be disabled if it is not required. **Note:** This setting is only necessary for modem transmission.					
COMM1: Mon. time polling					003 202
25	3	254	s	Fig. 3-11, (p. 3-17) Fig. 3-12, (p. 3-18) Fig. 3-13, (p. 3-19) Fig. 3-14, (p. 3-20) Fig. 3-15, (p. 3-21) Fig. 3-16, (p. 3-22)	
The time between two polling calls from the communication master must be less than the time set here.					
COMM1: Octet comm. address					003 072
1	0	254		Fig. 3-11, (p. 3-17) Fig. 3-12, (p. 3-18) Fig. 3-13, (p. 3-19) Fig. 3-14, (p. 3-20) Fig. 3-15, (p. 3-21) Fig. 3-16, (p. 3-22)	
The communication address and the ASDU address are used to identify the device in communication via the interface. An identical setting must be selected for both addresses. “ASDU”: Application Service Data Unit					
COMM1: Oct.2 comm.addr.DNP3					003 240
0	0	255		Fig. 3-15, (p. 3-21)	
In the DNP 3.0 protocol, a 16-bit address is used to identify devices. The address that can be set here is the higher-order octet, whereas the address set at **COMM1: Octet comm. address** is the lower-order octet of the DNP address. **Note:** This setting is hidden unless the DNP 3.0 protocol is enabled.					

Parameter					Address
Default	**Min**	**Max**	**Unit**		**Logic Diagram**
COMM1: Pos. acknowledgement					103 060
1: Single character E5					

The following transmission frame formats are available (according to the standard):

- *Short message FT 1.2*: short message with a fixed block length of 5 characters
- *Single character E5*: single control character

COMM1: Test monitor on					003 166
0: No				Fig. 3-11, (p. 3-17) Fig. 3-12, (p. 3-18) Fig. 3-13, (p. 3-19) Fig. 3-14, (p. 3-20) Fig. 3-15, (p. 3-21) Fig. 3-16, (p. 3-22)	

Setting specifying whether data shall be recorded for service activities.

COMM1: Name of manufacturer					003 161
1: SE				Fig. 3-11, (p. 3-17) Fig. 3-12, (p. 3-18) Fig. 3-13, (p. 3-19)	

Setting for the name of the manufacturer.

Note:

- This setting can be changed to ensure compatibility.
- This setting is hidden unless an IEC 870-5 protocol is enabled.

COMM1: Octet address ASDU					003 073
1	0	255		Fig. 3-11, (p. 3-17) Fig. 3-12, (p. 3-18) Fig. 3-13, (p. 3-19)	

The communication address and the ASDU address are used to identify the device in communication via the interface. An identical setting must be selected for both addresses.

Note: This setting is hidden unless an IEC 870-5 protocol is enabled.

“ASDU”: Application Service Data Unit

COMM1: Spontan. sig. enable					003 177
65535: All				Fig. 3-11, (p. 3-17) Fig. 3-12, (p. 3-18) Fig. 3-13, (p. 3-19)	

Enable for the transmission of spontaneous signals via the communication interface.

Note: This setting is hidden unless an IEC 870-5 protocol is enabled.

Parameter					Address
Default	**Min**	**Max**	**Unit**		**Logic Diagram**
COMM1: Select. spontan.sig.					003 179
060 000: MAIN: Without function				Fig. 3-11, (p. 3-17) Fig. 3-12, (p. 3-18) Fig. 3-13, (p. 3-19)	
Selection of spontaneous signals for transmission via “logical” communication interface 1.					
COMM1: Transm.enab.cycl.dat					003 074
0: Without				Fig. 3-11, (p. 3-17) Fig. 3-12, (p. 3-18) Fig. 3-13, (p. 3-19)	
Enabling of cyclic transmission of measured values via the communication interface. **Note:** This setting is hidden unless an IEC 870-5 protocol is enabled.					
COMM1: Cycl. data ILS tel.					003 175
060 000: MAIN: Without function				Fig. 3-11, (p. 3-17) Fig. 3-12, (p. 3-18) Fig. 3-13, (p. 3-19)	
Selection of the measured values that are transmitted in a user-defined telegram via the communication interface. **Note:** This setting is hidden unless an IEC 870-5 protocol is enabled.					
COMM1: Delta V					003 050
3.0	0.0	15.0	%Vnom	Fig. 3-11, (p. 3-17) Fig. 3-12, (p. 3-18) Fig. 3-13, (p. 3-19)	
A measured voltage value is transmitted via the communication interface if it differs by the set delta quantity from the last measured value transmitted. **Note:** This setting is hidden unless an IEC 870-5 protocol is enabled.					
COMM1: Delta I					003 051
3.0	0.0	15.0	%Inom	Fig. 3-11, (p. 3-17) Fig. 3-12, (p. 3-18) Fig. 3-13, (p. 3-19)	
A measured current value is transmitted via the communication interface if it differs by the set delta quantity from the last measured value transmitted. **Note:** This setting is hidden unless an IEC 870-5 protocol is enabled.					
COMM1: Delta f					003 052
2.0	0.0	2.0	%fnom	Fig. 3-11, (p. 3-17) Fig. 3-12, (p. 3-18) Fig. 3-13, (p. 3-19)	
The measured frequency value is transmitted via the communication interface if it differs by the set delta quantity from the last measured value transmitted. **Note:** This setting is hidden unless an IEC 870-5 protocol is enabled.					

Parameter					Address
Default	**Min**	**Max**	**Unit**		**Logic Diagram**
COMM1: Delta meas.v.ILS tel					003 150
3.0	0.0	15.0		Fig. 3-11, (p. 3-17) Fig. 3-12, (p. 3-18) Fig. 3-13, (p. 3-19)	
The telegram is transmitted if a measured value differs by the set delta quantity from the last measured value transmitted. **Note:** This setting is hidden unless an IEC 870-5 protocol is enabled.					
COMM1: Delta t					003 053
1	0	15	min	Fig. 3-11, (p. 3-17) Fig. 3-12, (p. 3-18) Fig. 3-13, (p. 3-19)	
All measured values are transmitted again via the communication interface after this time period has elapsed – provided that transmission has not been triggered by the other delta conditions. **Note:** This setting is hidden unless an IEC 870-5 protocol is enabled.					
COMM1: Contin. general scan					003 077
Blocked	10	9000	s	Fig. 3-11, (p. 3-17) Fig. 3-12, (p. 3-18) Fig. 3-13, (p. 3-19)	
A continuous or background general scan means that the P633 transmits all settings, signals, and monitoring signals through the communication interface during slow periods when there is not much activity. This ensures that there will be data consistency with a connected control system. The time to be set defines the minimum time difference between two telegrams. **Note:** This setting is hidden unless an IEC 870-5 protocol is enabled.					
COMM1: Comm. address length					003 201
1	1	2	Byte	Fig. 3-12, (p. 3-18)	
Setting for the communication address length. **Note:** This setting is hidden unless the IEC 870-5-101 protocol is set.					
COMM1: Octet 2 comm. addr.					003 200
0	0	255		Fig. 3-12, (p. 3-18)	
Setting for the length of the higher-order communication address. **Note:** This setting is hidden unless the IEC 870-5-101 protocol is set.					
COMM1: Cause transm. length					003 192
1: W/o source address				Fig. 3-12, (p. 3-18)	
Setting for the length of the cause of transmission. **Note:** This setting is hidden unless the IEC 870-5-101 protocol is set.					

Parameter					Address
Default	**Min**	**Max**	**Unit**		**Logic Diagram**
COMM1: Address length ASDU					003 193
1	1	2	Byte	Fig. 3-12, (p. 3-18)	
Setting for the length of the common address for identification of telegram structures. **Note:** This setting is hidden unless the IEC 870-5-101 protocol is set. “ASDU”: Application Service Data Unit					
COMM1: Octet 2 addr. ASDU					003 194
0	0	255		Fig. 3-12, (p. 3-18)	
Setting for the length of the common higher-order address for identification of telegram structures. **Note:** This setting is hidden unless the IEC 870-5-101 protocol is set. “ASDU”: Application Service Data Unit					
COMM1: Addr.length inf.obj.					003 196
2	2	3	Byte	Fig. 3-12, (p. 3-18)	
Setting for the length of the address for information objects. **Note:** This setting is hidden unless the IEC 870-5-101 protocol is set.					
COMM1: Oct.3 addr. inf.obj.					003 197
0	0	255		Fig. 3-12, (p. 3-18)	
Setting for the length of the higher-order address for information objects. **Note:** This setting is hidden unless the IEC 870-5-101 protocol is set.					
COMM1: Inf.No.<->funct.type					003 195
0: No				Fig. 3-12, (p. 3-18)	
Setting specifying whether information numbers and function type shall be reversed in the object address. **Note:** This setting is hidden unless the IEC 870-5-101 protocol is set.					
COMM1: Time tag length					003 198
3	3	7	Byte	Fig. 3-12, (p. 3-18)	
Setting for the time tag length. **Note:** This setting is hidden unless the IEC 870-5-101 protocol is set.					
COMM1: ASDU1 / ASDU20 conv.					003 190
1: Single signal				Fig. 3-12, (p. 3-18)	
Setting specifying whether telegram structure 1 or 20 shall be converted as a single signal or double signal. **Note:** This setting is hidden unless the IEC 870-5-101 protocol is set. “ASDU”: Application Service Data Unit					

Parameter						Address
Default	**Min**	**Max**	**Unit**			**Logic Diagram**
COMM1: ASDU2 conversion						003 191
1: Single signal				Fig. 3-12, (p. 3-18)		
Setting specifying whether telegram structure 2 shall be converted as a single signal or double signal. **Note:** This setting is hidden unless the IEC 870-5-101 protocol is set. “ASDU”: Application Service Data Unit						
COMM1: Initializ. signal						003 199
1: Yes				Fig. 3-12, (p. 3-18)		
Setting specifying whether an initialization signal shall be issued. **Note:** This setting is hidden unless the IEC 870-5-101 protocol is set.						
COMM1: Balanced operation						003 226
0: No				Fig. 3-12, (p. 3-18)		
Setting that determines whether communication takes place on a balanced basis (full duplex operation). **Note:** This setting is hidden unless the IEC 870-5-101 protocol is set.						
COMM1: Direction bit						003 227
0	0	1		Fig. 3-12, (p. 3-18)		
Setting for the transmission direction. Normally this value will be set to '1' at the control center and to '0' at the substation. **Note:** This setting is hidden unless the IEC 870-5-101 protocol is enabled.						
COMM1: Time-out interval						003 228
0.40	0.10	2.55	s	Fig. 3-12, (p. 3-18)		
Setting for the maximum time that will elapse until the status signal for the acknowledgment command is issued. **Note:** This setting is hidden unless the IEC 870-5-101 protocol is set.						
COMM1: Reg.asg. selec. cmds						003 210
060 000: MAIN: Without function				Fig. 3-14, (p. 3-20)		
MODBUS registers in the range 00301 to 00400 are assigned to the selected commands. Assignment is made in the order of selection. This means that the first command is given the register no. 00301, the second the register no. 00302, etc. **Note:** This setting is hidden unless the MODBUS protocol is enabled.						
COMM1: Reg.asg. selec. sig.						003 211
060 000: MAIN: Without function				Fig. 3-14, (p. 3-20)		
MODBUS registers in the range 10301 to 10400 are assigned to the selected signals. Assignment is made in the order of selection. This means that the first signal is given the register no. 10301, the second the register no. 10302, etc. **Note:** This setting is hidden unless the MODBUS protocol is enabled.						

Parameter					Address
Default	**Min**	**Max**	**Unit**		**Logic Diagram**
COMM1: Reg.asg. sel. m.val.					003 212
060 000: MAIN: Without function				Fig. 3-14, (p. 3-20)	
MODBUS registers in the range 30301 to 30400 are assigned to the selected measured values. Assignment is made in the order of selection. This means that the first measured value is given the register no. 30301, the second the register no. 30302, etc. **Note:** This setting is hidden unless the MODBUS protocol is enabled.					
COMM1: Reg.asg. sel. param.					003 213
060 000: MAIN: Without function				Fig. 3-14, (p. 3-20)	
MODBUS registers in the range 40301 to 40400 are assigned to the selected parameters. Assignment is made in the order of selection. This means that the first parameter is given the register no. 40301, the second the register no. 40302, etc. **Note:** This setting is hidden unless the MODBUS protocol is enabled.					
COMM1: Delta t (MODBUS)					003 152
5	1	120	s	Fig. 3-14, (p. 3-20)	
All MODBUS registers are transmitted again through the communication interface after this time has elapsed. **Note:** This setting is hidden unless the MODBUS protocol is enabled.					
COMM1: Autom.event confirm.					003 249
0: Without				Fig. 3-14, (p. 3-20)	
Setting specifying whether an event must be confirmed by the master in order for an event to be deleted from the 'event queue'. **Note:** This setting is hidden unless the MODBUS protocol is enabled.					
COMM1: Phys. Charact. Delay					003 241
0	0	254	Bit	Fig. 3-15, (p. 3-21)	
Number of bits that must pass between the receipt of the 'request' and the start of sending the 'response'. **Note:** This setting is hidden unless the DNP 3.0 protocol is enabled.					
COMM1: Phys. Char. Timeout					003 242
40	0	254	Bit	Fig. 3-15, (p. 3-21)	
Number of bits that may be missing from the telegram before receipt is terminated. **Note:** This setting is hidden unless the DNP 3.0 protocol is enabled.					
COMM1: Link Confirm. Mode					003 243
1: Multi-frame fragment				Fig. 3-15, (p. 3-21)	
Setting for the acknowledgment mode of the link layer. **Note:** This setting is hidden unless the DNP 3.0 protocol is enabled.					

Parameter					Address
Default	**Min**	**Max**	**Unit**		**Logic Diagram**
COMM1: Link Confirm.Timeout					003 244
0.10	0.05	2.54	s	Fig. 3-15, (p. 3-21)	
Setting for the time period within which the master must acknowledge at the link layer. **Note:** This setting is hidden unless the DNP 3.0 protocol is enabled.					
COMM1: Link Max. Retries					003 245
2	1	10		Fig. 3-15, (p. 3-21)	
Number of repetitions that are carried out on the link layer if errors have occurred during transmission (such as failure to acknowledge). **Note:** This setting is hidden unless the DNP 3.0 protocol is enabled.					
COMM1: Appl.Confirm.Timeout					003 246
5.0	0.5	25.4	s	Fig. 3-15, (p. 3-21)	
Setting for the time period within which the master must acknowledge at the application layer. **Note:** This setting is hidden unless the DNP 3.0 protocol is enabled.					
COMM1: Appl. Need Time Del.					003 247
60	5	254	s	Fig. 3-15, (p. 3-21)	
Time interval within which the slave requests time synchronization cyclically from the master. **Note:** This setting is hidden unless the DNP 3.0 protocol is enabled.					
COMM1: Ind./cl. bin. inputs					003 232
060 000: MAIN: Without function				Fig. 3-15, (p. 3-21)	
Selection of data points and data classes for object 1 – binary inputs. Assignment of indices is made in the order of selection, beginning with 0. **Note:** This setting is hidden unless the DNP 3.0 protocol is enabled.					
COMM1: Ind./cl. bin.outputs					003 233
060 000: MAIN: Without function				Fig. 3-15, (p. 3-21)	
Selection of data points and data classes for object 10 – binary outputs. Assignment of indices is made in the order of selection, beginning with 0. **Note:** This setting is hidden unless the DNP 3.0 protocol is enabled.					
COMM1: Ind./cl. analog inp.					003 235
060 000: MAIN: Without function				Fig. 3-15, (p. 3-21)	
Selection of data points and data classes for object 30 – analog inputs. Assignment of indices is made in the order of selection, beginning with 0. **Note:** This setting is hidden unless the DNP 3.0 protocol is enabled.					

Parameter					Address
Default	**Min**	**Max**	**Unit**		**Logic Diagram**
COMM1: Ind./cl. analog outp					003 236
060 000: MAIN: Without function				Fig. 3-15, (p. 3-21)	
Selection of data points and data classes for object 40 – analog outputs. Assignment of indices is made in the order of selection, beginning with 0. **Note:** This setting is hidden unless the DNP 3.0 protocol is enabled.					
COMM1: Delta meas.v. (DNP3)					003 250
16	0	255		Fig. 3-15, (p. 3-21)	
Initialization value of threshold values for transmission of measured values in object 30. The threshold values can be changed separately by the master for each measured value by writing to object 34, 'analog input reporting deadband'. **Note:** This setting is hidden unless the DNP 3.0 protocol is enabled.					
COMM1: Delta t (DNP3)					003 248
5	1	120	s	Fig. 3-15, (p. 3-21)	
Cycle time for updating DNP object 30 (analog inputs). **Note:** This setting is hidden unless the DNP 3.0 protocol is enabled.					
COMM1: Command selection					103 042
060 000: MAIN: Without function				Fig. 3-16, (p. 3-22)	
Selection of commands to be issued via the COURIER protocol. **Note:** This setting is hidden unless the COURIER protocol is enabled.					
COMM1: Signal selection					103 043
060 000: MAIN: Without function				Fig. 3-16, (p. 3-22)	
Selection of signals to be transmitted via the COURIER protocol. **Note:** This setting is hidden unless the COURIER protocol is enabled.					
COMM1: Meas. val. selection					103 044
060 000: MAIN: Without function				Fig. 3-16, (p. 3-22)	
Selection of measured values to be transmitted via the Courier protocol. **Note:** This setting is hidden unless the Courier protocol is enabled.					
COMM1: Parameter selection					103 045
060 000: MAIN: Without function				Fig. 3-16, (p. 3-22)	
Selection of settings to be altered via the Courier protocol. **Note:** This setting is hidden unless the Courier protocol is enabled.					
COMM1: Delta t (COURIER)					103 046
5	1	120	s	Fig. 3-16, (p. 3-22)	
Cycle time at the conclusion of which the selected measured values are again transmitted. **Note:** This setting is hidden unless the COURIER protocol is enabled.					

“Logical” communication interface 2

Parameter							Address
Default	**Min**	**Max**	**Unit**				**Logic Diagram**
COMM2: Function group COMM2							056 057
0: Without							
Cancelling function group COMM2 or including it in the configuration. If the function group is cancelled from the configuration, then all associated settings and signals are hidden, with the exception of this setting.							
COMM2: General enable USER							103 170
0: No				Fig. 3-18, (p. 3-24)			
Disabling or enabling communication interface 2.							
COMM2: Line idle state							103 165
1: Light on / high				Fig. 3-18, (p. 3-24)			
Setting for the line idle state indication.							
COMM2: Baud rate							103 071
19.2: 19.2 kBaud			Baud	Fig. 3-18, (p. 3-24)			
Baud rate of the communication interface.							
COMM2: Parity bit							103 171
2: Even				Fig. 3-18, (p. 3-24)			
Set the same parity that is set at the interface of the control system connected to the P633.							
COMM2: Dead time monitoring							103 176
1: Yes				Fig. 3-18, (p. 3-24)			
The P633 monitors telegram transmission to make sure that no excessive pause occurs within a telegram. This monitoring function can be disabled if it is not required. **Note:** This setting is only necessary for modem transmission.							
COMM2: Mon. time polling							103 202
25	3	254	s	Fig. 3-18, (p. 3-24)			
The time between two polling calls from the communication master must be less than the time set here.							
COMM2: Positive ackn. fault							103 203
0: No							
It is possible to set whether or not faults can be acknowledged positively after transmission (and consequently deleted from the fault overview at the COMM2/PC interface).							

Parameter							Address
Default	**Min**	**Max**	**Unit**			**Logic Diagram**	
COMM2: Octet comm. address							103 072
1	0	254		Fig. 3-18, (p. 3-24)			
The communication address and the ASDU address are used to identify the device in communication via the interface. An identical setting must be selected for both addresses. “ASDU”: Application Service Data Unit							
COMM2: Name of manufacturer							103 161
1: SE				Fig. 3-18, (p. 3-24)			
Setting for the name of the manufacturer. **Note:** This setting can be changed to ensure compatibility.							
COMM2: Octet address ASDU							103 073
1	0	255		Fig. 3-18, (p. 3-24)			
The communication address and the ASDU address are used to identify the device in communication via the interface. An identical setting must be selected for both addresses. “ASDU”: Application Service Data Unit							
COMM2: Spontan. sig. enable							103 177
0: None				Fig. 3-18, (p. 3-24)			
Enable for the transmission of spontaneous signals via the communication interface.							
COMM2: Select. spontan.sig.							103 179
060 000: MAIN: Without function				Fig. 3-18, (p. 3-24)			
Selection of spontaneous signals for transmission via communication interface 2.							
COMM2: Transm.enab.cycl.dat							103 074
0: Without				Fig. 3-18, (p. 3-24)			
Enable for the cyclic transmission of measured values via the communication interface.							
COMM2: Cycl. data ILS tel.							103 175
060 000: MAIN: Without function				Fig. 3-18, (p. 3-24)			
Selection of the measured values transmitted in a user-defined telegram via the communication interface.							
COMM2: Delta V							103 050
3.0	0.0	15.0	%Vnom	Fig. 3-18, (p. 3-24)			
A measured voltage value is transmitted via the communication interface if it differs by the set delta quantity from the last measured value transmitted.							

Parameter							Address
Default	**Min**	**Max**	**Unit**				**Logic Diagram**
COMM2: Delta I							103 051
3.0	0.0	15.0	%Inom	Fig. 3-18, (p. 3-24)			
A measured current value is transmitted via the communication interface if it differs by the set delta quantity from the last measured value transmitted.							
COMM2: Delta f							103 052
2.0	0.0	2.0	%fnom	Fig. 3-18, (p. 3-24)			
The measured frequency value is transmitted via the communication interface if it differs by the set delta quantity from the last measured value transmitted.							
COMM2: Delta meas.v.ILS tel							103 150
3.0	0.0	15.0		Fig. 3-18, (p. 3-24)			
The telegram is transmitted if a measured value differs by the set delta quantity from the last measured value transmitted.							
COMM2: Delta t							103 053
1	0	15	min	Fig. 3-18, (p. 3-24)			
All measured values are transmitted again via the communication interface after this time period has elapsed – provided that transmission has not been triggered by the other delta conditions.							

IEC 61850 Communication

Parameter					Address
Default	Min	Max	Unit		Logic Diagram
IEC: Function group IEC					056 059
0: Without					
Cancelling function group IEC or including it in the configuration. If the function group is cancelled from the configuration, then all associated settings and signals are hidden. **Important notice:** Some of the parameters in function group IEC are set with the IEC 61850 configuration tool “IED Configurator”, they cannot be modified from the local control panel (HMI) or with the operating program, and therefore these parameters are listed separately.					
IEC: General enable USER					104 000
0: No				Fig. 3-23, (p. 3-44)	
Enabling and disabling function group IEC.					
IEC: IEC 61850 enable					104 077
0: No				Fig. 3-23, (p. 3-44)	
Disabling or enabling IEC 61850.					
IEC: IEC60870-5-104enable					104 078
0: No				Fig. 3-23, (p. 3-44)	
Disabling or enabling IEC 60870-5-104.					
IEC: ETH COMM Mode					104 080
1: PRP				Fig. 3-23, (p. 3-44)	
Selection of the redundant Ethernet protocol between *PRP*, *HSR* and *RSTP*.					
IEC: IEC prot. variant					104 084
060 000: MAIN: Without function				Fig. 3-23, (p. 3-44)	
Selection of the enabled Ethernet protocol.					
IEC: Block Port A/B					104 073
0: No				Fig. 3-23, (p. 3-44)	
When Port A/B blocked is activated, Port A for SEB or Port A&B for REB will be disabled.					
IEC: Block Port C					104 074
0: No				Fig. 3-23, (p. 3-44)	
When Port C blocked is activated, Port C will be disabled.					
IEC: Switch Config. Bank					104 043
0: don't execute				Fig. 3-23, (p. 3-44)	
This parameter can only be sent individually. Accepting the previously set communication parameters as the active communication settings.					

Parameter					Address
Default	Min	Max	Unit		Logic Diagram
IEC: Active Config. Name					104 045
2:					
Name of the configuration bank currently valid. Setting is carried out with the IED Configurator.					
IEC: Active Config. Vers.					104 046
2:					
Version number of the configuration bank currently valid. Setting is carried out with the IED Configurator.					
IEC: Inact. Config. Name					104 047
2:					
Name of the inactive configuration bank. Setting is carried out with the IED Configurator.					
IEC: Inact. Config. Vers.					104 048
2:					
Version number of the inactive configuration bank. Setting is carried out with the IED Configurator.					
IEC: IED name					104 057
2:					
Explicitly assigned unit name for the function in the system (IED); is part of the Logical Device Name. Setting is carried out with the IED Configurator. **Important note:** According to the IEC standard the name must consist of only letters (**A**..**Z**, **a**..**z**), digits (**0**..**9**) and underscore characters (_), and neither a digit nor the underscore character must be the first character. Note that a non-standard name causes problems with the IEC 61850 communication.					
IEC: IP address					104 001
2:					
Assigned IP address of the device for the server function in the system. **Note:** This is an information parameter ('read only') and its value is set from the "IED Configurator" with *Communications: IP Address*.					
IEC: Subnet mask					104 005
2:					
The subnet mask defines which part of the IP address is addressed by the sub-network and which part by the device that is logged-on to the network. **Note:** This is an information parameter ('read only') and its value is set from the "IED Configurator" with *Communications: SubNet Mask*.					

Parameter						Address
Default	Min	Max	Unit			Logic Diagram
IEC: Gateway address						104 011
2:						
This parameter shows the IPv4 address of the network gateway for communication links to clients outside of the local network. **Note:** This is an information parameter ('read only') and its value is set from the "IED Configurator" with *Communications: Gateway Address*.						
IEC: IP address 2						104 070
2:						
Assigned IP address 2 of the device for the server function in the system. **Note:** This is an information parameter ('read only') and its value is set from the "IED Configurator" with *Communications: IP Address Interface 2 (If fitted)*.						
IEC: Subnet mask 2						104 071
2:						
The subnet mask 2 defines which part of the IP address 2 is addressed by the sub-network and which part by the device that is logged-on to the network. **Note:** This is an information parameter ('read only') and its value is set from the "IED Configurator" with *Communications: SubNet Mask Interface 2 (If fitted)*.						
IEC: Gateway address 2						104 072
2:						
This parameter shows the IPv4 address of the network gateway 2 for communication links to clients outside of the local network. **Note:** This is an information parameter ('read only') and its value is set from the "IED Configurator" with *Communications: Gateway Address Interface 2 (If fitted)*.						
IEC: IP address VLAN 1						104 091
2:						
IEC: IP address VLAN 2						104 095
2:						
Assigned IP address of VLAN in the system. **Note:** This is an information parameter ('read only') and its value is set from the "IED Configurator" with Communications: IP Address.						
IEC: Identifier VLAN 1						104 092
0	0	65535				
IEC: Identifier VLAN 2						104 096
0	0	65535				
Assigned VLAN ID in the system. **Note:** This is an information parameter ('read only') and its value is set from the "IED Configurator" with Communications: Vlan ID.						
IEC: Subnet mask VLAN 1						104 093
2:						

Parameter						Address
Default	**Min**	**Max**	**Unit**			**Logic Diagram**
IEC: Subnet mask VLAN 2						104 097
2:						
The subnet mask of VLAN defines which part of the IP address is addressed by the sub-network and which part by the device that is logged-on to the network. **Note:** This is an information parameter ('read only') and its value is set from the "IED Configurator" with Communications: VLAN Subnet Mask.						
IEC: Gateway address VL 1						104 094
2:						
IEC: Gateway address VL 2						104 098
2:						
This parameter shows the network gateway of the VLAN for communication links to clients outside of the local network. **Note:** This is an information parameter ('read only') and its value is set from the "IED Configurator" with Communications: Gateway Address.						
IEC: SNTP server 1 IP						104 202
2:						
IP address of the preferred server used for clock synchronization. **Note:** This is an information parameter ('read only') and its value is set from the "IED Configurator".						
IEC: SNTP server 2 IP						104 210
2:						
IP address of the backup server used for clock synchronization. **Note:** This is an information parameter ('read only') and its value is set from the "IED Configurator".						
IEC: SGCB ResvTms						104 199
30	0	600				
The configuration attribute ResvTms defines the time interval in seconds a reservation of a SGCB is granted to a client. A reservation of a SGCB starts after a successful SettingGroup edition has been successfully processed with the service SelectEditSG.						
IEC: SigGGIO1 selection						104 064
060 000: MAIN: Without function				Fig. 3-23, (p. 3-44)		
Optional signal assignment for a transmission per communication protocol IEC 61850 based on the selection table of the binary inputs (opto coupler inputs).						
IEC: Diff. local time						104 206
0	-1440	1440	min	Fig. 3-23, (p. 3-44)		
Time difference between UTC and local time at the devices' substation (IED).						

Parameter							Address
Default	**Min**	**Max**	**Unit**				**Logic Diagram**
IEC: Diff. dayl.sav. time							104 207
60	-1440	1440	min	Fig. 3-23, (p. 3-44)			
Time difference of the daylight saving time to standard time.							
IEC: Switch.dayl.sav.time							104 219
1: Yes				Fig. 3-23, (p. 3-44)			
This setting defines whether an automatic switching to daylight saving time is wanted. If it is wanted, the time switching is executed upon receiving a related SNTP frame.							
IEC: Dayl.sav.time start							104 220
5: Last				Fig. 3-23, (p. 3-44)			
IEC: Dayl.sav.time st. d							104 221
7: Sunday				Fig. 3-23, (p. 3-44)			
IEC: Dayl.sav.time st. m							104 222
3: March				Fig. 3-23, (p. 3-44)			
These three parameters define the date (e.g. at what day of the year) for switching from standard time over to daylight saving time. Available for **IEC: Dayl.sav.time start** are the values *First*, *Second*, *Third*, *Fourth*, and *Last*. For **IEC: Dayl.sav.time st. d** the seven weekdays are available so that for example a setting like “on the last Sunday in March” may be used.							
IEC: Dayl.sav.t.st.0:00 +							104 223
120	0	1440	min	Fig. 3-23, (p. 3-44)			
Time period in minutes after midnight when daylight saving time is switched to standard time. If for example the clock is advanced one hour from 2:00 AM to 3:00 AM the parameter **IEC: Dayl.sav.t.st.0:00 +** is set to 120 (minutes).							
IEC: Dayl.sav.time end							104 225
5: Last				Fig. 3-23, (p. 3-44)			
IEC: Dayl.sav.time end d							104 226
7: Sunday				Fig. 3-23, (p. 3-44)			
IEC: Dayl.sav.time end m							104 227
10: October				Fig. 3-23, (p. 3-44)			
IEC: Dayl.sav.t.end 0:00+							104 228
180	0	1440	min	Fig. 3-23, (p. 3-44)			
This parameter defines the date and time of day for the clock changeover from daylight saving time to standard time. The setting is similar to that for the clock changeover to daylight saving time.							

Generic Object Orientated Substation Events

Parameter					Address
Default	Min	Max	Unit		Logic Diagram
GOOSE: Function group GOOSE					056 068
0: Without					
Cancelling function group GOOSE or including it in the configuration. If the function group is cancelled from the configuration, then all associated settings and signals are hidden. Parameters included in this function group are only effective when function group IEC is configured and enabled and when the parameters in this function group have been activated by setting the parameter **IEC: Switch Config. Bank**.					
GOOSE: General enable USER					106 001
0: No					
Enabling and disabling function group GOOSE.					
GOOSE: Input 1 fct.assig.					107 006
061 000: MAIN: Without function					
GOOSE: Input 2 fct.assig.					107 016
061 000: MAIN: Without function					
GOOSE: Input 3 fct.assig.					107 026
061 000: MAIN: Without function					
GOOSE: Input 4 fct.assig.					107 036
061 000: MAIN: Without function					
GOOSE: Input 5 fct.assig.					107 046
061 000: MAIN: Without function					
GOOSE: Input 6 fct.assig.					107 056
061 000: MAIN: Without function					
GOOSE: Input 7 fct.assig.					107 066
061 000: MAIN: Without function					
GOOSE: Input 8 fct.assig.					107 076
061 000: MAIN: Without function					
GOOSE: Input 9 fct.assig.					107 086
061 000: MAIN: Without function					
GOOSE: Input 10 fct.assig.					107 096
061 000: MAIN: Without function					
GOOSE: Input 11 fct.assig.					107 106
061 000: MAIN: Without function					
GOOSE: Input 12 fct.assig.					107 116
061 000: MAIN: Without function					

Parameter						Address
Default	Min	Max	Unit			Logic Diagram
GOOSE: Input 13 fct.assig.						107 126
061 000: MAIN: Without function						
GOOSE: Input 14 fct.assig.						107 136
061 000: MAIN: Without function						
GOOSE: Input 15 fct.assig.						107 146
061 000: MAIN: Without function						
GOOSE: Input 16 fct.assig.						107 156
061 000: MAIN: Without function						
GOOSE: Input 17 fct.assig.						107 157
061 000: MAIN: Without function						
GOOSE: Input 18 fct.assig.						107 158
061 000: MAIN: Without function						
GOOSE: Input 19 fct.assig.						107 159
061 000: MAIN: Without function						
GOOSE: Input 20 fct.assig.						107 160
061 000: MAIN: Without function						
GOOSE: Input 21 fct.assig.						107 161
061 000: MAIN: Without function						
GOOSE: Input 22 fct.assig.						107 162
061 000: MAIN: Without function						
GOOSE: Input 23 fct.assig.						107 163
061 000: MAIN: Without function						
GOOSE: Input 24 fct.assig.						107 164
061 000: MAIN: Without function						
GOOSE: Input 25 fct.assig.						107 165
061 000: MAIN: Without function						
GOOSE: Input 26 fct.assig.						107 166
061 000: MAIN: Without function						
GOOSE: Input 27 fct.assig.						107 167
061 000: MAIN: Without function						
GOOSE: Input 28 fct.assig.						107 168
061 000: MAIN: Without function						
GOOSE: Input 29 fct.assig.						107 169
061 000: MAIN: Without function						
GOOSE: Input 30 fct.assig.						107 170
061 000: MAIN: Without function						
GOOSE: Input 31 fct.assig.						107 171
061 000: MAIN: Without function						

Parameter					Address
Default	Min	Max	Unit		Logic Diagram
GOOSE: Input 32 fct.assig.					107 172
061 000: MAIN: Without function					
GOOSE: Input 33 fct.assig.					112 000
061 000: MAIN: Without function					
GOOSE: Input 34 fct.assig.					112 001
061 000: MAIN: Without function					
GOOSE: Input 35 fct.assig.					112 002
061 000: MAIN: Without function					
GOOSE: Input 36 fct.assig.					112 003
061 000: MAIN: Without function					
GOOSE: Input 37 fct.assig.					112 004
061 000: MAIN: Without function					
GOOSE: Input 38 fct.assig.					112 005
061 000: MAIN: Without function					
GOOSE: Input 39 fct.assig.					112 006
061 000: MAIN: Without function					
GOOSE: Input 40 fct.assig.					112 007
061 000: MAIN: Without function					
GOOSE: Input 41 fct.assig.					112 008
061 000: MAIN: Without function					
GOOSE: Input 42 fct.assig.					112 009
061 000: MAIN: Without function					
GOOSE: Input 43 fct.assig.					112 010
061 000: MAIN: Without function					
GOOSE: Input 44 fct.assig.					112 011
061 000: MAIN: Without function					
GOOSE: Input 45 fct.assig.					112 012
061 000: MAIN: Without function					
GOOSE: Input 46 fct.assig.					112 013
061 000: MAIN: Without function					
GOOSE: Input 47 fct.assig.					112 014
061 000: MAIN: Without function					
GOOSE: Input 48 fct.assig.					112 015
061 000: MAIN: Without function					
GOOSE: Input 49 fct.assig.					112 016
061 000: MAIN: Without function					
GOOSE: Input 50 fct.assig.					112 017
061 000: MAIN: Without function					

Parameter						Address
Default	Min	Max	Unit			Logic Diagram
GOOSE: Input 51 fct.assig.						112 018
061 000: MAIN: Without function						
GOOSE: Input 52 fct.assig.						112 019
061 000: MAIN: Without function						
GOOSE: Input 53 fct.assig.						112 020
061 000: MAIN: Without function						
GOOSE: Input 54 fct.assig.						112 021
061 000: MAIN: Without function						
GOOSE: Input 55 fct.assig.						112 022
061 000: MAIN: Without function						
GOOSE: Input 56 fct.assig.						112 023
061 000: MAIN: Without function						
GOOSE: Input 57 fct.assig.						112 024
061 000: MAIN: Without function						
GOOSE: Input 58 fct.assig.						112 025
061 000: MAIN: Without function						
GOOSE: Input 59 fct.assig.						112 026
061 000: MAIN: Without function						
GOOSE: Input 60 fct.assig.						112 027
061 000: MAIN: Without function						
GOOSE: Input 61 fct.assig.						112 028
061 000: MAIN: Without function						
GOOSE: Input 62 fct.assig.						112 029
061 000: MAIN: Without function						
GOOSE: Input 63 fct.assig.						112 030
061 000: MAIN: Without function						
GOOSE: Input 64 fct.assig.						112 031
061 000: MAIN: Without function						
GOOSE: Input 65 fct.assig.						112 032
061 000: MAIN: Without function						
GOOSE: Input 66 fct.assig.						112 033
061 000: MAIN: Without function						
GOOSE: Input 67 fct.assig.						112 034
061 000: MAIN: Without function						
GOOSE: Input 68 fct.assig.						112 035
061 000: MAIN: Without function						
GOOSE: Input 69 fct.assig.						112 036
061 000: MAIN: Without function						

Parameter					Address
Default	Min	Max	Unit		Logic Diagram
GOOSE: Input 70 fct.assig.					112 037
061 000: MAIN: Without function					
GOOSE: Input 71 fct.assig.					112 038
061 000: MAIN: Without function					
GOOSE: Input 72 fct.assig.					112 039
061 000: MAIN: Without function					
GOOSE: Input 73 fct.assig.					112 040
061 000: MAIN: Without function					
GOOSE: Input 74 fct.assig.					112 041
061 000: MAIN: Without function					
GOOSE: Input 75 fct.assig.					112 042
061 000: MAIN: Without function					
GOOSE: Input 76 fct.assig.					112 043
061 000: MAIN: Without function					
GOOSE: Input 77 fct.assig.					112 044
061 000: MAIN: Without function					
GOOSE: Input 78 fct.assig.					112 045
061 000: MAIN: Without function					
GOOSE: Input 79 fct.assig.					112 046
061 000: MAIN: Without function					
GOOSE: Input 80 fct.assig.					112 047
061 000: MAIN: Without function					
GOOSE: Input 81 fct.assig.					112 048
061 000: MAIN: Without function					
GOOSE: Input 82 fct.assig.					112 049
061 000: MAIN: Without function					
GOOSE: Input 83 fct.assig.					112 050
061 000: MAIN: Without function					
GOOSE: Input 84 fct.assig.					112 051
061 000: MAIN: Without function					
GOOSE: Input 85 fct.assig.					112 052
061 000: MAIN: Without function					
GOOSE: Input 86 fct.assig.					112 053
061 000: MAIN: Without function					
GOOSE: Input 87 fct.assig.					112 054
061 000: MAIN: Without function					
GOOSE: Input 88 fct.assig.					112 055
061 000: MAIN: Without function					

Parameter					Address
Default	Min	Max	Unit		Logic Diagram
GOOSE: Input 89 fct.assig.					112 056
061 000: MAIN: Without function					
GOOSE: Input 90 fct.assig.					112 057
061 000: MAIN: Without function					
GOOSE: Input 91 fct.assig.					112 058
061 000: MAIN: Without function					
GOOSE: Input 92 fct.assig.					112 059
061 000: MAIN: Without function					
GOOSE: Input 93 fct.assig.					112 060
061 000: MAIN: Without function					
GOOSE: Input 94 fct.assig.					112 061
061 000: MAIN: Without function					
GOOSE: Input 95 fct.assig.					112 062
061 000: MAIN: Without function					
GOOSE: Input 96 fct.assig.					112 063
061 000: MAIN: Without function					
GOOSE: Input 97 fct.assig.					112 064
061 000: MAIN: Without function					
GOOSE: Input 98 fct.assig.					112 065
061 000: MAIN: Without function					
GOOSE: Input 99 fct.assig.					112 066
061 000: MAIN: Without function					
GOOSE: Input 100 fct.assig.					112 067
061 000: MAIN: Without function					
GOOSE: Input 101 fct.assig.					112 068
061 000: MAIN: Without function					
GOOSE: Input 102 fct.assig.					112 069
061 000: MAIN: Without function					
GOOSE: Input 103 fct.assig.					112 070
061 000: MAIN: Without function					
GOOSE: Input 104 fct.assig.					112 071
061 000: MAIN: Without function					
GOOSE: Input 105 fct.assig.					112 072
061 000: MAIN: Without function					
GOOSE: Input 106 fct.assig.					112 073
061 000: MAIN: Without function					
GOOSE: Input 107 fct.assig.					112 074
061 000: MAIN: Without function					

Parameter						Address
Default	Min	Max	Unit			Logic Diagram
GOOSE: Input 108 fct.assig.						112 075
061 000: MAIN: Without function						
GOOSE: Input 109 fct.assig.						112 076
061 000: MAIN: Without function						
GOOSE: Input 110 fct.assig.						112 077
061 000: MAIN: Without function						
GOOSE: Input 111 fct.assig.						112 078
061 000: MAIN: Without function						
GOOSE: Input 112 fct.assig.						112 079
061 000: MAIN: Without function						
GOOSE: Input 113 fct.assig.						112 080
061 000: MAIN: Without function						
GOOSE: Input 114 fct.assig.						112 081
061 000: MAIN: Without function						
GOOSE: Input 115 fct.assig.						112 082
061 000: MAIN: Without function						
GOOSE: Input 116 fct.assig.						112 083
061 000: MAIN: Without function						
GOOSE: Input 117 fct.assig.						112 084
061 000: MAIN: Without function						
GOOSE: Input 118 fct.assig.						112 085
061 000: MAIN: Without function						
GOOSE: Input 119 fct.assig.						112 086
061 000: MAIN: Without function						
GOOSE: Input 120 fct.assig.						112 087
061 000: MAIN: Without function						
GOOSE: Input 121 fct.assig.						112 088
061 000: MAIN: Without function						
GOOSE: Input 122 fct.assig.						112 089
061 000: MAIN: Without function						
GOOSE: Input 123 fct.assig.						112 090
061 000: MAIN: Without function						
GOOSE: Input 124 fct.assig.						112 091
061 000: MAIN: Without function						
GOOSE: Input 125 fct.assig.						112 092
061 000: MAIN: Without function						
GOOSE: Input 126 fct.assig.						112 093
061 000: MAIN: Without function						

Parameter					Address
Default	Min	Max	Unit		Logic Diagram
GOOSE: Input 127 fct.assig.					112 094
061 000: MAIN: Without function					
GOOSE: Input 128 fct.assig.					112 095
061 000: MAIN: Without function					

Function assignment of the virtual binary GOOSE inputs (GosGGIO1/Pos1.stVal, GosGGIO1/Pos2.stVal, ...) to a binary logical state signal on the device so that they can be processed further by the protection, control or logic functions. Signals configured here contain the received and pre-processed state of data attributes configured for GOOSE receipt.

Virtual Inputs

Parameter					Address
Default	Min	Max	Unit		Logic Diagram
VINP: Function group VINP					056 098
0: Without					
Cancelling function group VINP or including it in the configuration. If the function group is cancelled from the configuration, then all associated settings and signals are hidden.					
VINP: General enable USER					115 000
0: No					
Disabling or enabling VINP function.					
VINP: Input 1 fct.assig.					115 150
061 000: MAIN: Without function					
VINP: Input 2 fct.assig.					115 151
061 000: MAIN: Without function					
VINP: Input 3 fct.assig.					115 152
061 000: MAIN: Without function					
VINP: Input 4 fct.assig.					115 153
061 000: MAIN: Without function					
VINP: Input 5 fct.assig.					115 154
061 000: MAIN: Without function					
VINP: Input 6 fct.assig.					115 155
061 000: MAIN: Without function					
VINP: Input 7 fct.assig.					115 156
061 000: MAIN: Without function					
VINP: Input 8 fct.assig.					115 157
061 000: MAIN: Without function					
VINP: Input 9 fct.assig.					115 158
061 000: MAIN: Without function					
VINP: Input 10 fct.assig.					115 159
061 000: MAIN: Without function					
VINP: Input 11 fct.assig.					115 160
061 000: MAIN: Without function					
VINP: Input 12 fct.assig.					115 161
061 000: MAIN: Without function					
VINP: Input 13 fct.assig.					115 162
061 000: MAIN: Without function					
VINP: Input 14 fct.assig.					115 163
061 000: MAIN: Without function					

Parameter						Address
Default	Min	Max	Unit		Logic Diagram	
VINP: Input 15 fct.assig.						115 164
061 000: MAIN: Without function						
VINP: Input 16 fct.assig.						115 165
061 000: MAIN: Without function						
VINP: Input 17 fct.assig.						115 166
061 000: MAIN: Without function						
VINP: Input 18 fct.assig.						115 167
061 000: MAIN: Without function						
VINP: Input 19 fct.assig.						115 168
061 000: MAIN: Without function						
VINP: Input 20 fct.assig.						115 169
061 000: MAIN: Without function						
VINP: Input 21 fct.assig.						115 170
061 000: MAIN: Without function						
VINP: Input 22 fct.assig.						115 171
061 000: MAIN: Without function						
VINP: Input 23 fct.assig.						115 172
061 000: MAIN: Without function						
VINP: Input 24 fct.assig.						115 173
061 000: MAIN: Without function						
VINP: Input 25 fct.assig.						115 174
061 000: MAIN: Without function						
VINP: Input 26 fct.assig.						115 175
061 000: MAIN: Without function						
VINP: Input 27 fct.assig.						115 176
061 000: MAIN: Without function						
VINP: Input 28 fct.assig.						115 177
061 000: MAIN: Without function						
VINP: Input 29 fct.assig.						115 178
061 000: MAIN: Without function						
VINP: Input 30 fct.assig.						115 179
061 000: MAIN: Without function						
VINP: Input 31 fct.assig.						115 180
061 000: MAIN: Without function						
VINP: Input 32 fct.assig.						115 181
061 000: MAIN: Without function						
VINP: Input 33 fct.assig.						115 182
061 000: MAIN: Without function						

Parameter						Address
Default	Min	Max	Unit			Logic Diagram
VINP: Input 34 fct.assig.						115 183
061 000: MAIN: Without function						
VINP: Input 35 fct.assig.						115 184
061 000: MAIN: Without function						
VINP: Input 36 fct.assig.						115 185
061 000: MAIN: Without function						
VINP: Input 37 fct.assig.						115 186
061 000: MAIN: Without function						
VINP: Input 38 fct.assig.						115 187
061 000: MAIN: Without function						
VINP: Input 39 fct.assig.						115 188
061 000: MAIN: Without function						
VINP: Input 40 fct.assig.						115 189
061 000: MAIN: Without function						
VINP: Input 41 fct.assig.						115 190
061 000: MAIN: Without function						
VINP: Input 42 fct.assig.						115 191
061 000: MAIN: Without function						
VINP: Input 43 fct.assig.						115 192
061 000: MAIN: Without function						
VINP: Input 44 fct.assig.						115 193
061 000: MAIN: Without function						
VINP: Input 45 fct.assig.						115 194
061 000: MAIN: Without function						
VINP: Input 46 fct.assig.						115 195
061 000: MAIN: Without function						
VINP: Input 47 fct.assig.						115 196
061 000: MAIN: Without function						
VINP: Input 48 fct.assig.						115 197
061 000: MAIN: Without function						
VINP: Input 49 fct.assig.						115 198
061 000: MAIN: Without function						
VINP: Input 50 fct.assig.						115 199
061 000: MAIN: Without function						
VINP: Input 51 fct.assig.						115 200
061 000: MAIN: Without function						
VINP: Input 52 fct.assig.						115 201
061 000: MAIN: Without function						

Parameter						Address
Default	Min	Max	Unit		Logic Diagram	
VINP: Input 53 fct.assig.						115 202
061 000: MAIN: Without function						
VINP: Input 54 fct.assig.						115 203
061 000: MAIN: Without function						
VINP: Input 55 fct.assig.						115 204
061 000: MAIN: Without function						
VINP: Input 56 fct.assig.						115 205
061 000: MAIN: Without function						
VINP: Input 57 fct.assig.						115 206
061 000: MAIN: Without function						
VINP: Input 58 fct.assig.						115 207
061 000: MAIN: Without function						
VINP: Input 59 fct.assig.						115 208
061 000: MAIN: Without function						
VINP: Input 60 fct.assig.						115 209
061 000: MAIN: Without function						
VINP: Input 61 fct.assig.						115 210
061 000: MAIN: Without function						
VINP: Input 62 fct.assig.						115 211
061 000: MAIN: Without function						
VINP: Input 63 fct.assig.						115 212
061 000: MAIN: Without function						
VINP: Input 64 fct.assig.						115 213
061 000: MAIN: Without function						
Function assignment of the virtual binary inputs VINP to a binary logical state signal on the device so that they can be processed further by the protection, control or logic functions.						

IRIG-B interface

Parameter						Address
Default	Min	Max	Unit		Logic Diagram	
IRIGB: Function group IRIGB						056 072
0: Without						
Cancelling function group IRIGB or including it in the configuration. If the function group is cancelled from the configuration, then all associated settings and signals are hidden.						
IRIGB: General enable USER						023 200
0: No					Fig. 3-29, (p. 3-51)	
Disabling or enabling the IRIG-B interface.						

Configurable function keys

Parameter						Address
Default	Min	Max	Unit			Logic Diagram
F_KEY: Password funct.key 1						003 036
0	0	4444				
F_KEY: Password funct.key 2						030 242
0	0	4444				
F_KEY: Password funct.key 3						030 243
0	0	4444				
F_KEY: Password funct.key 4						030 244
0	0	4444				
F_KEY: Password funct.key 5						030 245
0	0	4444				
F_KEY: Password funct.key 6						030 246
0	0	4444				
Definition of the password for enabling the function keys.						
F_KEY: Fct. assignm. F1						080 112
061 000: MAIN: Without function						
F_KEY: Fct. assignm. F2						080 113
061 000: MAIN: Without function						
F_KEY: Fct. assignm. F3						080 114
061 000: MAIN: Without function						
F_KEY: Fct. assignm. F4						080 115
061 000: MAIN: Without function						
F_KEY: Fct. assignm. F5						080 116
061 000: MAIN: Without function						
F_KEY: Fct. assignm. F6						080 117
061 000: MAIN: Without function						
Assignment of functions to the function keys. Either a single function or a menu jump list may be selected. There are two menu jump lists, which are assembled at **LOC: Fct. menu jmp list 1** or **LOC: Fct. menu jmp list 2**, respectively.						
F_KEY: Operating mode F1						080 132
1: Key						
F_KEY: Operating mode F2						080 133
1: Key						
F_KEY: Operating mode F3						080 134
1: Key						
F_KEY: Operating mode F4						080 135
1: Key						

Parameter							Address
Default	Min	Max	Unit			Logic	Diagram
F_KEY: Operating mode F5							080 136
1: Key							
F_KEY: Operating mode F6							080 137
1: Key							
Choice between operation of the function key as a key or switch.							
F_KEY: Return time fct.keys							003 037
10	1	60000	s				
Once the password has been entered, the function keys remain active for no longer than this time. Thereafter, the function keys are disabled until the password is entered again.							

Binary input

Parameter						Address
Default	**Min**	**Max**	**Unit**			**Logic Diagram**
INP: Filter						010 220
0	0	20		Fig. 3-31, (p. 3-55)		
Input filter which is activated when either the mode *Active "high", filt.* or *Active "low", filt.* has been selected for **INP: Oper. mode U xxx**. In order to suppress transient interference peaks at the logic signal inputs it is suggested to set this parameter to *6 [steps]*.						
INP: Fct. assignm. U 901						152 145
061 000: MAIN: Without function						
INP: Fct. assignm. U 902						152 148
061 000: MAIN: Without function						
INP: Fct. assignm. U 903						152 151
061 000: MAIN: Without function						
INP: Fct. assignm. U 904						152 154
061 000: MAIN: Without function						
INP: Fct. assignm. U 1001						152 163
061 000: MAIN: Without function						
INP: Fct. assignm. U 1002						152 166
061 000: MAIN: Without function						
INP: Fct. assignm. U 1003						152 169
061 000: MAIN: Without function						
INP: Fct. assignm. U 1004						152 172
061 000: MAIN: Without function						
INP: Fct. assignm. U 1005						152 175
061 000: MAIN: Without function						
INP: Fct. assignm. U 1006						152 178
061 000: MAIN: Without function						
INP: Fct. assignm. U 1201						152 199
061 000: MAIN: Without function						
INP: Fct. assignm. U 1202						152 202
061 000: MAIN: Without function						
INP: Fct. assignm. U 1203						152 205
061 000: MAIN: Without function						
INP: Fct. assignm. U 1204						152 208
061 000: MAIN: Without function						
INP: Fct. assignm. U 1401						190 002
061 000: MAIN: Without function						
INP: Fct. assignm. U 1402						190 006
061 000: MAIN: Without function						

Parameter						Address
Default	Min	Max	Unit		Logic Diagram	
INP: Fct. assignm. U 1403						190 010
061 000: MAIN: Without function						
INP: Fct. assignm. U 1404						190 014
061 000: MAIN: Without function						
INP: Fct. assignm. U 1405						190 018
061 000: MAIN: Without function						
INP: Fct. assignm. U 1406						190 022
061 000: MAIN: Without function						
INP: Fct. assignm. U 1407						190 026
061 000: MAIN: Without function						
INP: Fct. assignm. U 1408						190 030
061 000: MAIN: Without function						
INP: Fct. assignm. U 1409						190 034
061 000: MAIN: Without function						
INP: Fct. assignm. U 1410						190 038
061 000: MAIN: Without function						
INP: Fct. assignm. U 1411						190 042
061 000: MAIN: Without function						
INP: Fct. assignm. U 1412						190 046
061 000: MAIN: Without function						
INP: Fct. assignm. U 1413						190 050
061 000: MAIN: Without function						
INP: Fct. assignm. U 1414						190 054
061 000: MAIN: Without function						
INP: Fct. assignm. U 1415						190 058
061 000: MAIN: Without function						
INP: Fct. assignm. U 1416						190 062
061 000: MAIN: Without function						
INP: Fct. assignm. U 1417						190 066
061 000: MAIN: Without function						
INP: Fct. assignm. U 1418						190 070
061 000: MAIN: Without function						
INP: Fct. assignm. U 1419						190 074
061 000: MAIN: Without function						
INP: Fct. assignm. U 1420						190 078
061 000: MAIN: Without function						
INP: Fct. assignm. U 1421						190 082
061 000: MAIN: Without function						

Parameter						Address
Default	Min	Max	Unit			Logic Diagram
INP: Fct. assignm. U 1422						190 086
061 000: MAIN: Without function						
INP: Fct. assignm. U 1423						190 090
061 000: MAIN: Without function						
INP: Fct. assignm. U 1424						190 094
061 000: MAIN: Without function						
INP: Fct. assignm. U 1601						192 002
061 000: MAIN: Without function						
INP: Fct. assignm. U 1602						192 006
061 000: MAIN: Without function						
INP: Fct. assignm. U 1603						192 010
061 000: MAIN: Without function						
INP: Fct. assignm. U 1604						192 014
061 000: MAIN: Without function						
INP: Fct. assignm. U 1605						192 018
061 000: MAIN: Without function						
INP: Fct. assignm. U 1606						192 022
061 000: MAIN: Without function						
INP: Fct. assignm. U 1801						194 002
061 000: MAIN: Without function						
INP: Fct. assignm. U 1802						194 006
061 000: MAIN: Without function						
INP: Fct. assignm. U 1803						194 010
061 000: MAIN: Without function						
INP: Fct. assignm. U 1804						194 014
061 000: MAIN: Without function						
INP: Fct. assignm. U 1805						194 018
061 000: MAIN: Without function						
INP: Fct. assignm. U 1806						194 022
061 000: MAIN: Without function						
INP: Fct. assignm. U 2001						153 087
061 000: MAIN: Without function						
INP: Fct. assignm. U 2002						153 090
061 000: MAIN: Without function						
INP: Fct. assignm. U 2003						153 093
061 000: MAIN: Without function						

Parameter						Address
Default	Min	Max	Unit			Logic Diagram
INP: Fct. assignm. U 2004						153 096
061 000: MAIN: Without function						
Assignment of functions to binary signal inputs.						
INP: Oper. mode U 901						152 146
1: Active "high"						
INP: Oper. mode U 902						152 149
1: Active "high"						
INP: Oper. mode U 903						152 152
1: Active "high"						
INP: Oper. mode U 904						152 155
1: Active "high"						
INP: Oper. mode U 1001						152 164
1: Active "high"						
INP: Oper. mode U 1002						152 167
1: Active "high"						
INP: Oper. mode U 1003						152 170
1: Active "high"						
INP: Oper. mode U 1004						152 173
1: Active "high"						
INP: Oper. mode U 1005						152 176
1: Active "high"						
INP: Oper. mode U 1006						152 179
1: Active "high"						
INP: Oper. mode U 1201						152 200
1: Active "high"						
INP: Oper. mode U 1202						152 203
1: Active "high"						
INP: Oper. mode U 1203						152 206
1: Active "high"						
INP: Oper. mode U 1204						152 209
1: Active "high"						
INP: Oper. mode U 1401						190 003
1: Active "high"						
INP: Oper. mode U 1402						190 007
1: Active "high"						
INP: Oper. mode U 1403						190 011
1: Active "high"						

Parameter						Address
Default	Min	Max	Unit			Logic Diagram
INP: Oper. mode U 1404						190 015
1: Active "high"						
INP: Oper. mode U 1405						190 019
1: Active "high"						
INP: Oper. mode U 1406						190 023
1: Active "high"						
INP: Oper. mode U 1407						190 027
1: Active "high"						
INP: Oper. mode U 1408						190 031
1: Active "high"						
INP: Oper. mode U 1409						190 035
1: Active "high"						
INP: Oper. mode U 1410						190 039
1: Active "high"						
INP: Oper. mode U 1411						190 043
1: Active "high"						
INP: Oper. mode U 1412						190 047
1: Active "high"						
INP: Oper. mode U 1413						190 051
1: Active "high"						
INP: Oper. mode U 1414						190 055
1: Active "high"						
INP: Oper. mode U 1415						190 059
1: Active "high"						
INP: Oper. mode U 1416						190 063
1: Active "high"						
INP: Oper. mode U 1417						190 067
1: Active "high"						
INP: Oper. mode U 1418						190 071
1: Active "high"						
INP: Oper. mode U 1419						190 075
1: Active "high"						
INP: Oper. mode U 1420						190 079
1: Active "high"						
INP: Oper. mode U 1421						190 083
1: Active "high"						
INP: Oper. mode U 1422						190 087
1: Active "high"						

Parameter						Address
Default	Min	Max	Unit		Logic Diagram	
INP: Oper. mode U 1423						190 091
1: Active "high"						
INP: Oper. mode U 1424						190 095
1: Active "high"						
INP: Oper. mode U 1601						192 003
1: Active "high"						
INP: Oper. mode U 1602						192 007
1: Active "high"						
INP: Oper. mode U 1603						192 011
1: Active "high"						
INP: Oper. mode U 1604						192 015
1: Active "high"						
INP: Oper. mode U 1605						192 019
1: Active "high"						
INP: Oper. mode U 1606						192 023
1: Active "high"						
INP: Oper. mode U 1801						194 003
1: Active "high"						
INP: Oper. mode U 1802						194 007
1: Active "high"						
INP: Oper. mode U 1803						194 011
1: Active "high"						
INP: Oper. mode U 1804						194 015
1: Active "high"						
INP: Oper. mode U 1805						194 019
1: Active "high"						
INP: Oper. mode U 1806						194 023
1: Active "high"						
INP: Oper. mode U 2001						153 088
1: Active "high"						
INP: Oper. mode U 2002						153 091
1: Active "high"						
INP: Oper. mode U 2003						153 094
1: Active "high"						
INP: Oper. mode U 2004						153 097
1: Active "high"						
Selection of operating mode for binary signal inputs.						

Measured data input

Parameter						Address
Default	**Min**	**Max**	**Unit**			**Logic Diagram**
MEASI: Function group MEASI						056 030
0: Without						
Cancelling function group MEASI or including it in the configuration. If the function group is cancelled from the configuration, then all associated settings and signals are hidden.						
MEASI: General enable USER						011 100
0: No				Fig. 3-32, (p. 3-56) Fig. 3-40, (p. 3-65)		
Disabling or enabling analog measured data input.						
MEASI: Enable IDC p.u.						037 190
0.000	0.000	0.200	IDC,nom	Fig. 3-35, (p. 3-59)		
Setting for the minimum current that must flow in order for the P633 to display a measured value > 0 (zero suppression).						
MEASI: IDC< open circuit						037 191
3.0	0.0	10.0	mA	Fig. 3-35, (p. 3-59)		
If the input current falls below the set threshold, the P633 will issue an “open circuit” signal.						
MEASI: IDC 1						037 150
0.000	0.000	1.200	IDC,nom	Fig. 3-35, (p. 3-59)		
MEASI: IDC 2						037 152
Blocked	0.000	1.200	IDC,nom	Fig. 3-35, (p. 3-59)		
MEASI: IDC 3						037 154
Blocked	0.000	1.200	IDC,nom	Fig. 3-35, (p. 3-59)		
MEASI: IDC 4						037 156
Blocked	0.000	1.200	IDC,nom	Fig. 3-35, (p. 3-59)		
MEASI: IDC 5						037 158
Blocked	0.000	1.200	IDC,nom	Fig. 3-35, (p. 3-59)		
MEASI: IDC 6						037 160
Blocked	0.000	1.200	IDC,nom	Fig. 3-35, (p. 3-59)		
MEASI: IDC 7						037 162
Blocked	0.000	1.200	IDC,nom	Fig. 3-35, (p. 3-59)		
MEASI: IDC 8						037 164
Blocked	0.000	1.200	IDC,nom	Fig. 3-35, (p. 3-59)		
MEASI: IDC 9						037 166
Blocked	0.000	1.200	IDC,nom	Fig. 3-35, (p. 3-59)		
MEASI: IDC 10						037 168
Blocked	0.000	1.200	IDC,nom	Fig. 3-35, (p. 3-59)		

Parameter							Address
Default	**Min**	**Max**	**Unit**			**Logic Diagram**	
MEASI: IDC 11							037 170
Blocked	0.000	1.200	IDC,nom	Fig. 3-35, (p. 3-59)			
MEASI: IDC 12							037 172
Blocked	0.000	1.200	IDC,nom	Fig. 3-35, (p. 3-59)			
MEASI: IDC 13							037 174
Blocked	0.000	1.200	IDC,nom	Fig. 3-35, (p. 3-59)			
MEASI: IDC 14							037 176
Blocked	0.000	1.200	IDC,nom	Fig. 3-35, (p. 3-59)			
MEASI: IDC 15							037 178
Blocked	0.000	1.200	IDC,nom	Fig. 3-35, (p. 3-59)			
MEASI: IDC 16							037 180
Blocked	0.000	1.200	IDC,nom	Fig. 3-35, (p. 3-59)			
MEASI: IDC 17							037 182
Blocked	0.000	1.200	IDC,nom	Fig. 3-35, (p. 3-59)			
MEASI: IDC 18							037 184
Blocked	0.000	1.200	IDC,nom	Fig. 3-35, (p. 3-59)			
MEASI: IDC 19							037 186
Blocked	0.000	1.200	IDC,nom	Fig. 3-35, (p. 3-59)			
MEASI: IDC 20							037 188
1.200	0.000	1.200	IDC,nom	Fig. 3-35, (p. 3-59)			
Setting for the input current that will correspond to a linearized value that has been set accordingly.							
MEASI: IDC,lin 1							037 151
0.000	0.000	1.200	IDC,nom	Fig. 3-35, (p. 3-59)			
MEASI: IDC,lin 2							037 153
Blocked	0.000	1.200	IDC,nom	Fig. 3-35, (p. 3-59)			
MEASI: IDC,lin 3							037 155
Blocked	0.000	1.200	IDC,nom	Fig. 3-35, (p. 3-59)			
MEASI: IDC,lin 4							037 157
Blocked	0.000	1.200	IDC,nom	Fig. 3-35, (p. 3-59)			
MEASI: IDC,lin 5							037 159
Blocked	0.000	1.200	IDC,nom	Fig. 3-35, (p. 3-59)			
MEASI: IDC,lin 6							037 161
Blocked	0.000	1.200	IDC,nom	Fig. 3-35, (p. 3-59)			
MEASI: IDC,lin 7							037 163
Blocked	0.000	1.200	IDC,nom	Fig. 3-35, (p. 3-59)			
MEASI: IDC,lin 8							037 165
Blocked	0.000	1.200	IDC,nom	Fig. 3-35, (p. 3-59)			

Parameter							Address
Default	**Min**	**Max**	**Unit**			**Logic Diagram**	
MEASI: IDC,lin 9							037 167
Blocked	0.000	1.200	IDC,nom	Fig. 3-35, (p. 3-59)			
MEASI: IDC,lin 10							037 169
Blocked	0.000	1.200	IDC,nom	Fig. 3-35, (p. 3-59)			
MEASI: IDC,lin 11							037 171
Blocked	0.000	1.200	IDC,nom	Fig. 3-35, (p. 3-59)			
MEASI: IDC,lin 12							037 173
Blocked	0.000	1.200	IDC,nom	Fig. 3-35, (p. 3-59)			
MEASI: IDC,lin 13							037 175
Blocked	0.000	1.200	IDC,nom	Fig. 3-35, (p. 3-59)			
MEASI: IDC,lin 14							037 177
Blocked	0.000	1.200	IDC,nom	Fig. 3-35, (p. 3-59)			
MEASI: IDC,lin 15							037 179
Blocked	0.000	1.200	IDC,nom	Fig. 3-35, (p. 3-59)			
MEASI: IDC,lin 16							037 181
Blocked	0.000	1.200	IDC,nom	Fig. 3-35, (p. 3-59)			
MEASI: IDC,lin 17							037 183
Blocked	0.000	1.200	IDC,nom	Fig. 3-35, (p. 3-59)			
MEASI: IDC,lin 18							037 185
Blocked	0.000	1.200	IDC,nom	Fig. 3-35, (p. 3-59)			
MEASI: IDC,lin 19							037 187
Blocked	0.000	1.200	IDC,nom	Fig. 3-35, (p. 3-59)			
MEASI: IDC,lin 20							037 189
1.200	0.000	1.200	IDC,nom	Fig. 3-35, (p. 3-59)			
Setting for the linearized current that will correspond to an input current that has been set accordingly.							
MEASI: Scaled val. IDC,lin1							037 192
0	-32768	32767		Fig. 3-36, (p. 3-60)			
Setting for the scaled value of IDC,lin1.							
MEASI: Scaled val.IDC,lin20							037 193
1200	-32768	32767		Fig. 3-36, (p. 3-60)			
Setting for the scaled value of IDC,lin20.							

Binary and analog output

Parameter						Address
Default	Min	Max	Unit			Logic Diagram
OUTP: Fct. assignm. K 901						150 193
060 000: MAIN: Without function						
OUTP: Fct. assignm. K 902						150 196
060 000: MAIN: Without function						
OUTP: Fct. assignm. K 903						150 199
060 000: MAIN: Without function						
OUTP: Fct. assignm. K 904						150 202
060 000: MAIN: Without function						
OUTP: Fct. assignm. K 905						150 205
060 000: MAIN: Without function						
OUTP: Fct. assignm. K 906						150 208
060 000: MAIN: Without function						
OUTP: Fct. assignm. K 907						150 211
060 000: MAIN: Without function						
OUTP: Fct. assignm. K 908						150 214
060 000: MAIN: Without function						
OUTP: Fct. assignm. K 1001						150 217
060 000: MAIN: Without function						
OUTP: Fct. assignm. K 1002						150 220
060 000: MAIN: Without function						
OUTP: Fct. assignm. K 1003						150 223
060 000: MAIN: Without function						
OUTP: Fct. assignm. K 1004						150 226
060 000: MAIN: Without function						
OUTP: Fct. assignm. K 1005						150 229
060 000: MAIN: Without function						
OUTP: Fct. assignm. K 1006						150 232
060 000: MAIN: Without function						
OUTP: Fct. assignm. K 1007						150 235
060 000: MAIN: Without function						
OUTP: Fct. assignm. K 1008						150 238
060 000: MAIN: Without function						
OUTP: Fct. assignm. K 1201						151 009
060 000: MAIN: Without function						
OUTP: Fct. assignm. K 1202						151 012
060 000: MAIN: Without function						

Parameter						Address
Default	Min	Max	Unit			Logic Diagram
OUTP: Fct. assignm. K 1601						171 002
060 000: MAIN: Without function						
OUTP: Fct. assignm. K 1602						171 006
060 000: MAIN: Without function						
OUTP: Fct. assignm. K 1603						171 010
060 000: MAIN: Without function						
OUTP: Fct. assignm. K 1604						171 014
060 000: MAIN: Without function						
OUTP: Fct. assignm. K 1605						171 018
060 000: MAIN: Without function						
OUTP: Fct. assignm. K 1606						171 022
060 000: MAIN: Without function						
OUTP: Fct. assignm. K 1607						171 026
060 000: MAIN: Without function						
OUTP: Fct. assignm. K 1608						171 030
060 000: MAIN: Without function						
OUTP: Fct. assignm. K 1801						173 002
060 000: MAIN: Without function						
OUTP: Fct. assignm. K 1802						173 006
060 000: MAIN: Without function						
OUTP: Fct. assignm. K 1803						173 010
060 000: MAIN: Without function						
OUTP: Fct. assignm. K 1804						173 014
060 000: MAIN: Without function						
OUTP: Fct. assignm. K 1805						173 018
060 000: MAIN: Without function						
OUTP: Fct. assignm. K 1806						173 022
060 000: MAIN: Without function						
OUTP: Fct. assignm. K 2001						151 201
060 000: MAIN: Without function						
OUTP: Fct. assignm. K 2002						151 204
060 000: MAIN: Without function						
OUTP: Fct. assignm. K 2003						151 207
060 000: MAIN: Without function						
OUTP: Fct. assignm. K 2004						151 210
060 000: MAIN: Without function						
OUTP: Fct. assignm. K 2005						151 213
060 000: MAIN: Without function						

Parameter						Address
Default	Min	Max	Unit			Logic Diagram
OUTP: Fct. assignm. K 2006						151 216
060 000: MAIN: Without function						
OUTP: Fct. assignm. K 2007						151 219
060 000: MAIN: Without function						
OUTP: Fct. assignm. K 2008						151 222
060 000: MAIN: Without function						
Assignment of functions to output relays.						
OUTP: Oper. mode K 901						150 194
1: ES updating						
OUTP: Oper. mode K 902						150 197
1: ES updating						
OUTP: Oper. mode K 903						150 200
1: ES updating						
OUTP: Oper. mode K 904						150 203
1: ES updating						
OUTP: Oper. mode K 905						150 206
1: ES updating						
OUTP: Oper. mode K 906						150 209
1: ES updating						
OUTP: Oper. mode K 907						150 212
1: ES updating						
OUTP: Oper. mode K 908						150 215
1: ES updating						
OUTP: Oper. mode K 1001						150 218
1: ES updating						
OUTP: Oper. mode K 1002						150 221
1: ES updating						
OUTP: Oper. mode K 1003						150 224
1: ES updating						
OUTP: Oper. mode K 1004						150 227
1: ES updating						
OUTP: Oper. mode K 1005						150 230
1: ES updating						
OUTP: Oper. mode K 1006						150 233
1: ES updating						
OUTP: Oper. mode K 1007						150 236
1: ES updating						

Parameter						Address
Default	Min	Max	Unit			Logic Diagram
OUTP: Oper. mode K 1008						150 239
1: ES updating						
OUTP: Oper. mode K 1201						151 010
1: ES updating						
OUTP: Oper. mode K 1202						151 013
1: ES updating						
OUTP: Oper. mode K 1601						171 003
1: ES updating						
OUTP: Oper. mode K 1602						171 007
1: ES updating						
OUTP: Oper. mode K 1603						171 011
1: ES updating						
OUTP: Oper. mode K 1604						171 015
1: ES updating						
OUTP: Oper. mode K 1605						171 019
1: ES updating						
OUTP: Oper. mode K 1606						171 023
1: ES updating						
OUTP: Oper. mode K 1607						171 027
1: ES updating						
OUTP: Oper. mode K 1608						171 031
1: ES updating						
OUTP: Oper. mode K 1801						173 003
1: ES updating						
OUTP: Oper. mode K 1802						173 007
1: ES updating						
OUTP: Oper. mode K 1803						173 011
1: ES updating						
OUTP: Oper. mode K 1804						173 015
1: ES updating						
OUTP: Oper. mode K 1805						173 019
1: ES updating						
OUTP: Oper. mode K 1806						173 023
1: ES updating						
OUTP: Oper. mode K 2001						151 202
1: ES updating						
OUTP: Oper. mode K 2002						151 205
1: ES updating						

Parameter						Address
Default	Min	Max	Unit		Logic Diagram	
OUTP: Oper. mode K 2003						151 208
1: ES updating						
OUTP: Oper. mode K 2004						151 211
1: ES updating						
OUTP: Oper. mode K 2005						151 214
1: ES updating						
OUTP: Oper. mode K 2006						151 217
1: ES updating						
OUTP: Oper. mode K 2007						151 220
1: ES updating						
OUTP: Oper. mode K 2008						151 223
1: ES updating						
Selection of operating mode for output relays.						

Measured data output

Parameter							Address
Default	**Min**	**Max**	**Unit**			**Logic Diagram**	
MEASO: Function group MEASO							056 020
0: Without							
Cancelling function group MEASI or including it in the configuration. If the function group is cancelled from the configuration, then all associated settings and signals are hidden. If the function group is cancelled from the configuration, then all associated settings and signals are hidden.							
MEASO: General enable USER							031 074
0: No							
Disabling or enabling the measured data output function.							
MEASO: Fct. assignm. BCD							053 002
060 000: MAIN: Without function				Fig. 3-43, (p. 3-69)			
Selection of the measured value to be transmitted in BCD form.							
MEASO: Hold time output BCD							010 010
0.10	0.10	10.00	s	Fig. 3-43, (p. 3-69)			
Setting for the transmission time of the selected measured value in BCD form.							
MEASO: Scaled min. val. BCD							037 140
0.000	0.000	1.000					
MEASO: Scaled max. val. BCD							037 141
1.000	0.000	1.000					
MEASO: BCD-Out min. value							037 142
0	0	399					

Parameter							Address
Default	**Min**	**Max**	**Unit**			**Logic Diagram**	
MEASO: BCD-Out max. value							037 143
399	0	399					

The variable Mx is to be issued in BCD form.

For measured values in the range “measured values to be issued” the output value should change linearly with the measured value.

- Range of measured values for the variable Mx: Mx,RL1 ... Mx,RL2
- Range of associated scaled measured values: 0 ... 1
- Range of measured values to be issued: Mx,min ... Mx,max
- Range of scaled measured values to be issued: Mx,scal,min ... Mx,scal,max
- Designation of the set values in the data model: “Scaled min. val. BCD” ... “Scaled max. val. BCD”

with:

Mx,scal,min = (Mx,min - Mx,RL1)/(Mx,RL2 - Mx,RL1)

Mx,scal,max = (Mx,max - Mx,RL1)/(Mx,RL2 - Mx,RL1)

BCD display values for measured values in the range “measured values to be issued”; range: “BCD-Out min. value” ... “BCD-Out max. value”

BBCD display values for measured values ≤ Mx,min; range: “BCD-Out min. value”

BCD display values for measured values ≥ Mx,max; range: “BCD-Out max. value”

MEASO: Fct. assignm. A-1							053 000
060 000: MAIN: Without function				Fig. 3-45, (p. 3-75)			
MEASO: Fct. assignm. A-2							053 001
060 000: MAIN: Without function							

Selection of the measured value to be transmitted in analog form.

MEASO: Hold time output A-1							010 114
0.10	0.10	10.00	s	Fig. 3-45, (p. 3-75)			
MEASO: Hold time output A-2							010 115
0.10	0.10	10.00	s				

Setting for the time delay for output of the selected measured value.

MEASO: Scaled min. val. A-1							037 104
0.000	0.000	1.000		Fig. 3-45, (p. 3-75)			
MEASO: Scaled knee val. A-1							037 105
Blocked	0.000	1.000		Fig. 3-45, (p. 3-75)			
MEASO: Scaled max. val. A-1							037 106
1.000	0.000	1.000		Fig. 3-45, (p. 3-75)			
MEASO: Scaled min. val. A-2							037 110
0.000	0.000	1.000					

Parameter							Address
Default	**Min**	**Max**	**Unit**				**Logic Diagram**
MEASO: Scaled knee val. A-2							037 111
Blocked	0.000	1.000					
MEASO: Scaled max. val. A-2							037 112
1.000	0.000	1.000					

After conversion via a characteristic the selected measured value Ax (x = 1, 2) is to be issued as an output current. For this purpose a range “measured values to be issued” is defined. In this range the characteristic has two linear sections, which are separated by a knee point.

- Range of measured values for the variable Mx: Mx,RL1 ... Mx,RL2
- Range of associated scaled measured values: 0 ... 1
- Range of measured values to be issued: Mx,min ... Mx,max
- Range of scaled measured values to be output: Mx,scal,min ... Mx,scal,max
- Designation of the set values in the data model: „Scaled min. val. Ax“ ... „Scaled max. val. Ax“

with:

Mx,scal,min = (Mx,min - Mx,RL1)/(Mx,RL2 - Mx,RL1)

Mx,scal,max = (Mx,max - Mx,RL1)/(Mx,RL2 - Mx,RL1)

- Designation of value for knee point: Mx,knee
- Designation of scaled knee point value: Mx,scaled,knee
- Designation of this set value in the data model: „Scaled knee val. Ax“

with:

Mx,scaled,knee = (Mx,knee - Mx,RL1)/(Mx,RL2 - Mx,RL1)

MEASO: AnOut min. val. A-1							037 107
0.00	0.00	20.00	mA	Fig. 3-45, (p. 3-75)			
MEASO: AnOut knee point A-1							037 108
Blocked	0.00	20.00	mA	Fig. 3-45, (p. 3-75)			
MEASO: AnOut max. val. A-1							037 109
20.00	0.00	20.00	mA	Fig. 3-45, (p. 3-75)			
MEASO: AnOut min. val. A-2							037 113
0.00	0.00	20.00	mA				
MEASO: AnOut knee point A-2							037 114
Blocked	0.00	20.00	mA				

Parameter							Address
Default	**Min**	**Max**	**Unit**				**Logic Diagram**
MEASO: AnOut max. val. A-2							037 115
20.00	0.00	20.00	mA				
Output current range for measured values in the range “measured values to be issued”; designation in the data model: “An-Out min. val. Ax” ... “An-Out max. val. Ax” Output current to be set for measured values ≤ Mx,min; designation in the data model: “An-Out min. val. Ax” Output current to be set for measured values ≥ Mx,max; designation in the data model: “An-Out max. val. Ax” Output current to be set for measured values = Mx,knee; designation in the data model: “AnOut knee point Ax” with: Mx,min ... Mx,max: measured values to be issued							
MEASO: Output value 1							037 120
0.00	0.00	100.00	%				
MEASO: Output value 2							037 121
0.00	0.00	100.00	%				
MEASO: Output value 3							037 122
0.00	0.00	100.00	%				
Measured values of external devices, which must be scaled to 0 to 100%, can be issued.							

LED indicators

Parameter					Address
Default	Min	Max	Unit		Logic Diagram
LED: Fct.assig. H 1 green					085 184
060 001: MAIN: Healthy					
Display of the operational readiness of the protection device. The function **MAIN: Healthy** is permanently assigned.					
LED: Fct.assig. H 2 yell.					085 001
004 065: MAIN: Blocked/faulty					
Display of the function assigned to LED indicator H 2. The function **MAIN: Blocked/faulty** is permanently assigned.					
LED: Fct.assig. H 3 yell.					085 004
036 070: SFMON: Warning (LED)					
Display of the function assigned to LED indicator H 3. The function **SFMON: Warning (LED)** is permanently assigned.					
LED: Fct.assig. H 4 red					085 007
036 251: MAIN: Gen. trip signal					
LED: Fct.assig. H 4 green					085 057
060 000: MAIN: Without function					
LED: Fct.assig. H 5 red					085 010
060 000: MAIN: Without function					
LED: Fct.assig. H 5 green					085 060
060 000: MAIN: Without function					
LED: Fct.assig. H 6 red					085 013
060 000: MAIN: Without function					
LED: Fct.assig. H 6 green					085 063
060 000: MAIN: Without function					
LED: Fct.assig. H 7 red					085 016
060 000: MAIN: Without function					
LED: Fct.assig. H 7 green					085 066
060 000: MAIN: Without function					
LED: Fct.assig. H 8 red					085 019
060 000: MAIN: Without function					
LED: Fct.assig. H 8 green					085 069
060 000: MAIN: Without function					
LED: Fct.assig. H 9 red					085 022
060 000: MAIN: Without function					
LED: Fct.assig. H 9 green					085 072
060 000: MAIN: Without function					

Parameter						Address
Default	Min	Max	Unit		Logic Diagram	
LED: Fct.assig. H10 red						085 025
060 000: MAIN: Without function						
LED: Fct.assig. H10 green						085 075
060 000: MAIN: Without function						
LED: Fct.assig. H11 red						085 028
060 000: MAIN: Without function						
LED: Fct.assig. H11 green						085 078
060 000: MAIN: Without function						
LED: Fct.assig. H12 red						085 031
060 000: MAIN: Without function						
LED: Fct.assig. H12 green						085 081
060 000: MAIN: Without function						
LED: Fct.assig. H13 red						085 034
060 000: MAIN: Without function						
LED: Fct.assig. H13 green						085 084
060 000: MAIN: Without function						
LED: Fct.assig. H14 red						085 037
060 000: MAIN: Without function						
LED: Fct.assig. H14 green						085 087
060 000: MAIN: Without function						
LED: Fct.assig. H15 red						085 040
060 000: MAIN: Without function						
LED: Fct.assig. H15 green						085 090
060 000: MAIN: Without function						
LED: Fct.assig. H16 red						085 043
060 000: MAIN: Without function						
LED: Fct.assig. H16 green						085 093
060 000: MAIN: Without function						
LED: Fct.assig. H18 red						085 131
060 000: MAIN: Without function						
LED: Fct.assig. H18 green						085 161
060 000: MAIN: Without function						
LED: Fct.assig. H19 red						085 134
060 000: MAIN: Without function						
LED: Fct.assig. H19 green						085 164
060 000: MAIN: Without function						
LED: Fct.assig. H20 red						085 137
060 000: MAIN: Without function						

Parameter					Address
Default	Min	Max	Unit		Logic Diagram
LED: Fct.assig. H20 green					085 167
060 000: MAIN: Without function					
LED: Fct.assig. H21 red					085 140
060 000: MAIN: Without function					
LED: Fct.assig. H21 green					085 170
060 000: MAIN: Without function					
LED: Fct.assig. H22 red					085 143
060 000: MAIN: Without function					
LED: Fct.assig. H22 green					085 173
060 000: MAIN: Without function					
LED: Fct.assig. H23 red					085 146
060 000: MAIN: Without function					
LED: Fct.assig. H23 green					085 177
060 000: MAIN: Without function					
Assignment of functions to LED indicators.					
LED: Fct.assig. H17 red					085 185
080 111: LOC: Edit mode					
Display of the function assigned to LED indicator H 17. The function **LOC: Edit mode** is permanently assigned.					
LED: Operating mode H 1					085 182
1: ES updating					
The operating mode *ES updating* is permanently assigned.					
LED: Operating mode H 2					085 002
1: ES updating					
The operating mode *ES updating* is permanently assigned.					
LED: Operating mode H 3					085 005
1: ES updating					
The *ES updating* operating mode is permanently assigned.					
LED: Operating mode H 4					085 008
3: ES reset (fault)					
LED: Operating mode H 5					085 011
1: ES updating					
LED: Operating mode H 6					085 014
1: ES updating					
LED: Operating mode H 7					085 017
1: ES updating					

Parameter						Address
Default	Min	Max	Unit		Logic Diagram	
LED: Operating mode H 8						085 020
1: ES updating						
LED: Operating mode H 9						085 023
1: ES updating						
LED: Operating mode H 10						085 026
1: ES updating						
LED: Operating mode H 11						085 029
1: ES updating						
LED: Operating mode H 12						085 032
1: ES updating						
LED: Operating mode H 13						085 035
1: ES updating						
LED: Operating mode H 14						085 038
1: ES updating						
LED: Operating mode H 15						085 041
1: ES updating						
LED: Operating mode H 16						085 044
1: ES updating						
LED: Operating mode H 18						085 132
1: ES updating						
LED: Operating mode H 19						085 135
1: ES updating						
LED: Operating mode H 20						085 138
1: ES updating						
LED: Operating mode H 21						085 141
1: ES updating						
LED: Operating mode H 22						085 144
1: ES updating						
LED: Operating mode H 23						085 147
1: ES updating						
Selection of operating mode for LED indicators.						
LED: Operating mode H 17						085 183
1: ES updating						
The operating mode *ES updating* is permanently assigned.						

Main function

Parameter							Address
Default	**Min**	**Max**	**Unit**				**Logic Diagram**
MAIN: Chann.assign.COMM1/2							003 169
1: COMM1->chann.1,(2-2)				Fig. 3-80, (p. 3-115)			
Assignment of communication interfaces to physical communication channels.							
MAIN: Type of bay							220 000
1	1	9999		Fig. 3-195, (p. 3-242)			
Configuration of a bay type.							
MAIN: Prim.Source TimeSync							103 210
0: COMM1/IEC							
Selection of the primary source for date and time synchronization. Available are *COMM1/IEC*, *COMM2/PC*, *IRIG-B* or a binary input for minute signal pulses.							
MAIN: BackupSourceTimeSync							103 211
1: COMM2/PC							
Selection of the backup source for date and time synchronization. Available are *COMM1/IEC*, *COMM2/PC*, *IRIG-B* or a binary input for minute signal pulses. The backup source is used when there is no synchronization generated by the primary source after **MAIN: Time sync. time-out** has elapsed.							
MAIN: Time sync. time-out							103 212
Blocked	1	60	min				
Time-out setting for the time synchronization generated by the primary source.							
MAIN: Auto-assignment I/O							221 065
1: Yes				Fig. 3-195, (p. 3-242)			
Disabling or enabling of automatic assignment of binary inputs and outputs to the set bay type.							

Fault recording

Parameter					Address
Default	Min	Max	Unit		Logic Diagram
FT_RC: Rec. analog chann. 1					035 160
65: Current IA,a					
FT_RC: Rec. analog chann. 2					035 161
66: Current IB,a					
FT_RC: Rec. analog chann. 3					035 162
67: Current IC,a					
FT_RC: Rec. analog chann. 4					035 163
160: Current IY,a					
FT_RC: Rec. analog chann. 5					035 164
69: Current IA,b					
FT_RC: Rec. analog chann. 6					035 165
70: Current IB,b					
FT_RC: Rec. analog chann. 7					035 166
71: Current IC,b					
FT_RC: Rec. analog chann. 8					035 167
161: Current IY,b					
FT_RC: Rec. analog chann. 9					035 168
232: Voltage V					
FT_RC: Rec. analog chann.10					035 169
73: Current IA,c					
FT_RC: Rec. analog chann.11					035 170
74: Current IB,c					
FT_RC: Rec. analog chann.12					035 171
75: Current IC,c					
FT_RC: Rec. analog chann.13					035 172
162: Current IY,c					
The user specifies the channel on which each physical variable is recorded.					

Differential protection

Parameter					Address
Default	Min	Max	Unit		Logic Diagram
DIFF: Function group DIFF					056 027
0: Without					
Cancelling function group DIFF or including it in the configuration. If the function group is cancelled from the configuration, then all associated settings and signals are hidden.					

Ground differential protection

Parameter					Address
Default	Min	Max	Unit		Logic Diagram
REF_1: Function group REF_1					056 037
0: Without					
REF_2: Function group REF_2					056 038
0: Without					
REF_3: Function group REF_3					056 039
0: Without					
Cancelling function groups REF_x or including them in the configuration. If a function group is cancelled, then all associated settings and signals are hidden, with the exception of this setting.					

Definite-time overcurrent protection

Parameter					Address
Default	Min	Max	Unit		Logic Diagram
DTOC1: Function group DTOC1					056 031
0: Without					
DTOC2: Function group DTOC2					056 032
0: Without					
DTOC3: Function group DTOC3					056 053
0: Without					
Cancelling function groups DTOCx or including them in the configuration. If a function group is cancelled, then all associated settings and signals are hidden, with the exception of this setting.					

Inverse-time overcurrent protection

Parameter					Address
Default	Min	Max	Unit		Logic Diagram
IDMT1: Function group IDMT1					056 051
0: Without					
IDMT2: Function group IDMT2					056 061
0: Without					
IDMT3: Function group IDMT3					056 071
0: Without					
Cancelling function groups IDMTx or including them in the configuration. If a function group is cancelled, then all associated settings and signals are hidden, with the exception of this setting.					

Thermal overload protection

Parameter					Address
Default	Min	Max	Unit		Logic Diagram
THRM1: Function group THRM1					056 054
0: Without					
THRM2: Function group THRM2					056 055
0: Without					

Cancelling function groups THRMx or including them in the configuration. If the function group is cancelled from the configuration, then all associated settings and signals are hidden.

Time-voltage protection

Parameter					Address
Default	Min	Max	Unit		Logic Diagram
V<>: Function group V<>					056 010
0: Without					

Cancelling function group V<> or including it in the configuration. If the function group is cancelled from the configuration, then all associated settings and signals are hidden, with the exception of this setting.

Over-/ underfrequency protection

Parameter					Address
Default	Min	Max	Unit		Logic Diagram
f<>: Function group f<>					056 033
0: Without					

Canceling function group f<> or including it in the configuration. If the function group is cancelled from the configuration, then all associated settings and signals are hidden, with the exception of this setting.

Overfluxing protection

Parameter					Address
Default	Min	Max	Unit		Logic Diagram
V/f: Function group V/f					056 056
0: Without					

Cancelling function group V/f or including it in the configuration. If the function group is cancelled from the configuration, then all associated settings and signals are hidden, with the exception of this setting.

Current transformer supervision

Parameter					Address
Default	Min	Max	Unit		Logic Diagram
CTS: Function group CTS					056 077
0: Without					
Cancelling function group CTS or including it in the configuration. If the function group is cancelled from the configuration, then all associated settings and signals are hidden.					

Measuring-circuit monitoring

Parameter					Address
Default	Min	Max	Unit		Logic Diagram
MCM_1: Function group MCM_1					056 073
0: Without					
MCM_2: Function group MCM_2					056 074
0: Without					
MCM_3: Function group MCM_3					056 075
0: Without					
Cancelling function groups MCM_x or including them in the configuration. If a function group is cancelled, then all associated settings and signals are hidden, with the exception of this setting.					

Circuit breaker failure protection

Parameter					Address
Default	Min	Max	Unit		Logic Diagram
CBF_1: Function group CBF_1					056 007
0: Without					
CBF_2: Function group CBF_2					056 082
0: Without					
CBF_3: Function group CBF_3					056 083
0: Without					
Cancelling function group CBF_x or including it in the configuration. If the function group is cancelled from the configuration, then all associated settings and signals are hidden, with the exception of this setting.					

Limit value monitoring

Parameter					Address
Default	Min	Max	Unit		Logic Diagram
LIMIT: Function group LIMIT					056 025
0: Without					

Cancelling function group LIMIT or including it in the configuration. If the function group is cancelled from the configuration, then all associated settings and signals are hidden, with the exception of this setting.

Limit value monitoring

Parameter					Address
Default	Min	Max	Unit		Logic Diagram
LIM_1: Function group LIM_1					056 042
0: Without					
LIM_2: Function group LIM_2					056 043
0: Without					
LIM_3: Function group LIM_3					056 050
0: Without					

Cancelling function groups LIM_x or including them in the configuration. If a function group is cancelled, then all associated settings and signals are hidden, with the exception of this setting.

Transformer monitoring

Parameter					Address
Default	Min	Max	Unit		Logic Diagram
TRMON: Function group TRMON					056 095
0: Without					

Cancelling function group TRMON or including it in the configuration. If the function group is cancelled from the configuration, then all associated settings and signals are hidden.

Programmable Logic

Parameter					Address
Default	Min	Max	Unit		Logic Diagram
LOG_2: Function group LOG_2					056 089
0: Without					

Cancelling function group LOG_2 (“Logic 2”) or including it in the configuration. If the function group is cancelled from the configuration, then all associated settings and signals are hidden.

Programmable Logic

Parameter						Address
Default	Min	Max	Unit			Logic Diagram
LOGIC: Function group LOGIC						056 017
0: Without						
Cancelling function group LOGIC or including it in the configuration. If the function group is cancelled from the configuration, then all associated settings and signals are hidden.						

External device

Parameter							Address
Default	Min	Max	Unit			Logic	Diagram
DEV01: Function group DEV01							210 047
0: Without							
DEV02: Function group DEV02							210 097
0: Without							
DEV03: Function group DEV03							210 147
0: Without							
Cancelling function groups DEV01 to DEV03 or including them in the configuration. If any function group is cancelled from the configuration, then all associated settings and signals are hidden.							
DEV01: Funct. type, signal							210 034
242	1	254					
DEV02: Funct. type, signal							210 084
242	1	254					
DEV03: Funct. type, signal							210 134
242	1	254					
Setting the function type of the signal. **Note:** If the IEC 870-5-101 communication protocol has been set, then the 'low address' of the information object will be defined by this setting. If the ILS-C protocol has been set, then this setting will correspond to DN2.							
DEV01: Inform. No., signal							210 035
1	0	254					
DEV02: Inform. No., signal							210 085
3	0	254					
DEV03: Inform. No., signal							210 135
5	0	254					
Setting the information number of the signal. **Note:** If the IEC 870-5-101 communication protocol has been set, then the 'high address' of the information object will be defined by this setting. If the ILS-C protocol has been set, then this setting will correspond to DN3.							
DEV01: Funct. type, command							210 032
242	1	254					
DEV02: Funct. type, command							210 082
242	1	254					
DEV03: Funct. type, command							210 132
242	1	254					
Setting for the function type of the command. **Note:** If the IEC 870-5-101 communication protocol has been set, then the “low address” of the information object will be defined by this setting. If the ILS-C protocol has been set, then this setting will correspond to DN2.							

Parameter							Address
Default	**Min**	**Max**	**Unit**				**Logic Diagram**
DEV01: Inform. No., command							210 033
65	0	254					
DEV02: Inform. No., command							210 083
67	0	254					
DEV03: Inform. No., command							210 133
69	0	254					

Setting the information number of the command.

Note: If the IEC 870-5-101 communication protocol has been set, then the 'high address' of the information object will be defined by this setting. If the ILS-C protocol has been set, then this setting will correspond to DN3.

Single-pole signals

Parameter						Address
Default	Min	Max	Unit		Logic Diagram	
SIG_1: Function group SIG_1						249 250
1: With						
Cancelling function group SIG_1 or including it in the configuration. If the function group is cancelled from the configuration, then all associated settings and signals are hidden, with the exception of this setting.						
SIG_1: Signal S001 config.						226 007
0: No				Fig. 3-210, (p. 3-267)		
SIG_1: Signal S002 config.						226 015
0: No						
SIG_1: Signal S003 config.						226 023
0: No						
SIG_1: Signal S004 config.						226 031
0: No						
SIG_1: Signal S005 config.						226 039
0: No						
SIG_1: Signal S006 config.						226 047
0: No						
SIG_1: Signal S007 config.						226 055
0: No						
SIG_1: Signal S008 config.						226 063
0: No						
SIG_1: Signal S009 config.						226 071
0: No						
SIG_1: Signal S010 config.						226 079
0: No						
SIG_1: Signal S011 config.						226 087
0: No						
SIG_1: Signal S012 config.						226 095
0: No						
Cancelling the signal or including it in the configuration. If a signal is cancelled, then all associated settings and signals are hidden.						
SIG_1: SIG_DC3 config.						233 007
0: No						
Cancelling the signal SIG_DC3 or including it in the configuration. This signal is used to terminate a direct motor control command in combination with the single-pole command **CMD_1: CMD_DC3**. If this signal is cancelled, then all associated settings are hidden.						

Single-pole commands

Parameter					Address
Default	Min	Max	Unit		Logic Diagram
CMD_1: Function group CMD_1					249 252
1: With					
Cancelling function group CMD_1 or including it in the configuration. If the function group is cancelled from the configuration, then all associated settings and signals are hidden, with the exception of this setting.					
CMD_1: Command C001 config.					200 004
0: No				Fig. 3-209, (p. 3-265)	
CMD_1: Command C002 config.					200 009
0: No					
CMD_1: Command C003 config.					200 014
0: No					
CMD_1: Command C004 config.					200 019
0: No					
CMD_1: Command C005 config.					200 024
0: No					
CMD_1: Command C006 config.					200 029
0: No					
CMD_1: Command C007 config.					200 034
0: No					
CMD_1: Command C008 config.					200 039
0: No					
CMD_1: Command C009 config.					200 044
0: No					
CMD_1: Command C010 config.					200 049
0: No					
CMD_1: Command C011 config.					200 054
0: No					
CMD_1: Command C012 config.					200 059
0: No					
Cancelling the command or including it in the configuration. If the command is cancelled, then all associated settings and signals are hidden, with the exception of this setting.					

Parameter					Address
Default	Min	Max	Unit		Logic Diagram
CMD_1: CMD_DC3 config.					202 014
0: No					

Cancelling command CMD_DC3 or including it in the configuration. This command is used for direct motor control, the operation is delayed by the set value **MAIN: DC op. delay t1**, and it is terminated with the signal **SIG_1: Logic SIG_DC3** or – if **MAIN: ext.cmd.term. w/o PI** = *No* – with positive indication of the final switchgear position; in any case this reset is delayed by the set value **MAIN: DC2/3 release delay**.

If the command is cancelled, then all associated settings and signals are hidden, with the exception of this setting.

Interlocking logic

Parameter					Address
Default	Min	Max	Unit		Logic Diagram
ILOCK: Function group ILOCK					250 102
0: Without					

Cancelling function group ILOCK or including it in the configuration. If the function group is cancelled from the configuration, then all associated settings and signals are hidden, with the exception of this setting.

Binary counts

Parameter					Address
Default	Min	Max	Unit		Logic Diagram
COUNT: Function group COUNT					217 047
0: Without					

Cancelling function group COUNT or including it in the configuration. If the function group is cancelled from the configuration, then all associated settings and signals are hidden, with the exception of this setting.

7.1.3 Function Parameters

7.1.3.1 Global

PC link

Parameter							Address
Default	Min	Max	Unit			Logic Diagram	
PC: Command blocking							003 182
0: No				Fig. 3-9, (p. 3-14)			
When command blocking is activated, commands are rejected at the PC interface.							
PC: Sig./meas.val.block.							003 086
0: No				Fig. 3-9, (p. 3-14)			
When signal and measured value blocking is activated, no signals or measured data are transmitted through the PC interface.							

“Logical” communication interface 1

Parameter							Address
Default	Min	Max	Unit			Logic Diagram	
COMM1: Command block. USER							003 172
1: Yes				Fig. 3-10, (p. 3-16)			
When command blocking is activated, commands are rejected at communication interface 1.							
COMM1: Sig./meas.block.USER							003 076
0: No				Fig. 3-11, (p. 3-17) Fig. 3-12, (p. 3-18) Fig. 3-13, (p. 3-19)			
When signal and measured value blocking user is activated, no signals or measured data are transmitted through communication interface COMM1.							

"Logical" communication interface 2

Parameter					Address
Default	Min	Max	Unit		Logic Diagram
COMM2: Command block. USER					103 172
0: No				Fig. 3-18, (p. 3-24)	
When command blocking is activated, commands are rejected at communication interface 2.					
COMM2: Sig./meas.block.USER					103 076
0: No				Fig. 3-18, (p. 3-24)	
When signal and measured value blocking user is activated, no signals or measured data are transmitted through communication interface COMM2.					

IEC 61850 Communication

Parameter					Address
Default	Min	Max	Unit		Logic Diagram
IEC: Command block. USER					104 085
1: Yes					
When command blocking is activated, commands are rejected at IEC communication interface.					
IEC: Ctrl blocked user					221 125
0: No				Fig. 3-23, (p. 3-44)	
When control blocking is activated, controls are rejected at IEC communication, i.e no output data (digital by relays) will be issued to the process.					
IEC: Sig./meas.block.USER					104 088
0: No					
When signal and measured value blocking user is activated, no signals or measured data are transmitted through IEC communication interface.					

Binary and analog output

Parameter					Address
Default	Min	Max	Unit		Logic Diagram
OUTP: Outp.rel.block USER					021 014
0: No				Fig. 3-38, (p. 3-63)	
When this blocking is activated, all output relays are blocked.					

Main function

Parameter							Address
Default	**Min**	**Max**	**Unit**				**Logic Diagram**
MAIN: Device on-line							003 030
0: No (= off)				Fig. 3-63, (p. 3-101)			
Switching the device off-line or on-line. Some parameters can only be changed when protection is disabled.							
MAIN: Test mode USER							003 012
0: No				Fig. 3-81, (p. 3-116)			
When the test mode user is activated, signals or measured data for PC and communication interfaces are labeled 'test mode'.							
MAIN: Nominal frequ. fnom							010 030
50: 50 Hz							
Setting for the nominal frequency of the protected system.							
MAIN: Phase sequence							010 049
1: A - B - C							
Setting the phase sequence A-B-C or A-C-B. (Alternative terminology: Setting for the rotary field's direction, either clockwise or anticlockwise.)							
MAIN: Time tag							221 098
1: 1stEdge,OpMem sorted							
For bay control function signals detected via binary signal inputs and conditioned with debouncing it is now possible to select whether the time tag for the signal is to be issued after debouncing or when the first pulse edge is detected. Furthermore it is defined whether entries in the operating data memory are made in chronological order or not.							
MAIN: Inom C.T.prim.,end a							019 020
200	1	50000	A	Fig. 3-55, (p. 3-92)			
MAIN: Inom C.T.prim.,end b							019 021
200	1	50000	A				
MAIN: Inom C.T.prim.,end c							019 022
200	1	50000	A				
Setting for the primary nominal current of the main current transformer (phase currents) of end a, b or c.							
MAIN: Inom C.T.Yprim,end a							019 027
200	1	50000	A				
MAIN: Inom C.T.Yprim,end b							019 028
200	1	50000	A				

Parameter							Address
Default	**Min**	**Max**	**Unit**				**Logic Diagram**
MAIN: Inom C.T.Yprim,end c							019 029
200	1	50000	A				
Setting for the primary nominal current of the main current transformer at the neutral-point-to-ground connection.							
MAIN: Vnom V.T. prim.							010 002
100.0	0.1	1500.0	kV	Fig. 3-58, (p. 3-96)			
Setting for the primary nominal voltage of the system transformer for measurement of phase-to-ground and phase-to-phase voltages.							
MAIN: Inom device, end a							010 024
1.0: 1.0 A				Fig. 3-48, (p. 3-81) Fig. 3-49, (p. 3-82)			
MAIN: Inom device, end b							010 025
1.0: 1.0 A				Fig. 3-49, (p. 3-82)			
MAIN: Inom device, end c							010 029
1.0: 1.0 A				Fig. 3-49, (p. 3-82)			
Setting for the nominal current of the device for the measurement of the phase currents of ends a, b or c. This also corresponds to the nominal device current.							
MAIN: IY,nom device, end a							010 142
1.0: 1.0 A				Fig. 3-49, (p. 3-82)			
MAIN: IY,nom device, end b							010 143
1.0: 1.0 A				Fig. 3-49, (p. 3-82)			
MAIN: IY,nom device, end c							010 144
1.0: 1.0 A				Fig. 3-49, (p. 3-82)			
MAIN: Vnom V.T. sec.							010 009
100	50	130	V	Fig. 3-48, (p. 3-81) Fig. 3-58, (p. 3-96)			
Setting for the secondary nominal voltage of the system transformer for voltage measurement.							
MAIN: Conn.meas.circ. IP,a							010 140
1: Standard				Fig. 3-48, (p. 3-81) Fig. 3-49, (p. 3-82)			
MAIN: Conn.meas.circ. IP,b							010 150
1: Standard				Fig. 3-49, (p. 3-82)			

Parameter					Address
Default	**Min**	**Max**	**Unit**		**Logic Diagram**
MAIN: Conn.meas.circ. IP,c					010 160
1: Standard				Fig. 3-49, (p. 3-82)	
The vectorial sum of the phase currents of end a to c is governed by the connection of the measuring circuits. If the connection is as shown in Chapter “Installation and Connection”, then the setting must be *Standard*. If the connection direction is reversed then the setting must be *Opposite*. Instead of accounting for connection reversal applied to one end in the settings for **DIFF: Vec.gr. ends a-b PSx** and **DIFF: Vec.gr. ends a-c PSx**, it is possible to account for it in the settings for connection of the measuring circuits.					
MAIN: Conn.meas.circ. IY,a					010 141
1: Standard				Fig. 3-49, (p. 3-82)	
MAIN: Conn.meas.circ. IY,b					010 151
1: Standard				Fig. 3-49, (p. 3-82)	
MAIN: Conn.meas.circ. IY,c					010 161
1: Standard				Fig. 3-49, (p. 3-82)	
If the connection is as shown in Chapter “Installation and Connection”, then the setting must be *Standard*. If the connection direction is reversed then the setting must be *Opposite*.					
MAIN: Meas. value rel. IP					011 030
0.00	0.00	0.20	Inom	Fig. 3-55, (p. 3-92) Fig. 3-57, (p. 3-94)	
Setting for the minimum current that must be exceeded so that measured operating values of the phase currents and, if applicable, derived currents are displayed.					
MAIN: Meas.value rel. Ineg					011 048
0.000	0.000	0.200	Inom		
MAIN: Meas.value rel. Ipos					011 058
0.000	0.000	0.200	Inom		
Setting for a minimum current that must be exceeded in order for the P633 to display the negative-sequence (positive-sequence) current as measured operating data.					
MAIN: Meas. value rel. IN					011 031
0.000	0.000	0.200	Inom	Fig. 3-56, (p. 3-93) Fig. 3-57, (p. 3-94)	
Setting for the minimum current that must be exceeded so that the measured operating value of the residual current is displayed.					

Parameter							Address
Default	**Min**	**Max**	**Unit**			**Logic Diagram**	
MAIN: Meas. value rel. IY							011 036
0.000	0.000	0.200	IN,nom	Fig. 3-56, (p. 3-93)			
Setting for the minimum current that must be exceeded in order for the measured operating value of the current in the neutral-point-to-ground connection to be displayed.							
MAIN: Meas. value rel. V							011 032
0.00	0.00	0.20	Vnom	Fig. 3-58, (p. 3-96)			
Setting for the minimum voltage that must be exceeded in order for the measured operating values of the voltage to be displayed.							
MAIN: Settl. t. IP,max,del							010 113
15.0	0.1	60.0	min	Fig. 3-54, (p. 3-91) Fig. 3-55, (p. 3-92)			
Setting for the time after which the delayed maximum current display shall reach 95% of the maximum current $I_{P,max}$.							
MAIN: Fct.assign. reset 1							005 248
060 000: MAIN: Without function				Fig. 3-79, (p. 3-114)			
Assigning specific memories and counters which are to be reset jointly if **MAIN: Group reset 1 USER** is enabled.							
MAIN: Fct.assign. reset 2							005 249
060 000: MAIN: Without function				Fig. 3-79, (p. 3-114)			
Assigning specific memories and counters which are to be reset jointly if **MAIN: Group reset 2 USER** is enabled.							
MAIN: Fct.assign. block. 1							021 021
060 000: MAIN: Without function				Fig. 3-66, (p. 3-104)			
Assignment of functions that will be blocked simultaneously when blocking input 1 (**MAIN: Blocking 1 EXT**) is activated.							
MAIN: Fct.assign. block. 2							021 022
060 000: MAIN: Without function				Fig. 3-66, (p. 3-104)			
Assignment of functions that will be blocked simultaneously when blocking input 2 (**MAIN: Blocking 2 EXT**) is activated.							
MAIN: Fct.assign. block. 3							021 048
060 000: MAIN: Without function				Fig. 3-66, (p. 3-104)			
Assignment of functions to be blocked together if blocking input 3 (**MAIN: Blocking 3 EXT**) is activated.							
MAIN: Fct.assign. block. 4							021 049
060 000: MAIN: Without function				Fig. 3-66, (p. 3-104)			
Assignment of functions to be blocked together if blocking input 4 (**MAIN: Blocking 4 EXT**) is activated.							

Parameter							Address
Default	**Min**	**Max**	**Unit**			**Logic Diagram**	
MAIN: Trip cmd.block. USER							021 012
0: No				Fig. 3-74, (p. 3-110)			
Blocking the trip commands from the local control panel.							
MAIN: Fct.assig.trip cmd.1							021 001
060 000: MAIN: Without function				Fig. 3-74, (p. 3-110)			
Assignment of signals that trigger trip command 1.							
MAIN: Fct.assig.trip cmd.2							021 002
060 000: MAIN: Without function							
Assignment of the signals that trigger trip command 2.							
MAIN: Fct.assig.trip cmd.3							021 046
060 000: MAIN: Without function							
Assignment of signals that trigger trip command 3.							
MAIN: Fct.assig.trip cmd.4							021 047
060 000: MAIN: Without function							
Assignment of signals that trigger trip command 4.							
MAIN: Min.dur. trip cmd. 1							021 003
0.25	0.10	10.00	s	Fig. 3-74, (p. 3-110) Fig. 5-12, (p. 5-20)			
Setting for the minimum duration of trip command 1.							
MAIN: Min.dur. trip cmd. 2							021 004
0.25	0.10	10.00	s				
Setting for the minimum duration of trip command 2.							
MAIN: Min.dur. trip cmd. 3							021 032
0.25	0.10	10.00	s				
Setting for the minimum duration of trip command 3.							
MAIN: Min.dur. trip cmd. 4							021 033
0.25	0.10	10.00	s				
Setting for the minimum duration of trip command 4.							
MAIN: Latching trip cmd. 1							021 023
0: No				Fig. 3-74, (p. 3-110)			
Specification as to whether trip command 1 should latch.							
MAIN: Latching trip cmd. 2							021 024
0: No							
Specification as to whether trip command 2 should latch.							

Parameter						Address
Default	**Min**	**Max**	**Unit**		**Logic Diagram**	
MAIN: Latching trip cmd. 3						021 025
0: No						
Specification as to whether trip command 3 should latch.						
MAIN: Latching trip cmd. 4						021 026
0: No						
Specification as to whether trip command 4 should latch.						
MAIN: Fct. assign. fault						021 031
060 000: MAIN: Without function				Fig. 3-67, (p. 3-105)		
Selection of the signals to be signaled as Blocked/Faulty in addition to the messages that always result in the message Blocked/Faulty.						
MAIN: Sig. asg. CB1 open						021 017
061 000: MAIN: Without function				Fig. 3-69, (p. 3-106)		
MAIN: Sig. asg. CB2 open						021 061
061 000: MAIN: Without function						
MAIN: Sig. asg. CB3 open						021 063
061 000: MAIN: Without function						
Definition of the binary signal used by the P633 to evaluate the “CB open” position signal.						
MAIN: Sig. asg. CB1 closed						021 020
061 000: MAIN: Without function				Fig. 3-68, (p. 3-106)		
MAIN: Sig. asg. CB2 closed						021 060
061 000: MAIN: Without function						
MAIN: Sig. asg. CB3 closed						021 062
061 000: MAIN: Without function						
Definition of the binary signal used by the P633 to evaluate the “CB closed” position signal.						
MAIN: Debounce time gr. 1						221 200
0.02	0.00	2.54	s	Fig. 3-211, (p. 3-268)		
MAIN: Debounce time gr. 2						221 203
0.02	0.00	2.54	s			
MAIN: Debounce time gr. 3						221 206
0.02	0.00	2.54	s			
Setting for the debouncing time.						
MAIN: Chatt.mon. time gr.1						221 201
0.0	0.0	25.4	s	Fig. 3-211, (p. 3-268)		
MAIN: Chatt.mon. time gr.2						221 204
0.0	0.0	25.4	s			

Parameter							Address
Default	**Min**	**Max**	**Unit**				**Logic Diagram**
MAIN: Chatt.mon. time gr.3							221 207
0.0	0.0	25.4	s				
Setting for the chatter monitoring time.							
MAIN: Change of state gr.1							221 202
0	0	254		Fig. 3-211, (p. 3-268)			
MAIN: Change of state gr.2							221 205
0	0	254					
MAIN: Change of state gr.3							221 208
0	0	254					
Setting the number of signal changes allowed during the chatter monitoring time before chatter suppression operates.							
MAIN: Cmd. dur.long cmd.							221 230
20	1	254	s				
Setting for the command duration for a long command.							
MAIN: Cmd. dur. short cmd.							221 231
1	1	254	s				
Setting for the command duration for a short command.							
MAIN: Oper. mode CB Trip							221 080
1: ALSTOM D							
Definition of the operating mode of the CB trip.							
MAIN: Inp.asg. ctrl.enabl.							221 057
060 000: MAIN: Without function				Fig. 3-196, (p. 3-244)			
Definition of the binary signal used to issue a general command output enable.							
MAIN: Inp.asg.interl.deact							221 007
060 000: MAIN: Without function				Fig. 3-196, (p. 3-244)			
Definition of the binary signal used to disable interlocking of control commands for switchgear.							
MAIN: Inp.asg. L/R key sw.							221 008
060 000: MAIN: Without function							
Definition of the binary signal used to switch from remote control to local control.							
MAIN: Inp.assign. tripping							221 010
060 000: MAIN: Without function							
Definition of the binary signal used to signal the tripping of an external protection device. This signal is used to form the CB trip signal.							

Parameter						Address
Default	**Min**	**Max**	**Unit**		**Logic Diagram**	
MAIN: Electrical control						221 061
1: Remote						
This setting determines whether the binary inputs, that are configured to control switchgear, will be active with remote control or local control.						
MAIN: Delay Man.Op.Superv.						221 079
3	0	255	s			
After the delay time period, to be set in this window, has elapsed (with the signal “Sw. dev. interm. pos.” already present and the status signal continuously absent), the actual switchgear status signal, as obtained from the respective binary inputs, will be issued. (See also “Processing status signals from manually operated switchgear”.)						
MAIN: W. ext. cmd. termin.						221 063
0: No						
This setting determines if bay types, defined for direct motor control, can be used together with external termination contacts to directly influence the control process of motor driven switchgear.						
MAIN: Prot.trip>CB tripped						221 012
0: Without function						
Selection of the protection function trip command that will be used to form the CB trip signal.						
MAIN: Inp. asg. CB trip						221 013
060 000: MAIN: Without function						
Definition of the binary signal used by the P633 to signal the “CB open” position signal.						
MAIN: Inp.asg.CB tr.en.ext						221 050
060 000: MAIN: Without function						
Definition of the binary signal used to enable the CB trip signal of an external device.						
MAIN: Inp.asg. CB trip ext						221 024
060 000: MAIN: Without function						
Definition of the binary signal used to carry the CB trip signal of an external device.						
MAIN: Inp.asg. mult.sig. 1						221 051
060 000: MAIN: Without function					Fig. 3-70, (p. 3-107)	
MAIN: Inp.asg. mult.sig. 2						221 052
060 000: MAIN: Without function					Fig. 3-70, (p. 3-107)	
Definition of the function that will be interpreted as a multiple signal (group signal).						

Parameter							Address
Default	**Min**	**Max**	**Unit**				**Logic Diagram**
MAIN: Fct.asg. grp.sig. 01							019 184
060 000: MAIN: Without function							
MAIN: Fct.asg. grp.sig. 02							019 185
060 000: MAIN: Without function							
MAIN: Fct.asg. grp.sig. 03							019 186
060 000: MAIN: Without function							
MAIN: Fct.asg. grp.sig. 04							019 187
060 000: MAIN: Without function							
MAIN: Fct.asg. grp.sig. 05							019 188
060 000: MAIN: Without function							
MAIN: Fct.asg. grp.sig. 06							019 189
060 000: MAIN: Without function							
MAIN: Fct.asg. grp.sig. 07							019 190
060 000: MAIN: Without function							
MAIN: Fct.asg. grp.sig. 08							019 191
060 000: MAIN: Without function							
Selection up to 32 internal signals to be grouped using Boolean operators NOT, AND, OR.							

Parameter subset selection

Parameter							Address
Default	**Min**	**Max**	**Unit**				**Logic Diagram**
PSS: Control via USER							003 100
0: No				Fig. 3-82, (p. 3-118)			
If parameter subset selection is to be handled from the integrated local control panel rather than via binary signal inputs, choose the setting *Yes*.							
PSS: Param.subs.sel. USER							003 060
1: Parameter subset 1				Fig. 3-82, (p. 3-118)			
Selection of the parameter subset from the local control panel.							
PSS: Keep time							003 063
Blocked	0.000	65.000	s	Fig. 3-82, (p. 3-118)			
The setting of this timer stage is relevant only if parameter subset selection is carried out via the binary signal inputs. Any voltage-free pause that may occur during selection is bridged. If, after this time period has elapsed, no binary signal input has yet been set, then the parameter subset selected from the local control panel shall apply.							

Self-monitoring

Parameter							Address
Default	**Min**	**Max**	**Unit**				**Logic Diagram**
SFMON: Fct. assign. warning							021 030
060 000: MAIN: Without function				Fig. 3-83, (p. 3-119)			
Selection of the signals whose appearance shall result in the signals “Warning (LED)” and “Warning (relay)” and in the activation of the LED indicator labeled “ALARM”. Signals caused by faulty hardware and leading to blocking of the device are not configurable. They always result in the above signals and indication.							
SFMON: Mon.sig. retention							021 018
Blocked	0	240	h				
This setting defines the duration (in hours) for which a device-internal fault is stored, so that a decision may be taken between an automatic warm restart and an automatic device blocking. (Setting to *Blocked* may be considered the same as unlimited storage.)							

Fault recording

Parameter							Address
Default	**Min**	**Max**	**Unit**				**Logic Diagram**
FT_RC: Fct. assig. trigger							003 085
060 000: MAIN: Without function				Fig. 3-95, (p. 3-136)			
This setting defines the signals that will trigger fault recording.							
FT_RC: Id>							016 018
Blocked	0.01	30.00	Iref				
This setting defines the threshold value of the differential current that will trigger disturbance recording.							
FT_RC: IR>							016 019
Blocked	0.01	30.00	Iref				
This setting defines the threshold value of the restraining current that will trigger fault recording.							
FT_RC: Pre-fault time							003 078
5	1	50	Periods	Fig. 3-97, (p. 3-139)			
Setting for the time during which data will be recorded before the onset of a fault (pre-fault recording time).							
FT_RC: Post-fault time							003 079
2	1	50	Periods	Fig. 3-97, (p. 3-139)			
Setting for the time during which data will be recorded after the end of a fault (post-fault recording time).							
FT_RC: Max. recording time							003 075
50	5	300	Periods	Fig. 3-97, (p. 3-139)			
Setting for the maximum recording time per fault. This includes pre-fault and post-fault recording times.							

7.1.3.2 General Functions

Main function

Parameter						Address
Default	**Min**	**Max**	**Unit**		**Logic Diagram**	
MAIN: Evaluation IN, end a						016 096
1: Calculated				Fig. 3-52, (p. 3-87)		
MAIN: Evaluation IN, end b						016 097
1: Calculated				Fig. 3-52, (p. 3-87)		
MAIN: Evaluation IN, end c						016 098
1: Calculated				Fig. 3-52, (p. 3-87)		
This setting specifies which current will be used by the P633 as the residual current: either the calculated residual current derived from the sum of the phase currents or the residual current measured at the fourth transformer.						
MAIN: Current summation						019 099
0: Without				Fig. 3-53, (p. 3-88)		
For two ends of the transformer, the currents for each phase and the residual currents can be combined. This setting specifies the transformer ends to be involved.						
MAIN: Hold time dyn.param.						018 009
Blocked	0.00	100.00	s	Fig. 3-64, (p. 3-102)		
Setting for the hold time of the “dynamic parameters”. During this period, the “dynamic” thresholds are active in place of the “normal” thresholds.						

Differential protection

Parameter							Address
Default	**Min**	**Max**	**Unit**				**Logic Diagram**
DIFF: General enable USER							019 080
0: No							
Disabling and enabling the differential protection function.							
DIFF: Reference power Sref							019 016
38.1	0.1	5000.0	MVA	Fig. 3-99, (p. 3-143)			
Setting for the reference power, usually the nominal transformer power.							
DIFF: Ref. curr. Iref,a							019 023
Not measured	0.000	50.000	kA	Fig. 3-99, (p. 3-143)			
Display of the reference current calculated by the P633 for end a.							
DIFF: Ref. curr. Iref,b							019 024
Not measured	0.000	50.000	kA	Fig. 3-99, (p. 3-143)			
Display of the reference current calculated by the P633 for end b.							
DIFF: Ref. curr. Iref,c							019 025
Not measured	0.000	50.000	kA	Fig. 3-99, (p. 3-143)			
Display of the reference current calculated by the P633 for end c.							
DIFF: Matching fact. kam,a							004 105
Not measured	0.000	50.000		Fig. 3-99, (p. 3-143)			
Display of the matching factor calculated by the P633 for end a.							
DIFF: Matching fact. kam,b							004 106
Not measured	0.000	50.000		Fig. 3-99, (p. 3-143)			
Display of the matching factor calculated by the P633 for end b.							
DIFF: Matching fact. kam,c							004 127
Not measured	0.000	50.000		Fig. 3-99, (p. 3-143)			
Display of the matching factor calculated by the P633 for end c.							
DIFF: Meas. value rel. Id							011 037
0.000	0.000	0.200	Iref	Fig. 3-110, (p. 3-156)			
Setting for the minimum differential current that must be exceeded in order for the P633 to display the differential currents as measured operating data.							
DIFF: Meas. value rel. IR							011 038
0.000	0.000	0.200	Iref	Fig. 3-110, (p. 3-156)			
Setting for the minimum restraining current that must be exceeded in order for the P633 to display the restraining currents as measured operating data.							

Ground differential protection

Parameter						Address
Default	Min	Max	Unit			Logic Diagram
REF_1: General enable USER						019 050
0: No				Fig. 3-111, (p. 3-158)		
REF_2: General enable USER						019 150
0: No						
REF_3: General enable USER						019 250
0: No						
Disabling or enabling the ground fault differential protection.						
REF_1: Select. meas. input						019 100
0: End a						
REF_2: Select. meas. input						019 101
1: End b						
REF_3: Select. meas. input						019 102
2: End c						
Display of the measuring input that provides the measured values evaluated by the ground differential protection function.						
REF_1: Add.meas.inp. end b						019 120
0: No						
REF_1: Add.meas.inp. end c						019 121
0: No						
In case of protecting an autotransformer, select whether this end shall be considered by the REF function in addition to the phase currents in end a (T14) and the the neutral-point current.						
REF_1: Reference power Sref						019 031
38.1	0.1	5000.0	MVA	Fig. 3-112, (p. 3-160)		
REF_2: Reference power Sref						019 032
38.1	0.1	5000.0	MVA			
REF_3: Reference power Sref						019 033
38.1	0.1	5000.0	MVA			
Setting for the reference power, usually the nominal transformer power for the relevant transformer end.						
REF_1: Ref. curr. Iref						019 034
Not measured	0.000	50.000	kA	Fig. 3-112, (p. 3-160)		
REF_2: Ref. curr. Iref						019 035
Not measured	0.000	50.000	kA			

Parameter							Address
Default	**Min**	**Max**	**Unit**				**Logic Diagram**
REF_3: Ref. curr. Iref							019 036
Not measured	0.000	50.000	kA				
Display of the reference current calculated by the P633.							
REF_1: Match. fact. kam,N,a							004 160
Not measured	0.000	50.000		Fig. 3-112, (p. 3-160)			
REF_1: Match. fact. kam,N,b							019 123
Not measured	0.000	50.000					
REF_1: Match. fact. kam,N,c							019 124
Not measured	0.000	50.000					
REF_3: Matching fact. kam,N							004 162
Not measured	0.000	50.000					
Display of the matching factor calculated by the P633.							
REF_1: Matching fact. kam,Y							004 163
Not measured	0.000	50.000		Fig. 3-112, (p. 3-160)			
REF_2: Matching fact. kam,Y							004 164
Not measured	0.000	50.000					
REF_3: Matching fact. kam,Y							004 165
Not measured	0.000	50.000					
Display of the matching factor calculated by the P633 for the neutral-point current.							
REF_1: Meas. value rel. Id							011 039
0.00	0.00	0.20	Iref	Fig. 3-116, (p. 3-165)			
REF_2: Meas. value rel. Id							011 044
0.00	0.00	0.20	Iref				
REF_3: Meas. value rel. Id							011 045
0.00	0.00	0.20	Iref				
Setting for the minimum differential current that must be exceeded in order for the P633 to display the differential currents as measured operating data.							
REF_1: Meas. value rel. IR							011 040
0.00	0.00	0.20	Iref	Fig. 3-116, (p. 3-165)			
REF_2: Meas. value rel. IR							011 046
0.00	0.00	0.20	Iref				
REF_3: Meas. value rel. IR							011 047
0.00	0.00	0.20	Iref				
Setting for the minimum restraining current that must be exceeded in order for the P633 to display the restraining currents as measured operating data.							

Ground differential protection

Parameter						Address
Default	Min	Max	Unit			Logic Diagram
REF_2: Matching fact. kam,N						004 161
Not measured	0.000	50.000				
Display of the matching factor calculated by the P633 for the vector sum of the phase currents.						

Definite-time over-current protection

Parameter						Address
Default	Min	Max	Unit			Logic Diagram
DTOC1: General enable USER						031 135
0: No				Fig. 3-119, (p. 3-169)		
DTOC2: General enable USER						031 136
0: No						
DTOC3: General enable USER						031 139
0: No						
Enabling/disabling the definite-time overcurrent protection function.						
DTOC1: Select. meas. input						019 103
0: End a				Fig. 3-118, (p. 3-168)		
DTOC2: Select. meas. input						019 104
1: End b						
DTOC3: Select. meas. input						019 105
2: End c						
Selection of the measuring input that provides the measured values monitored by the definite-time overcurrent protection function.						

Inverse-time overcurrent protection

Parameter					Address
Default	Min	Max	Unit		Logic Diagram
IDMT1: General enable USER					031 141
0: No				Fig. 3-127, (p. 3-177)	
IDMT2: General enable USER					031 142
0: No					
IDMT3: General enable USER					031 143
0: No					
Disabling and enabling the inverse-time overcurrent protection function.					
IDMT1: Select. meas. input					019 106
0: End a				Fig. 3-126, (p. 3-176)	
IDMT2: Select. meas. input					019 116
1: End b					
IDMT3: Select. meas. input					019 126
2: End c					
Selection of the measuring input that provides the measured variables monitored by the inverse-time overcurrent protection function.					

Thermal overload protection

Parameter						Address
Default	**Min**	**Max**	**Unit**		**Logic Diagram**	
THRM1: General enable USER						031 144
0: No				Fig. 3-139, (p. 3-190)		
THRM2: General enable USER						031 145
0: No						
Disabling and enabling the thermal overload protection function.						
THRM1: Select. meas. input						019 109
1: End b				Fig. 3-138, (p. 3-189) Fig. 3-141, (p. 3-191)		
THRM2: Select. meas. input						019 110
2: End c						
Selection of the current relevant for thermal overload protection. Select from the currents measured at the measuring input for end a, b, c. There is an additional option, namely the selection of the value obtained according to the setting at **MAIN: Current summation**.						
THRM1: Operating mode						039 121
2: Relative replica				Fig. 3-144, (p. 3-195)		
THRM2: Operating mode						039 181
2: Relative replica						
Setting for the operating mode of thermal overload protection. Select between *Absolute replica* and *Relative replica*.						
THRM1: O/T f.Iref persist 1						004 152
Not measured	-40	300	°C			
THRM2: O/T f.Iref persist 2						004 172
Not measured	-40	300	°C			
Display of the difference between the settings for the maximum permissible temperatures of the protected object and the coolant.						

Time-voltage protection

Parameter						Address
Default	**Min**	**Max**	**Unit**		**Logic Diagram**	
V<>: General enable USER						023 030
0: No				Fig. 3-146, (p. 3-197)		
Disabling or enabling time-voltage protection.						

Over-/ underfrequency protection

Parameter							Address
Default	**Min**	**Max**	**Unit**				**Logic Diagram**
f<>: General enable USER							023 031
0: No				Fig. 3-149, (p. 3-200)			
Disabling or enabling over-/underfrequency protection.							
f<>: Evaluation time							018 201
5	3	6	Periods	Fig. 3-150, (p. 3-201)			
Setting for the evaluation time. The operate conditions must be met for the duration of the set evaluation time in order for a signal to be issued.							
f<>: Undervolt. block. V<							018 200
0.90	0.20	1.00	Vnom	Fig. 3-150, (p. 3-201)			
Setting for the threshold of undervoltage blocking. If the voltage falls below this threshold, the over-/underfrequency protection function will be blocked.							

Overfluxing protection

Parameter							Address
Default	**Min**	**Max**	**Unit**				**Logic Diagram**
V/f: General enable USER							019 097
0: No				Fig. 3-153, (p. 3-205)			
Enabling or disabling the Overfluxing protection function.							

Current transformer supervision

Parameter							Address
Default	**Min**	**Max**	**Unit**				**Logic Diagram**
CTS: General enable USER							031 085
0: No				Fig. 3-161, (p. 3-211)			
Enabling or disabling the current transformer supervision function.							

Measuring-circuit monitoring

Parameter					Address
Default	Min	Max	Unit		Logic Diagram
MCM_1: General enable USER					031 146
0: No					
MCM_2: General enable USER					031 147
0: No					
MCM_3: General enable USER					031 148
0: No					
Enabling or disabling the measuring-circuit monitoring function.					
MCM_1: Select. meas. input					031 150
0: End a					
MCM_2: Select. meas. input					031 151
1: End b					
MCM_3: Select. meas. input					031 152
2: End c					
Assigning measuring-circuit monitoring functions to ends a, b and c.					

Circuit breaker failure protection

Parameter					Address
Default	Min	Max	Unit		Logic Diagram
CBF_1: General enable USER					022 080
0: No				Fig. 3-171, (p. 3-220)	
CBF_2: General enable USER					022 214
0: No					
CBF_3: General enable USER					022 228
0: No					
Disabling or enabling circuit breaker failure protection.					
CBF_1: Select. meas. input					022 156
0: End a					
CBF_2: Select. meas. input					022 157
1: End b					
CBF_3: Select. meas. input					022 158
2: End c					
Selection of measuring input – the circuit breaker failure protection is controlled by its current.					
CBF_1: Fct.assign. starting					022 202
060 000: MAIN: Without function				Fig. 3-175, (p. 3-224)	
CBF_2: Fct.assign. starting					022 216
060 000: MAIN: Without function					
CBF_3: Fct.assign. starting					022 230
060 000: MAIN: Without function					
Select which of the trip commands is to be used as a start criterion for the CBF function.					
CBF_1: Start with man. trip					022 154
0: No				Fig. 3-175, (p. 3-224)	
CBF_2: Start with man. trip					022 175
0: No					
CBF_3: Start with man. trip					022 176
0: No					
Setting that permit a manual trip signal to also be used as a start criterion.					
CBF_1: Fct.assignm. CBAux.					022 159
060 000: MAIN: Without function				Fig. 3-175, (p. 3-224)	
CBF_2: Fct.assignm. CBAux.					022 217
060 000: MAIN: Without function					

Parameter							Address
Default	**Min**	**Max**	**Unit**			**Logic Diagram**	
CBF_3: Fct.assignm. CBAux.							022 231
060 000: MAIN: Without function							
Selection of trip signals – assigned to Gen. trip command 1 – for which, in addition to current flow monitoring, status signals from CB auxiliary contacts are evaluated.							
CBF_1: I<							022 160
1.00	0.05	20.00	Inom	Fig. 3-173, (p. 3-222) Fig. 3-175, (p. 3-224) Fig. 3-179, (p. 3-227) Fig. 3-180, (p. 3-227)			
CBF_2: I<							022 215
1.00	0.05	20.00	Inom				
CBF_3: I<							022 229
1.00	0.05	20.00	Inom				
Setting for the threshold to detect a break in current flow.							
CBF_1: IN<							022 180
1.00	0.05	20.00	Inom				
CBF_2: IN<							022 181
1.00	0.05	20.00	Inom				
CBF_3: IN<							022 182
1.00	0.05	20.00	Inom				
Setting of the comparator threshold for residual current monitoring function.							
CBF_1: Evaluation IN							022 184
0: Without				Fig. 3-173, (p. 3-222)			
CBF_2: Evaluation IN							022 185
0: Without							
CBF_3: Evaluation IN							022 186
0: Without							
Select whether the measured or the calculated residual current shall be used for residual current monitoring function. This choice is only possible when a measuring input for the residual current is available, otherwise the internally derived value of the residual current is always used, regardless of the setting.							
CBF_1: t1 3p							022 165
0.15	0.00	100.00	s	Fig. 3-176, (p. 3-225)			
CBF_2: t1 3p							022 221
0.15	0.00	100.00	s				

Parameter							Address
Default	**Min**	**Max**	**Unit**				**Logic Diagram**
CBF_3: t1 3p							022 234
0.15	0.00	100.00	s				
Setting the 1st CBF timer stage to 3-pole operating mode.							
CBF_1: t2							022 166
0.25	0.00	100.00	s	Fig. 3-176, (p. 3-225)			
CBF_2: t2							022 222
0.25	0.00	100.00	s				
CBF_3: t2							022 235
0.25	0.00	100.00	s				
Setting for the 2nd CBF timer stage.							
CBF_1: Min.dur. trip cmd.t1							022 167
0.25	0.10	10.00	s	Fig. 3-177, (p. 3-226)			
CBF_2: Min.dur. trip cmd.t1							022 223
0.25	0.10	10.00	s				
CBF_3: Min.dur. trip cmd.t1							022 236
0.25	0.10	10.00	s				
Setting the 1st timer stage for minimum duration of trip command.							
CBF_1: Min.dur. trip cmd.t2							022 168
0.25	0.10	10.00	s	Fig. 3-177, (p. 3-226)			
CBF_2: Min.dur. trip cmd.t2							022 224
0.25	0.10	10.00	s				
CBF_3: Min.dur. trip cmd.t2							022 237
0.25	0.10	10.00	s				
Setting the 2nd timer stage for minimum duration of trip command.							
CBF_1: Latching trip cmd.t1							022 169
0: No				Fig. 3-177, (p. 3-226)			
CBF_2: Latching trip cmd.t1							022 225
0: No							
CBF_3: Latching trip cmd.t1							022 238
0: No							
The 1st timer stage trip command, set to latch mode, will remain active until reset by operating parameters or through an appropriately configured binary signal input.							
CBF_1: Latching trip cmd.t2							022 170
0: No				Fig. 3-177, (p. 3-226)			
CBF_2: Latching trip cmd.t2							022 226
0: No							

Parameter							Address
Default	**Min**	**Max**	**Unit**			**Logic Diagram**	
CBF_3: Latching trip cmd.t2							022 239
0: No							
The 2nd timer stage trip command, set to latch mode, will remain active until reset by operating parameters or through an appropriately configured binary signal input.							
CBF_1: Delay/starting trig.							022 155
0.00	0.00	100.00	s	Fig. 3-178, (p. 3-226)			
CBF_2: Delay/starting trig.							022 220
0.00	0.00	100.00	s				
CBF_3: Delay/starting trig.							022 233
0.00	0.00	100.00	s				
The signal **CBF_1: Trip signal** (or **CBF_2: Trip signal**, . . ., resp.) is issued when this timer stage's time duration has elapsed.							
CBF_1: Delay/fault beh. CB							022 171
0.12	0.00	100.00	s	Fig. 3-179, (p. 3-227)			
CBF_2: Delay/fault beh. CB							022 227
0.12	0.00	100.00	s				
CBF_3: Delay/fault beh. CB							022 240
0.12	0.00	100.00	s				
If during this delay time period the circuit breaker does not provide a signal from its auxiliary contacts that it is closed, then faults behind the CB are recognized through the current criterion (see section “Fault behind CB protection”).							
CBF_1: Delay/CB sync.superv							022 172
Blocked	0.00	100.00	s	Fig. 3-180, (p. 3-227)			
CBF_2: Delay/CB sync.superv							022 218
Blocked	0.00	100.00	s				
CBF_3: Delay/CB sync.superv							022 241
Blocked	0.00	100.00	s				
Setting for the time delay to bridge circuit breaker operate times during CB synchronization supervision.							

Limit value monitoring

Parameter					Address
Default	**Min**	**Max**	**Unit**		**Logic Diagram**
LIMIT: General enable USER					014 010
0: No				Fig. 3-181, (p. 3-229)	
Disabling or enabling limit value monitoring.					
LIMIT: IDC,lin>					014 110
Blocked	0.100	1.100	IDC,nom	Fig. 3-181, (p. 3-229)	
Setting for the operate value IDC,lin> for monitoring the linearized direct current.					
LIMIT: IDC,lin>>					014 111
Blocked	0.100	1.100	IDC,nom	Fig. 3-181, (p. 3-229)	
Setting for the operate value IDC,lin>> for monitoring the linearized direct current.					
LIMIT: tIDC,lin>					014 112
Blocked	0.00	20.00	s	Fig. 3-181, (p. 3-229)	
Setting for the operate delay of overcurrent stage IDC,lin>.					
LIMIT: tIDC,lin>>					014 113
Blocked	0.00	20.00	s	Fig. 3-181, (p. 3-229)	
Setting for the operate delay of overcurrent stage IDC,lin>>.					
LIMIT: IDC,lin<					014 114
Blocked	0.100	1.100	IDC,nom	Fig. 3-181, (p. 3-229)	
Setting for the operate value IDC,lin< for monitoring the linearized direct current.					
LIMIT: IDC,lin<<					014 115
Blocked	0.100	1.100	IDC,nom	Fig. 3-181, (p. 3-229)	
Setting for the operate value IDC,lin<< for monitoring the linearized direct current.					
LIMIT: tIDC,lin<					014 116
Blocked	0.00	20.00	s	Fig. 3-181, (p. 3-229)	
Setting for the operate delay of undercurrent stage IDC,lin<.					
LIMIT: tIDC,lin<<					014 117
Blocked	0.00	20.00	s	Fig. 3-181, (p. 3-229)	
Setting for the operate delay of undercurrent stage IDC,lin<<.					
LIMIT: T>					014 100
200	-20	200	°C	Fig. 3-182, (p. 3-230)	
Setting for the operate value of temperature monitoring T>.					

Parameter							Address
Default	**Min**	**Max**	**Unit**				**Logic Diagram**
LIMIT: T>>							014 101
200	-20	200	°C	Fig. 3-182, (p. 3-230)			
Setting for the operate value of temperature monitoring T>>.							
LIMIT: tT>							014 103
Blocked	0	1000	s	Fig. 3-182, (p. 3-230)			
Setting for the operate delay of temperature monitoring T>.							
LIMIT: tT>>							014 104
Blocked	0	1000	s	Fig. 3-182, (p. 3-230)			
Setting for the operate delay of temperature monitoring T>>.							
LIMIT: T<							014 105
-20	-20	200	°C	Fig. 3-182, (p. 3-230)			
Setting for the operate value of temperature monitoring T<.							
LIMIT: T<<							014 106
-20	-20	200	°C	Fig. 3-182, (p. 3-230)			
Setting for the operate value of temperature monitoring T<<.							
LIMIT: tT<							014 107
Blocked	0	1000	s	Fig. 3-182, (p. 3-230)			
Setting for the operate delay of temperature monitoring T<.							
LIMIT: tT<<							014 108
Blocked	0	1000	s	Fig. 3-182, (p. 3-230)			
Setting for the operate delay of temperature monitoring T<<.							

Limit value monitoring

Parameter						Address
Default	**Min**	**Max**	**Unit**			**Logic Diagram**
LIM_1: General enable USER						014 014
0: No				Fig. 3-184, (p. 3-232)		
LIM_2: General enable USER						014 015
0: No						
LIM_3: General enable USER						014 017
0: No						
Enabling or disabling the limit value monitoring function.						
LIM_1: Select. meas. input						019 111
0: End a				Fig. 3-183, (p. 3-231)		
LIM_2: Select. meas. input						019 112
1: End b						
LIM_3: Select. meas. input						019 113
2: End c						
Selecting a measuring input for limit value monitoring of the measured values.						
LIM_1: I>						015 116
1.20	0.20	4.00	Inom	Fig. 3-184, (p. 3-232)		
LIM_2: I>						016 116
1.20	0.20	4.00	Inom			
LIM_3: I>						017 114
1.20	0.20	4.00	Inom			
Setting for the operate value of I>.						
LIM_1: I>>						015 117
Blocked	0.20	4.00	Inom	Fig. 3-184, (p. 3-232)		
LIM_2: I>>						016 117
Blocked	0.20	4.00	Inom			
LIM_3: I>>						017 117
Blocked	0.20	4.00	Inom			
Setting for the operate value of I>>.						
LIM_1: tI>						015 120
5	0	100	s	Fig. 3-184, (p. 3-232)		
LIM_2: tI>						016 120
5	0	100	s			
LIM_3: tI>						017 120
5	0	100	s			
Setting for the operate delay of I>.						

Parameter							Address
Default	**Min**	**Max**	**Unit**			**Logic Diagram**	
LIM_1: tI>>							015 121
Blocked	0	100	s	Fig. 3-184, (p. 3-232)			
LIM_2: tI>>							016 121
Blocked	0	100	s				
LIM_3: tI>>							017 121
Blocked	0	100	s				
Setting for the operate delay of I>>.							
LIM_1: I<							015 118
0.10	0.00	4.00	Inom	Fig. 3-184, (p. 3-232)			
LIM_2: I<							016 118
0.10	0.00	4.00	Inom				
LIM_3: I<							017 118
0.10	0.00	4.00	Inom				
Setting for the operate value of I<.							
LIM_1: I<<							015 119
Blocked	0.00	4.00	Inom	Fig. 3-184, (p. 3-232)			
LIM_2: I<<							016 119
Blocked	0.00	4.00	Inom				
LIM_3: I<<							017 119
Blocked	0.00	4.00	Inom				
Setting for the operate value of I<<.							
LIM_1: tI<							015 122
5	0	100	s	Fig. 3-184, (p. 3-232)			
LIM_2: tI<							016 122
5	0	100	s				
LIM_3: tI<							017 122
5	0	100	s				
Setting for the operate delay of I<.							
LIM_1: tI<<							015 123
Blocked	0	100	s	Fig. 3-184, (p. 3-232)			
LIM_2: tI<<							016 123
Blocked	0	100	s				
LIM_3: tI<<							017 123
Blocked	0	100	s				
Setting for the operate delay of I<<.							

Transformer monitoring

Parameter						Address
Default	Min	Max	Unit			Logic Diagram
TRMON: General enable USER						018 040
0: No				Fig. 3-185, (p. 3-233)		
Disabling or enabling the transformer monitoring.						

Programmable Logic

Parameter							Address
Default	Min	Max	Unit			Logic Diagram	
LOG_2: General enable USER							011 137
0: No				Fig. 3-188, (p. 3-237)			
Enable/disable the function group LOG_2 (Programmable Logic 2).							
LOG_2: Fct.assignm. outp. 1							050 000
060 000: MAIN: Without function				Fig. 3-188, (p. 3-237)			
LOG_2: Fct.assignm. outp. 2							050 004
060 000: MAIN: Without function			s				
LOG_2: Fct.assignm. outp. 3							050 008
060 000: MAIN: Without function							
LOG_2: Fct.assignm. outp. 4							050 012
060 000: MAIN: Without function							
These settings assign functions to the outputs.							
LOG_2: Op. mode t output 1							050 001
0: Without timer stage				Fig. 3-188, (p. 3-237)			
LOG_2: Op. mode t output 2							050 005
0: Without timer stage							
LOG_2: Op. mode t output 3							050 009
0: Without timer stage							
LOG_2: Op. mode t output 4							050 013
0: Without timer stage							
These settings define the operating modes for the output timer stages.							
LOG_2: Time t1 output 1							050 002
0	0	60000	s	Fig. 3-188, (p. 3-237)			
LOG_2: Time t1 output 2							050 006
0	0	60000	s				
LOG_2: Time t1 output 3							050 010
0	0	60000	s				
LOG_2: Time t1 output 4							050 014
0	0	60000	s				
Settings of timer stage t1 for the respective outputs.							
LOG_2: Time t2 output 1							050 003
0	0	60000	s	Fig. 3-188, (p. 3-237)			
LOG_2: Time t2 output 2							050 007
0	0	60000	s				
LOG_2: Time t2 output 3							050 011
0	0	60000	s				

Parameter							Address
Default	**Min**	**Max**	**Unit**				**Logic Diagram**
LOG_2: Time t2 output 4							050 015
0	0	60000	s				
Settings for timer stage t2 for the respective outputs. **Note:** This setting has no effect in the “minimum time” operating mode.							
LOG_2: Sig.assig. outp. 1							064 000
061 000: MAIN: Without function							
LOG_2: Sig.assig. outp. 2							064 002
061 000: MAIN: Without function							
LOG_2: Sig.assig. outp. 3							064 004
061 000: MAIN: Without function							
LOG_2: Sig.assig. outp. 4							064 006
061 000: MAIN: Without function							
These settings assign the function of a binary input signal to the output of the logic equation.							
LOG_2: Sig.assig.outp. 1(t)							064 001
061 000: MAIN: Without function							
LOG_2: Sig.assig.outp. 2(t)							064 003
061 000: MAIN: Without function							
LOG_2: Sig.assig.outp. 3(t)							064 005
061 000: MAIN: Without function							
LOG_2: Sig.assig.outp. 4(t)							064 007
061 000: MAIN: Without function							
These settings assign the function of a binary input signal to the output of the logic equation.							

Programmable Logic

Parameter							Address
Default	Min	Max	Unit			Logic Diagram	
LOGIC: General enable USER							031 099
0: No				Fig. 3-187, (p. 3-236)			
Enable/disable the logic function.							
LOGIC: Set 1 USER							034 030
0: No				Fig. 3-186, (p. 3-235)			
LOGIC: Set 2 USER							034 031
0: No							
LOGIC: Set 3 USER							034 032
0: No							
LOGIC: Set 4 USER							034 033
0: No							
LOGIC: Set 5 USER							034 034
0: No							
LOGIC: Set 6 USER							034 035
0: No							
LOGIC: Set 7 USER							034 036
0: No							
LOGIC: Set 8 USER							034 037
0: No							
These settings define the static input conditions for the logic function.							
LOGIC: Fct.assignm. outp. 1							030 000
060 000: MAIN: Without function				Fig. 3-187, (p. 3-236)			
LOGIC: Fct.assignm. outp. 2							030 004
060 000: MAIN: Without function			s				
LOGIC: Fct.assignm. outp. 3							030 008
060 000: MAIN: Without function							
LOGIC: Fct.assignm. outp. 4							030 012
060 000: MAIN: Without function							
LOGIC: Fct.assignm. outp. 5							030 016
060 000: MAIN: Without function							
LOGIC: Fct.assignm. outp. 6							030 020
060 000: MAIN: Without function							
LOGIC: Fct.assignm. outp. 7							030 024
060 000: MAIN: Without function							
LOGIC: Fct.assignm. outp. 8							030 028
060 000: MAIN: Without function							

Parameter						Address
Default	Min	Max	Unit			Logic Diagram
LOGIC: Fct.assignm. outp. 9						030 032
060 000: MAIN: Without function						
LOGIC: Fct.assignm. outp.10						030 036
060 000: MAIN: Without function						
LOGIC: Fct.assignm. outp.11						030 040
060 000: MAIN: Without function						
LOGIC: Fct.assignm. outp.12						030 044
060 000: MAIN: Without function						
LOGIC: Fct.assignm. outp.13						030 048
060 000: MAIN: Without function						
LOGIC: Fct.assignm. outp.14						030 052
060 000: MAIN: Without function						
LOGIC: Fct.assignm. outp.15						030 056
060 000: MAIN: Without function						
LOGIC: Fct.assignm. outp.16						030 060
060 000: MAIN: Without function						
LOGIC: Fct.assignm. outp.17						030 064
060 000: MAIN: Without function						
LOGIC: Fct.assignm. outp.18						030 068
060 000: MAIN: Without function						
LOGIC: Fct.assignm. outp.19						030 072
060 000: MAIN: Without function						
LOGIC: Fct.assignm. outp.20						030 076
060 000: MAIN: Without function						
LOGIC: Fct.assignm. outp.21						030 080
060 000: MAIN: Without function						
LOGIC: Fct.assignm. outp.22						030 084
060 000: MAIN: Without function						
LOGIC: Fct.assignm. outp.23						030 088
060 000: MAIN: Without function						
LOGIC: Fct.assignm. outp.24						030 092
060 000: MAIN: Without function						
LOGIC: Fct.assignm. outp.25						030 096
060 000: MAIN: Without function						
LOGIC: Fct.assignm. outp.26						031 000
060 000: MAIN: Without function						
LOGIC: Fct.assignm. outp.27						031 004
060 000: MAIN: Without function						

Parameter						Address
Default	Min	Max	Unit			Logic Diagram
LOGIC: Fct.assignm. outp.28						031 008
060 000: MAIN: Without function						
LOGIC: Fct.assignm. outp.29						031 012
060 000: MAIN: Without function						
LOGIC: Fct.assignm. outp.30						031 016
060 000: MAIN: Without function						
LOGIC: Fct.assignm. outp.31						031 020
060 000: MAIN: Without function						
LOGIC: Fct.assignm. outp.32						031 024
060 000: MAIN: Without function						
LOGIC: Fct.assignm. outp.33						030 100
060 000: MAIN: Without function						
LOGIC: Fct.assignm. outp.34						030 104
060 000: MAIN: Without function						
LOGIC: Fct.assignm. outp.35						030 108
060 000: MAIN: Without function						
LOGIC: Fct.assignm. outp.36						030 112
060 000: MAIN: Without function						
LOGIC: Fct.assignm. outp.37						030 116
060 000: MAIN: Without function						
LOGIC: Fct.assignm. outp.38						030 120
060 000: MAIN: Without function						
LOGIC: Fct.assignm. outp.39						030 124
060 000: MAIN: Without function						
LOGIC: Fct.assignm. outp.40						030 128
060 000: MAIN: Without function						
LOGIC: Fct.assignm. outp.41						030 132
060 000: MAIN: Without function						
LOGIC: Fct.assignm. outp.42						030 136
060 000: MAIN: Without function						
LOGIC: Fct.assignm. outp.43						030 140
060 000: MAIN: Without function						
LOGIC: Fct.assignm. outp.44						030 144
060 000: MAIN: Without function						
LOGIC: Fct.assignm. outp.45						030 148
060 000: MAIN: Without function						
LOGIC: Fct.assignm. outp.46						030 152
060 000: MAIN: Without function						

Parameter						Address
Default	Min	Max	Unit			Logic Diagram
LOGIC: Fct.assignm. outp.47						030 156
060 000: MAIN: Without function						
LOGIC: Fct.assignm. outp.48						030 160
060 000: MAIN: Without function						
LOGIC: Fct.assignm. outp.49						030 164
060 000: MAIN: Without function						
LOGIC: Fct.assignm. outp.50						030 168
060 000: MAIN: Without function						
LOGIC: Fct.assignm. outp.51						030 172
060 000: MAIN: Without function						
LOGIC: Fct.assignm. outp.52						030 176
060 000: MAIN: Without function						
LOGIC: Fct.assignm. outp.53						030 180
060 000: MAIN: Without function						
LOGIC: Fct.assignm. outp.54						030 184
060 000: MAIN: Without function						
LOGIC: Fct.assignm. outp.55						030 188
060 000: MAIN: Without function						
LOGIC: Fct.assignm. outp.56						030 192
060 000: MAIN: Without function						
LOGIC: Fct.assignm. outp.57						030 196
060 000: MAIN: Without function						
LOGIC: Fct.assignm. outp.58						030 200
060 000: MAIN: Without function						
LOGIC: Fct.assignm. outp.59						030 204
060 000: MAIN: Without function						
LOGIC: Fct.assignm. outp.60						030 208
060 000: MAIN: Without function						
LOGIC: Fct.assignm. outp.61						030 212
060 000: MAIN: Without function						
LOGIC: Fct.assignm. outp.62						030 216
060 000: MAIN: Without function						
LOGIC: Fct.assignm. outp.63						030 220
060 000: MAIN: Without function						
LOGIC: Fct.assignm. outp.64						030 224
060 000: MAIN: Without function						
LOGIC: Fct.assignm. outp.65						046 000
060 000: MAIN: Without function						

Parameter						Address
Default	Min	Max	Unit		Logic Diagram	
LOGIC: Fct.assignm. outp.66						045 004
060 000: MAIN: Without function						
LOGIC: Fct.assignm. outp.67						045 008
060 000: MAIN: Without function						
LOGIC: Fct.assignm. outp.68						045 012
060 000: MAIN: Without function						
LOGIC: Fct.assignm. outp.69						045 016
060 000: MAIN: Without function						
LOGIC: Fct.assignm. outp.70						045 020
060 000: MAIN: Without function						
LOGIC: Fct.assignm. outp.71						045 024
060 000: MAIN: Without function						
LOGIC: Fct.assignm. outp.72						045 028
060 000: MAIN: Without function						
LOGIC: Fct.assignm. outp.73						045 032
060 000: MAIN: Without function						
LOGIC: Fct.assignm. outp.74						045 036
060 000: MAIN: Without function						
LOGIC: Fct.assignm. outp.75						045 040
060 000: MAIN: Without function						
LOGIC: Fct.assignm. outp.76						045 044
060 000: MAIN: Without function						
LOGIC: Fct.assignm. outp.77						045 048
060 000: MAIN: Without function						
LOGIC: Fct.assignm. outp.78						045 052
060 000: MAIN: Without function						
LOGIC: Fct.assignm. outp.79						045 056
060 000: MAIN: Without function						
LOGIC: Fct.assignm. outp.80						045 060
060 000: MAIN: Without function						
LOGIC: Fct.assignm. outp.81						045 064
060 000: MAIN: Without function						
LOGIC: Fct.assignm. outp.82						045 068
060 000: MAIN: Without function						
LOGIC: Fct.assignm. outp.83						045 072
060 000: MAIN: Without function						
LOGIC: Fct.assignm. outp.84						045 076
060 000: MAIN: Without function						

Parameter						Address
Default	Min	Max	Unit			Logic Diagram
LOGIC: Fct.assignm. outp.85						045 080
060 000: MAIN: Without function						
LOGIC: Fct.assignm. outp.86						045 084
060 000: MAIN: Without function						
LOGIC: Fct.assignm. outp.87						045 088
060 000: MAIN: Without function						
LOGIC: Fct.assignm. outp.88						045 092
060 000: MAIN: Without function						
LOGIC: Fct.assignm. outp.89						045 096
060 000: MAIN: Without function						
LOGIC: Fct.assignm. outp.90						045 100
060 000: MAIN: Without function						
LOGIC: Fct.assignm. outp.91						045 104
060 000: MAIN: Without function						
LOGIC: Fct.assignm. outp.92						045 108
060 000: MAIN: Without function						
LOGIC: Fct.assignm. outp.93						045 112
060 000: MAIN: Without function						
LOGIC: Fct.assignm. outp.94						045 116
060 000: MAIN: Without function						
LOGIC: Fct.assignm. outp.95						045 120
060 000: MAIN: Without function						
LOGIC: Fct.assignm. outp.96						045 124
060 000: MAIN: Without function						
LOGIC: Fct.assignm. outp.97						045 128
060 000: MAIN: Without function						
LOGIC: Fct.assignm. outp.98						045 132
060 000: MAIN: Without function						
LOGIC: Fct.assignm. outp.99						045 136
060 000: MAIN: Without function						
LOGIC: Fct.assignm.outp.100						045 140
060 000: MAIN: Without function						
LOGIC: Fct.assignm.outp.101						045 144
060 000: MAIN: Without function						
LOGIC: Fct.assignm.outp.102						045 148
060 000: MAIN: Without function						
LOGIC: Fct.assignm.outp.103						045 152
060 000: MAIN: Without function						

Parameter						Address
Default	Min	Max	Unit			Logic Diagram
LOGIC: Fct.assignm.outp.104						045 156
060 000: MAIN: Without function						
LOGIC: Fct.assignm.outp.105						045 160
060 000: MAIN: Without function						
LOGIC: Fct.assignm.outp.106						045 164
060 000: MAIN: Without function						
LOGIC: Fct.assignm.outp.107						045 168
060 000: MAIN: Without function						
LOGIC: Fct.assignm.outp.108						045 172
060 000: MAIN: Without function						
LOGIC: Fct.assignm.outp.109						045 176
060 000: MAIN: Without function						
LOGIC: Fct.assignm.outp.110						045 180
060 000: MAIN: Without function						
LOGIC: Fct.assignm.outp.111						045 184
060 000: MAIN: Without function						
LOGIC: Fct.assignm.outp.112						045 188
060 000: MAIN: Without function						
LOGIC: Fct.assignm.outp.113						045 192
060 000: MAIN: Without function						
LOGIC: Fct.assignm.outp.114						045 196
060 000: MAIN: Without function						
LOGIC: Fct.assignm.outp.115						045 200
060 000: MAIN: Without function						
LOGIC: Fct.assignm.outp.116						045 204
060 000: MAIN: Without function						
LOGIC: Fct.assignm.outp.117						045 208
060 000: MAIN: Without function						
LOGIC: Fct.assignm.outp.118						045 212
060 000: MAIN: Without function						
LOGIC: Fct.assignm.outp.119						045 216
060 000: MAIN: Without function						
LOGIC: Fct.assignm.outp.120						045 220
060 000: MAIN: Without function						
LOGIC: Fct.assignm.outp.121						045 224
060 000: MAIN: Without function						
LOGIC: Fct.assignm.outp.122						045 228
060 000: MAIN: Without function						

Parameter						Address
Default	Min	Max	Unit		Logic Diagram	
LOGIC: Fct.assignm.outp.123						045 232
060 000: MAIN: Without function						
LOGIC: Fct.assignm.outp.124						045 236
060 000: MAIN: Without function						
LOGIC: Fct.assignm.outp.125						045 240
060 000: MAIN: Without function						
LOGIC: Fct.assignm.outp.126						045 244
060 000: MAIN: Without function						
LOGIC: Fct.assignm.outp.127						045 248
060 000: MAIN: Without function						
LOGIC: Fct.assignm.outp.128						045 252
060 000: MAIN: Without function						
These settings assign functions to the outputs.						
LOGIC: Op. mode t output 1						030 001
0: Without timer stage				Fig. 3-187, (p. 3-236)		
LOGIC: Op. mode t output 2						030 005
0: Without timer stage						
LOGIC: Op. mode t output 3						030 009
0: Without timer stage						
LOGIC: Op. mode t output 4						030 013
0: Without timer stage						
LOGIC: Op. mode t output 5						030 017
0: Without timer stage						
LOGIC: Op. mode t output 6						030 021
0: Without timer stage						
LOGIC: Op. mode t output 7						030 025
0: Without timer stage						
LOGIC: Op. mode t output 8						030 029
0: Without timer stage						
LOGIC: Op. mode t output 9						030 033
0: Without timer stage						
LOGIC: Op. mode t output 10						030 037
0: Without timer stage						
LOGIC: Op. mode t output 11						030 041
0: Without timer stage						
LOGIC: Op. mode t output 12						030 045
0: Without timer stage						

Parameter					Address
Default	Min	Max	Unit		Logic Diagram
LOGIC: Op. mode t output 13					030 049
0: Without timer stage					
LOGIC: Op. mode t output 14					030 053
0: Without timer stage					
LOGIC: Op. mode t output 15					030 057
0: Without timer stage					
LOGIC: Op. mode t output 16					030 061
0: Without timer stage					
LOGIC: Op. mode t output 17					030 065
0: Without timer stage					
LOGIC: Op. mode t output 18					030 069
0: Without timer stage					
LOGIC: Op. mode t output 19					030 073
0: Without timer stage					
LOGIC: Op. mode t output 20					030 077
0: Without timer stage					
LOGIC: Op. mode t output 21					030 081
0: Without timer stage					
LOGIC: Op. mode t output 22					030 085
0: Without timer stage					
LOGIC: Op. mode t output 23					030 089
0: Without timer stage					
LOGIC: Op. mode t output 24					030 093
0: Without timer stage					
LOGIC: Op. mode t output 25					030 097
0: Without timer stage					
LOGIC: Op. mode t output 26					031 001
0: Without timer stage					
LOGIC: Op. mode t output 27					031 005
0: Without timer stage					
LOGIC: Op. mode t output 28					031 009
0: Without timer stage					
LOGIC: Op. mode t output 29					031 013
0: Without timer stage					
LOGIC: Op. mode t output 30					031 017
0: Without timer stage					
LOGIC: Op. mode t output 31					031 021
0: Without timer stage					

Parameter						Address
Default	Min	Max	Unit			Logic Diagram
LOGIC: Op. mode t output 32						031 025
0: Without timer stage						
LOGIC: Op. mode t output 33						030 101
0: Without timer stage						
LOGIC: Op. mode t output 34						030 105
0: Without timer stage						
LOGIC: Op. mode t output 35						030 109
0: Without timer stage						
LOGIC: Op. mode t output 36						030 113
0: Without timer stage						
LOGIC: Op. mode t output 37						030 117
0: Without timer stage						
LOGIC: Op. mode t output 38						030 121
0: Without timer stage						
LOGIC: Op. mode t output 39						030 125
0: Without timer stage						
LOGIC: Op. mode t output 40						030 129
0: Without timer stage						
LOGIC: Op. mode t output 41						030 133
0: Without timer stage						
LOGIC: Op. mode t output 42						030 137
0: Without timer stage						
LOGIC: Op. mode t output 43						030 141
0: Without timer stage						
LOGIC: Op. mode t output 44						030 145
0: Without timer stage						
LOGIC: Op. mode t output 45						030 149
0: Without timer stage						
LOGIC: Op. mode t output 46						030 153
0: Without timer stage						
LOGIC: Op. mode t output 47						030 157
0: Without timer stage						
LOGIC: Op. mode t output 48						030 161
0: Without timer stage						
LOGIC: Op. mode t output 49						030 165
0: Without timer stage						
LOGIC: Op. mode t output 50						030 169
0: Without timer stage						

Parameter					Address
Default	Min	Max	Unit		Logic Diagram
LOGIC: Op. mode t output 51					030 173
0: Without timer stage					
LOGIC: Op. mode t output 52					030 177
0: Without timer stage					
LOGIC: Op. mode t output 53					030 181
0: Without timer stage					
LOGIC: Op. mode t output 54					030 185
0: Without timer stage					
LOGIC: Op. mode t output 55					030 189
0: Without timer stage					
LOGIC: Op. mode t output 56					030 193
0: Without timer stage					
LOGIC: Op. mode t output 57					030 197
0: Without timer stage					
LOGIC: Op. mode t output 58					030 201
0: Without timer stage					
LOGIC: Op. mode t output 59					030 205
0: Without timer stage					
LOGIC: Op. mode t output 60					030 209
0: Without timer stage					
LOGIC: Op. mode t output 61					030 213
0: Without timer stage					
LOGIC: Op. mode t output 62					030 217
0: Without timer stage					
LOGIC: Op. mode t output 63					030 221
0: Without timer stage					
LOGIC: Op. mode t output 64					030 225
0: Without timer stage					
LOGIC: Op. mode t output 65					046 001
0: Without timer stage					
LOGIC: Op. mode t output 66					045 005
0: Without timer stage					
LOGIC: Op. mode t output 67					045 009
0: Without timer stage					
LOGIC: Op. mode t output 68					045 013
0: Without timer stage					
LOGIC: Op. mode t output 69					045 017
0: Without timer stage					

Parameter						Address
Default	Min	Max	Unit			Logic Diagram
LOGIC: Op. mode t output 70						045 021
0: Without timer stage						
LOGIC: Op. mode t output 71						045 025
0: Without timer stage						
LOGIC: Op. mode t output 72						045 029
0: Without timer stage						
LOGIC: Op. mode t output 73						045 033
0: Without timer stage						
LOGIC: Op. mode t output 74						045 037
0: Without timer stage						
LOGIC: Op. mode t output 75						045 041
0: Without timer stage						
LOGIC: Op. mode t output 76						045 045
0: Without timer stage						
LOGIC: Op. mode t output 77						045 049
0: Without timer stage						
LOGIC: Op. mode t output 78						045 053
0: Without timer stage						
LOGIC: Op. mode t output 79						045 057
0: Without timer stage						
LOGIC: Op. mode t output 80						045 061
0: Without timer stage						
LOGIC: Op. mode t output 81						045 065
0: Without timer stage						
LOGIC: Op. mode t output 82						045 069
0: Without timer stage						
LOGIC: Op. mode t output 83						045 073
0: Without timer stage						
LOGIC: Op. mode t output 84						045 077
0: Without timer stage						
LOGIC: Op. mode t output 85						045 081
0: Without timer stage						
LOGIC: Op. mode t output 86						045 085
0: Without timer stage						
LOGIC: Op. mode t output 87						045 089
0: Without timer stage						
LOGIC: Op. mode t output 88						045 093
0: Without timer stage						

Parameter					Address
Default	Min	Max	Unit		Logic Diagram
LOGIC: Op. mode t output 89					045 097
0: Without timer stage					
LOGIC: Op. mode t output 90					045 101
0: Without timer stage					
LOGIC: Op. mode t output 91					045 105
0: Without timer stage					
LOGIC: Op. mode t output 92					045 109
0: Without timer stage					
LOGIC: Op. mode t output 93					045 113
0: Without timer stage					
LOGIC: Op. mode t output 94					045 117
0: Without timer stage					
LOGIC: Op. mode t output 95					045 121
0: Without timer stage					
LOGIC: Op. mode t output 96					045 125
0: Without timer stage					
LOGIC: Op. mode t output 97					045 129
0: Without timer stage					
LOGIC: Op. mode t output 98					045 133
0: Without timer stage					
LOGIC: Op. mode t output 99					045 137
0: Without timer stage					
LOGIC: Op. mode t output100					045 141
0: Without timer stage					
LOGIC: Op. mode t output101					045 145
0: Without timer stage					
LOGIC: Op. mode t output102					045 149
0: Without timer stage					
LOGIC: Op. mode t output103					045 153
0: Without timer stage					
LOGIC: Op. mode t output104					045 157
0: Without timer stage					
LOGIC: Op. mode t output105					045 161
0: Without timer stage					
LOGIC: Op. mode t output106					045 165
0: Without timer stage					
LOGIC: Op. mode t output107					045 169
0: Without timer stage					

Parameter					Address
Default	Min	Max	Unit		Logic Diagram
LOGIC: Op. mode t output108					045 173
0: Without timer stage					
LOGIC: Op. mode t output109					045 177
0: Without timer stage					
LOGIC: Op. mode t output110					045 181
0: Without timer stage					
LOGIC: Op. mode t output111					045 185
0: Without timer stage					
LOGIC: Op. mode t output112					045 189
0: Without timer stage					
LOGIC: Op. mode t output113					045 193
0: Without timer stage					
LOGIC: Op. mode t output114					045 197
0: Without timer stage					
LOGIC: Op. mode t output115					045 201
0: Without timer stage					
LOGIC: Op. mode t output116					045 205
0: Without timer stage					
LOGIC: Op. mode t output117					045 209
0: Without timer stage					
LOGIC: Op. mode t output118					045 213
0: Without timer stage					
LOGIC: Op. mode t output119					045 217
0: Without timer stage					
LOGIC: Op. mode t output120					045 221
0: Without timer stage					
LOGIC: Op. mode t output121					045 225
0: Without timer stage					
LOGIC: Op. mode t output122					045 229
0: Without timer stage					
LOGIC: Op. mode t output123					045 233
0: Without timer stage					
LOGIC: Op. mode t output124					045 237
0: Without timer stage					
LOGIC: Op. mode t output125					045 241
0: Without timer stage					
LOGIC: Op. mode t output126					045 245
0: Without timer stage					

Parameter							Address
Default	Min	Max	Unit			Logic Diagram	
LOGIC: Op. mode t output127							045 249
0: Without timer stage							
LOGIC: Op. mode t output128							045 253
0: Without timer stage							
These settings define the operating modes for the output timer stages.							
LOGIC: Time t1 output 1							030 002
0.00	0.00	600.00	s	Fig. 3-187, (p. 3-236)			
LOGIC: Time t1 output 2							030 006
0.00	0.00	600.00	s				
LOGIC: Time t1 output 3							030 010
0.00	0.00	600.00	s				
LOGIC: Time t1 output 4							030 014
0.00	0.00	600.00	s				
LOGIC: Time t1 output 5							030 018
0.00	0.00	600.00	s				
LOGIC: Time t1 output 6							030 022
0.00	0.00	600.00	s				
LOGIC: Time t1 output 7							030 026
0.00	0.00	600.00	s				
LOGIC: Time t1 output 8							030 030
0.00	0.00	600.00	s				
LOGIC: Time t1 output 9							030 034
0.00	0.00	600.00	s				
LOGIC: Time t1 output 10							030 038
0.00	0.00	600.00	s				
LOGIC: Time t1 output 11							030 042
0.00	0.00	600.00	s				
LOGIC: Time t1 output 12							030 046
0.00	0.00	600.00	s				
LOGIC: Time t1 output 13							030 050
0.00	0.00	600.00	s				
LOGIC: Time t1 output 14							030 054
0.00	0.00	600.00	s				
LOGIC: Time t1 output 15							030 058
0.00	0.00	600.00	s				
LOGIC: Time t1 output 16							030 062
0.00	0.00	600.00	s				

Parameter							Address
Default	Min	Max	Unit				Logic Diagram
LOGIC: Time t1 output 17							030 066
0.00	0.00	600.00	s				
LOGIC: Time t1 output 18							030 070
0.00	0.00	600.00	s				
LOGIC: Time t1 output 19							030 074
0.00	0.00	600.00	s				
LOGIC: Time t1 output 20							030 078
0.00	0.00	600.00	s				
LOGIC: Time t1 output 21							030 082
0.00	0.00	600.00	s				
LOGIC: Time t1 output 22							030 086
0.00	0.00	600.00	s				
LOGIC: Time t1 output 23							030 090
0.00	0.00	600.00	s				
LOGIC: Time t1 output 24							030 094
0.00	0.00	600.00	s				
LOGIC: Time t1 output 25							030 098
0.00	0.00	600.00	s				
LOGIC: Time t1 output 26							031 002
0.00	0.00	600.00	s				
LOGIC: Time t1 output 27							031 006
0.00	0.00	600.00	s				
LOGIC: Time t1 output 28							031 010
0.00	0.00	600.00	s				
LOGIC: Time t1 output 29							031 014
0.00	0.00	600.00	s				
LOGIC: Time t1 output 30							031 018
0.00	0.00	600.00	s				
LOGIC: Time t1 output 31							031 022
0.00	0.00	600.00	s				
LOGIC: Time t1 output 32							031 026
0.00	0.00	600.00	s				
LOGIC: Time t1 output 33							030 102
0.00	0.00	600.00	s				
LOGIC: Time t1 output 34							030 106
0.00	0.00	600.00	s				
LOGIC: Time t1 output 35							030 110
0.00	0.00	600.00	s				

Parameter							Address
Default	Min	Max	Unit			Logic Diagram	
LOGIC: Time t1 output 36							030 114
0.00	0.00	600.00	s				
LOGIC: Time t1 output 37							030 118
0.00	0.00	600.00	s				
LOGIC: Time t1 output 38							030 122
0.00	0.00	600.00	s				
LOGIC: Time t1 output 39							030 126
0.00	0.00	600.00	s				
LOGIC: Time t1 output 40							030 130
0.00	0.00	600.00	s				
LOGIC: Time t1 output 41							030 134
0.00	0.00	600.00	s				
LOGIC: Time t1 output 42							030 138
0.00	0.00	600.00	s				
LOGIC: Time t1 output 43							030 142
0.00	0.00	600.00	s				
LOGIC: Time t1 output 44							030 146
0.00	0.00	600.00	s				
LOGIC: Time t1 output 45							030 150
0.00	0.00	600.00	s				
LOGIC: Time t1 output 46							030 154
0.00	0.00	600.00	s				
LOGIC: Time t1 output 47							030 158
0.00	0.00	600.00	s				
LOGIC: Time t1 output 48							030 162
0.00	0.00	600.00	s				
LOGIC: Time t1 output 49							030 166
0.00	0.00	600.00	s				
LOGIC: Time t1 output 50							030 170
0.00	0.00	600.00	s				
LOGIC: Time t1 output 51							030 174
0.00	0.00	600.00	s				
LOGIC: Time t1 output 52							030 178
0.00	0.00	600.00	s				
LOGIC: Time t1 output 53							030 182
0.00	0.00	600.00	s				
LOGIC: Time t1 output 54							030 186
0.00	0.00	600.00	s				

Parameter							Address
Default	Min	Max	Unit				Logic Diagram
LOGIC: Time t1 output 55							030 190
0.00	0.00	600.00	s				
LOGIC: Time t1 output 56							030 194
0.00	0.00	600.00	s				
LOGIC: Time t1 output 57							030 198
0.00	0.00	600.00	s				
LOGIC: Time t1 output 58							030 202
0.00	0.00	600.00	s				
LOGIC: Time t1 output 59							030 206
0.00	0.00	600.00	s				
LOGIC: Time t1 output 60							030 210
0.00	0.00	600.00	s				
LOGIC: Time t1 output 61							030 214
0.00	0.00	600.00	s				
LOGIC: Time t1 output 62							030 218
0.00	0.00	600.00	s				
LOGIC: Time t1 output 63							030 222
0.00	0.00	600.00	s				
LOGIC: Time t1 output 64							030 226
0.00	0.00	600.00	s				
LOGIC: Time t1 output 65							046 002
0.00	0.00	600.00	s				
LOGIC: Time t1 output 66							045 006
0.00	0.00	600.00	s				
LOGIC: Time t1 output 67							045 010
0.00	0.00	600.00	s				
LOGIC: Time t1 output 68							045 014
0.00	0.00	600.00	s				
LOGIC: Time t1 output 69							045 018
0.00	0.00	600.00	s				
LOGIC: Time t1 output 70							045 022
0.00	0.00	600.00	s				
LOGIC: Time t1 output 71							045 026
0.00	0.00	600.00	s				
LOGIC: Time t1 output 72							045 030
0.00	0.00	600.00	s				
LOGIC: Time t1 output 73							045 034
0.00	0.00	600.00	s				

Parameter							Address
Default	Min	Max	Unit			Logic	Diagram
LOGIC: Time t1 output 74							045 038
0.00	0.00	600.00	s				
LOGIC: Time t1 output 75							045 042
0.00	0.00	600.00	s				
LOGIC: Time t1 output 76							045 046
0.00	0.00	600.00	s				
LOGIC: Time t1 output 77							045 050
0.00	0.00	600.00	s				
LOGIC: Time t1 output 78							045 054
0.00	0.00	600.00	s				
LOGIC: Time t1 output 79							045 058
0.00	0.00	600.00	s				
LOGIC: Time t1 output 80							045 062
0.00	0.00	600.00	s				
LOGIC: Time t1 output 81							045 066
0.00	0.00	600.00	s				
LOGIC: Time t1 output 82							045 070
0.00	0.00	600.00	s				
LOGIC: Time t1 output 83							045 074
0.00	0.00	600.00	s				
LOGIC: Time t1 output 84							045 078
0.00	0.00	600.00	s				
LOGIC: Time t1 output 85							045 082
0.00	0.00	600.00	s				
LOGIC: Time t1 output 86							045 086
0.00	0.00	600.00	s				
LOGIC: Time t1 output 87							045 090
0.00	0.00	600.00	s				
LOGIC: Time t1 output 88							045 094
0.00	0.00	600.00	s				
LOGIC: Time t1 output 89							045 098
0.00	0.00	600.00	s				
LOGIC: Time t1 output 90							045 102
0.00	0.00	600.00	s				
LOGIC: Time t1 output 91							045 106
0.00	0.00	600.00	s				
LOGIC: Time t1 output 92							045 110
0.00	0.00	600.00	s				

Parameter							Address
Default	Min	Max	Unit				Logic Diagram
LOGIC: Time t1 output 93							045 114
0.00	0.00	600.00	s				
LOGIC: Time t1 output 94							045 118
0.00	0.00	600.00	s				
LOGIC: Time t1 output 95							045 122
0.00	0.00	600.00	s				
LOGIC: Time t1 output 96							045 126
0.00	0.00	600.00	s				
LOGIC: Time t1 output 97							045 130
0.00	0.00	600.00	s				
LOGIC: Time t1 output 98							045 134
0.00	0.00	600.00	s				
LOGIC: Time t1 output 99							045 138
0.00	0.00	600.00	s				
LOGIC: Time t1 output100							045 142
0.00	0.00	600.00	s				
LOGIC: Time t1 output101							045 146
0.00	0.00	600.00	s				
LOGIC: Time t1 output102							045 150
0.00	0.00	600.00	s				
LOGIC: Time t1 output103							045 154
0.00	0.00	600.00	s				
LOGIC: Time t1 output104							045 158
0.00	0.00	600.00	s				
LOGIC: Time t1 output105							045 162
0.00	0.00	600.00	s				
LOGIC: Time t1 output106							045 166
0.00	0.00	600.00	s				
LOGIC: Time t1 output107							045 170
0.00	0.00	600.00	s				
LOGIC: Time t1 output108							045 174
0.00	0.00	600.00	s				
LOGIC: Time t1 output109							045 178
0.00	0.00	600.00	s				
LOGIC: Time t1 output110							045 182
0.00	0.00	600.00	s				
LOGIC: Time t1 output111							045 186
0.00	0.00	600.00	s				

Parameter							Address
Default	Min	Max	Unit			Logic Diagram	
LOGIC: Time t1 output112							045 190
0.00	0.00	600.00	s				
LOGIC: Time t1 output113							045 194
0.00	0.00	600.00	s				
LOGIC: Time t1 output114							045 198
0.00	0.00	600.00	s				
LOGIC: Time t1 output115							045 202
0.00	0.00	600.00	s				
LOGIC: Time t1 output116							045 206
0.00	0.00	600.00	s				
LOGIC: Time t1 output117							045 210
0.00	0.00	600.00	s				
LOGIC: Time t1 output118							045 214
0.00	0.00	600.00	s				
LOGIC: Time t1 output119							045 218
0.00	0.00	600.00	s				
LOGIC: Time t1 output120							045 222
0.00	0.00	600.00	s				
LOGIC: Time t1 output121							045 226
0.00	0.00	600.00	s				
LOGIC: Time t1 output122							045 230
0.00	0.00	600.00	s				
LOGIC: Time t1 output123							045 234
0.00	0.00	600.00	s				
LOGIC: Time t1 output124							045 238
0.00	0.00	600.00	s				
LOGIC: Time t1 output125							045 242
0.00	0.00	600.00	s				
LOGIC: Time t1 output126							045 246
0.00	0.00	600.00	s				
LOGIC: Time t1 output127							045 250
0.00	0.00	600.00	s				
LOGIC: Time t1 output128							045 254
0.00	0.00	600.00	s				
Settings of timer stage t1 for the respective outputs.							
LOGIC: Time t2 output 1							030 003
0.00	0.00	600.00	s	Fig. 3-187, (p. 3-236)			

Parameter							Address
Default	Min	Max	Unit				Logic Diagram
LOGIC: Time t2 output 2							030 007
0.00	0.00	600.00	s				
LOGIC: Time t2 output 3							030 011
0.00	0.00	600.00	s				
LOGIC: Time t2 output 4							030 015
0.00	0.00	600.00	s				
LOGIC: Time t2 output 5							030 019
0.00	0.00	600.00	s				
LOGIC: Time t2 output 6							030 023
0.00	0.00	600.00	s				
LOGIC: Time t2 output 7							030 027
0.00	0.00	600.00	s				
LOGIC: Time t2 output 8							030 031
0.00	0.00	600.00	s				
LOGIC: Time t2 output 9							030 035
0.00	0.00	600.00	s				
LOGIC: Time t2 output 10							030 039
0.00	0.00	600.00	s				
LOGIC: Time t2 output 11							030 043
0.00	0.00	600.00	s				
LOGIC: Time t2 output 12							030 047
0.00	0.00	600.00	s				
LOGIC: Time t2 output 13							030 051
0.00	0.00	600.00	s				
LOGIC: Time t2 output 14							030 055
0.00	0.00	600.00	s				
LOGIC: Time t2 output 15							030 059
0.00	0.00	600.00	s				
LOGIC: Time t2 output 16							030 063
0.00	0.00	600.00	s				
LOGIC: Time t2 output 17							030 067
0.00	0.00	600.00	s				
LOGIC: Time t2 output 18							030 071
0.00	0.00	600.00	s				
LOGIC: Time t2 output 19							030 075
0.00	0.00	600.00	s				
LOGIC: Time t2 output 20							030 079
0.00	0.00	600.00	s				

Parameter							Address
Default	Min	Max	Unit			Logic	Diagram
LOGIC: Time t2 output 21							030 083
0.00	0.00	600.00	s				
LOGIC: Time t2 output 22							030 087
0.00	0.00	600.00	s				
LOGIC: Time t2 output 23							030 091
0.00	0.00	600.00	s				
LOGIC: Time t2 output 24							030 095
0.00	0.00	600.00	s				
LOGIC: Time t2 output 25							030 099
0.00	0.00	600.00	s				
LOGIC: Time t2 output 26							031 003
0.00	0.00	600.00	s				
LOGIC: Time t2 output 27							031 007
0.00	0.00	600.00	s				
LOGIC: Time t2 output 28							031 011
0.00	0.00	600.00	s				
LOGIC: Time t2 output 29							031 015
0.00	0.00	600.00	s				
LOGIC: Time t2 output 30							031 019
0.00	0.00	600.00	s				
LOGIC: Time t2 output 31							031 023
0.00	0.00	600.00	s				
LOGIC: Time t2 output 32							031 027
0.00	0.00	600.00	s				
LOGIC: Time t2 output 33							030 103
0.00	0.00	600.00	s				
LOGIC: Time t2 output 34							030 107
0.00	0.00	600.00	s				
LOGIC: Time t2 output 35							030 111
0.00	0.00	600.00	s				
LOGIC: Time t2 output 36							030 115
0.00	0.00	600.00	s				
LOGIC: Time t2 output 37							030 119
0.00	0.00	600.00	s				
LOGIC: Time t2 output 38							030 123
0.00	0.00	600.00	s				
LOGIC: Time t2 output 39							030 127
0.00	0.00	600.00	s				

Parameter							Address
Default	Min	Max	Unit				Logic Diagram
LOGIC: Time t2 output 40							030 131
0.00	0.00	600.00	s				
LOGIC: Time t2 output 41							030 135
0.00	0.00	600.00	s				
LOGIC: Time t2 output 42							030 139
0.00	0.00	600.00	s				
LOGIC: Time t2 output 43							030 143
0.00	0.00	600.00	s				
LOGIC: Time t2 output 44							030 147
0.00	0.00	600.00	s				
LOGIC: Time t2 output 45							030 151
0.00	0.00	600.00	s				
LOGIC: Time t2 output 46							030 155
0.00	0.00	600.00	s				
LOGIC: Time t2 output 47							030 159
0.00	0.00	600.00	s				
LOGIC: Time t2 output 48							030 163
0.00	0.00	600.00	s				
LOGIC: Time t2 output 49							030 167
0.00	0.00	600.00	s				
LOGIC: Time t2 output 50							030 171
0.00	0.00	600.00	s				
LOGIC: Time t2 output 51							030 175
0.00	0.00	600.00	s				
LOGIC: Time t2 output 52							030 179
0.00	0.00	600.00	s				
LOGIC: Time t2 output 53							030 183
0.00	0.00	600.00	s				
LOGIC: Time t2 output 54							030 187
0.00	0.00	600.00	s				
LOGIC: Time t2 output 55							030 191
0.00	0.00	600.00	s				
LOGIC: Time t2 output 56							030 195
0.00	0.00	600.00	s				
LOGIC: Time t2 output 57							030 199
0.00	0.00	600.00	s				
LOGIC: Time t2 output 58							030 203
0.00	0.00	600.00	s				

Parameter							Address
Default	Min	Max	Unit			Logic Diagram	
LOGIC: Time t2 output 59							030 207
0.00	0.00	600.00	s				
LOGIC: Time t2 output 60							030 211
0.00	0.00	600.00	s				
LOGIC: Time t2 output 61							030 215
0.00	0.00	600.00	s				
LOGIC: Time t2 output 62							030 219
0.00	0.00	600.00	s				
LOGIC: Time t2 output 63							030 223
0.00	0.00	600.00	s				
LOGIC: Time t2 output 64							030 227
0.00	0.00	600.00	s				
LOGIC: Time t2 output 65							046 003
0.00	0.00	600.00	s				
LOGIC: Time t2 output 66							045 007
0.00	0.00	600.00	s				
LOGIC: Time t2 output 67							045 011
0.00	0.00	600.00	s				
LOGIC: Time t2 output 68							045 015
0.00	0.00	600.00	s				
LOGIC: Time t2 output 69							045 019
0.00	0.00	600.00	s				
LOGIC: Time t2 output 70							045 023
0.00	0.00	600.00	s				
LOGIC: Time t2 output 71							045 027
0.00	0.00	600.00	s				
LOGIC: Time t2 output 72							045 031
0.00	0.00	600.00	s				
LOGIC: Time t2 output 73							045 035
0.00	0.00	600.00	s				
LOGIC: Time t2 output 74							045 039
0.00	0.00	600.00	s				
LOGIC: Time t2 output 75							045 043
0.00	0.00	600.00	s				
LOGIC: Time t2 output 76							045 047
0.00	0.00	600.00	s				
LOGIC: Time t2 output 77							045 051
0.00	0.00	600.00	s				

Parameter							Address
Default	Min	Max	Unit				Logic Diagram
LOGIC: Time t2 output 78							045 055
0.00	0.00	600.00	s				
LOGIC: Time t2 output 79							045 059
0.00	0.00	600.00	s				
LOGIC: Time t2 output 80							045 063
0.00	0.00	600.00	s				
LOGIC: Time t2 output 81							045 067
0.00	0.00	600.00	s				
LOGIC: Time t2 output 82							045 071
0.00	0.00	600.00	s				
LOGIC: Time t2 output 83							045 075
0.00	0.00	600.00	s				
LOGIC: Time t2 output 84							045 079
0.00	0.00	600.00	s				
LOGIC: Time t2 output 85							045 083
0.00	0.00	600.00	s				
LOGIC: Time t2 output 86							045 087
0.00	0.00	600.00	s				
LOGIC: Time t2 output 87							045 091
0.00	0.00	600.00	s				
LOGIC: Time t2 output 88							045 095
0.00	0.00	600.00	s				
LOGIC: Time t2 output 89							045 099
0.00	0.00	600.00	s				
LOGIC: Time t2 output 90							045 103
0.00	0.00	600.00	s				
LOGIC: Time t2 output 91							045 107
0.00	0.00	600.00	s				
LOGIC: Time t2 output 92							045 111
0.00	0.00	600.00	s				
LOGIC: Time t2 output 93							045 115
0.00	0.00	600.00	s				
LOGIC: Time t2 output 94							045 119
0.00	0.00	600.00	s				
LOGIC: Time t2 output 95							045 123
0.00	0.00	600.00	s				
LOGIC: Time t2 output 96							045 127
0.00	0.00	600.00	s				

Parameter							Address
Default	Min	Max	Unit			Logic Diagram	
LOGIC: Time t2 output 97							045 131
0.00	0.00	600.00	s				
LOGIC: Time t2 output 98							045 135
0.00	0.00	600.00	s				
LOGIC: Time t2 output 99							045 139
0.00	0.00	600.00	s				
LOGIC: Time t2 output100							045 143
0.00	0.00	600.00	s				
LOGIC: Time t2 output101							045 147
0.00	0.00	600.00	s				
LOGIC: Time t2 output102							045 151
0.00	0.00	600.00	s				
LOGIC: Time t2 output103							045 155
0.00	0.00	600.00	s				
LOGIC: Time t2 output104							045 159
0.00	0.00	600.00	s				
LOGIC: Time t2 output105							045 163
0.00	0.00	600.00	s				
LOGIC: Time t2 output106							045 167
0.00	0.00	600.00	s				
LOGIC: Time t2 output107							045 171
0.00	0.00	600.00	s				
LOGIC: Time t2 output108							045 175
0.00	0.00	600.00	s				
LOGIC: Time t2 output109							045 179
0.00	0.00	600.00	s				
LOGIC: Time t2 output110							045 183
0.00	0.00	600.00	s				
LOGIC: Time t2 output111							045 187
0.00	0.00	600.00	s				
LOGIC: Time t2 output112							045 191
0.00	0.00	600.00	s				
LOGIC: Time t2 output113							045 195
0.00	0.00	600.00	s				
LOGIC: Time t2 output114							045 199
0.00	0.00	600.00	s				
LOGIC: Time t2 output115							045 203
0.00	0.00	600.00	s				

Parameter							Address
Default	Min	Max	Unit				Logic Diagram
LOGIC: Time t2 output116							045 207
0.00	0.00	600.00	s				
LOGIC: Time t2 output117							045 211
0.00	0.00	600.00	s				
LOGIC: Time t2 output118							045 215
0.00	0.00	600.00	s				
LOGIC: Time t2 output119							045 219
0.00	0.00	600.00	s				
LOGIC: Time t2 output120							045 223
0.00	0.00	600.00	s				
LOGIC: Time t2 output121							045 227
0.00	0.00	600.00	s				
LOGIC: Time t2 output122							045 231
0.00	0.00	600.00	s				
LOGIC: Time t2 output123							045 235
0.00	0.00	600.00	s				
LOGIC: Time t2 output124							045 239
0.00	0.00	600.00	s				
LOGIC: Time t2 output125							045 243
0.00	0.00	600.00	s				
LOGIC: Time t2 output126							045 247
0.00	0.00	600.00	s				
LOGIC: Time t2 output127							045 251
0.00	0.00	600.00	s				
LOGIC: Time t2 output128							045 255
0.00	0.00	600.00	s				
Settings for timer stage t2 for the respective outputs. **Note:** This setting has no effect in the “minimum time” operating mode.							
LOGIC: Sig.assig. outp. 1							044 000
061 000: MAIN: Without function				Fig. 3-194, (p. 3-241)			
LOGIC: Sig.assig. outp. 2							044 002
061 000: MAIN: Without function							
LOGIC: Sig.assig. outp. 3							044 004
061 000: MAIN: Without function							
LOGIC: Sig.assig. outp. 4							044 006
061 000: MAIN: Without function							
LOGIC: Sig.assig. outp. 5							044 008
061 000: MAIN: Without function							

Parameter						Address
Default	Min	Max	Unit		Logic Diagram	
LOGIC: Sig.assig. outp. 6						044 010
061 000: MAIN: Without function						
LOGIC: Sig.assig. outp. 7						044 012
061 000: MAIN: Without function						
LOGIC: Sig.assig. outp. 8						044 014
061 000: MAIN: Without function						
LOGIC: Sig.assig. outp. 9						044 016
061 000: MAIN: Without function						
LOGIC: Sig.assig. outp. 10						044 018
061 000: MAIN: Without function						
LOGIC: Sig.assig. outp. 11						044 020
061 000: MAIN: Without function						
LOGIC: Sig.assig. outp. 12						044 022
061 000: MAIN: Without function						
LOGIC: Sig.assig. outp. 13						044 024
061 000: MAIN: Without function						
LOGIC: Sig.assig. outp. 14						044 026
061 000: MAIN: Without function						
LOGIC: Sig.assig. outp. 15						044 028
061 000: MAIN: Without function						
LOGIC: Sig.assig. outp. 16						044 030
061 000: MAIN: Without function						
LOGIC: Sig.assig. outp. 17						044 032
061 000: MAIN: Without function						
LOGIC: Sig.assig. outp. 18						044 034
061 000: MAIN: Without function						
LOGIC: Sig.assig. outp. 19						044 036
061 000: MAIN: Without function						
LOGIC: Sig.assig. outp. 20						044 038
061 000: MAIN: Without function						
LOGIC: Sig.assig. outp. 21						044 040
061 000: MAIN: Without function						
LOGIC: Sig.assig. outp. 22						044 042
061 000: MAIN: Without function						
LOGIC: Sig.assig. outp. 23						044 044
061 000: MAIN: Without function						
LOGIC: Sig.assig. outp. 24						044 046
061 000: MAIN: Without function						

Parameter						Address
Default	Min	Max	Unit			Logic Diagram
LOGIC: Sig.assig. outp. 25						044 048
061 000: MAIN: Without function						
LOGIC: Sig.assig. outp. 26						044 050
061 000: MAIN: Without function						
LOGIC: Sig.assig. outp. 27						044 052
061 000: MAIN: Without function						
LOGIC: Sig.assig. outp. 28						044 054
061 000: MAIN: Without function						
LOGIC: Sig.assig. outp. 29						044 056
061 000: MAIN: Without function						
LOGIC: Sig.assig. outp. 30						044 058
061 000: MAIN: Without function						
LOGIC: Sig.assig. outp. 31						044 060
061 000: MAIN: Without function						
LOGIC: Sig.assig. outp. 32						044 062
061 000: MAIN: Without function						
LOGIC: Sig.assig. outp. 33						044 064
061 000: MAIN: Without function						
LOGIC: Sig.assig. outp. 34						044 066
061 000: MAIN: Without function						
LOGIC: Sig.assig. outp. 35						044 068
061 000: MAIN: Without function						
LOGIC: Sig.assig. outp. 36						044 070
061 000: MAIN: Without function						
LOGIC: Sig.assig. outp. 37						044 072
061 000: MAIN: Without function						
LOGIC: Sig.assig. outp. 38						044 074
061 000: MAIN: Without function						
LOGIC: Sig.assig. outp. 39						044 076
061 000: MAIN: Without function						
LOGIC: Sig.assig. outp. 40						044 078
061 000: MAIN: Without function						
LOGIC: Sig.assig. outp. 41						044 080
061 000: MAIN: Without function						
LOGIC: Sig.assig. outp. 42						044 082
061 000: MAIN: Without function						
LOGIC: Sig.assig. outp. 43						044 084
061 000: MAIN: Without function						

Parameter						Address
Default	Min	Max	Unit			Logic Diagram
LOGIC: Sig.assig. outp. 44						044 086
061 000: MAIN: Without function						
LOGIC: Sig.assig. outp. 45						044 088
061 000: MAIN: Without function						
LOGIC: Sig.assig. outp. 46						044 090
061 000: MAIN: Without function						
LOGIC: Sig.assig. outp. 47						044 092
061 000: MAIN: Without function						
LOGIC: Sig.assig. outp. 48						044 094
061 000: MAIN: Without function						
LOGIC: Sig.assig. outp. 49						044 096
061 000: MAIN: Without function						
LOGIC: Sig.assig. outp. 50						044 098
061 000: MAIN: Without function						
LOGIC: Sig.assig. outp. 51						044 100
061 000: MAIN: Without function						
LOGIC: Sig.assig. outp. 52						044 102
061 000: MAIN: Without function						
LOGIC: Sig.assig. outp. 53						044 104
061 000: MAIN: Without function						
LOGIC: Sig.assig. outp. 54						044 106
061 000: MAIN: Without function						
LOGIC: Sig.assig. outp. 55						044 108
061 000: MAIN: Without function						
LOGIC: Sig.assig. outp. 56						044 110
061 000: MAIN: Without function						
LOGIC: Sig.assig. outp. 57						044 112
061 000: MAIN: Without function						
LOGIC: Sig.assig. outp. 58						044 114
061 000: MAIN: Without function						
LOGIC: Sig.assig. outp. 59						044 116
061 000: MAIN: Without function						
LOGIC: Sig.assig. outp. 60						044 118
061 000: MAIN: Without function						
LOGIC: Sig.assig. outp. 61						044 120
061 000: MAIN: Without function						
LOGIC: Sig.assig. outp. 62						044 122
061 000: MAIN: Without function						

Parameter						Address
Default	Min	Max	Unit			Logic Diagram
LOGIC: Sig.assig. outp. 63						044 124
061 000: MAIN: Without function						
LOGIC: Sig.assig. outp. 64						044 126
061 000: MAIN: Without function						
LOGIC: Sig.assig. outp. 65						048 128
061 000: MAIN: Without function						
LOGIC: Sig.assig. outp. 66						048 002
061 000: MAIN: Without function						
LOGIC: Sig.assig. outp. 67						048 004
061 000: MAIN: Without function						
LOGIC: Sig.assig. outp. 68						048 006
061 000: MAIN: Without function						
LOGIC: Sig.assig. outp. 69						048 008
061 000: MAIN: Without function						
LOGIC: Sig.assig. outp. 70						048 010
061 000: MAIN: Without function						
LOGIC: Sig.assig. outp. 71						048 012
061 000: MAIN: Without function						
LOGIC: Sig.assig. outp. 72						048 014
061 000: MAIN: Without function						
LOGIC: Sig.assig. outp. 73						048 016
061 000: MAIN: Without function						
LOGIC: Sig.assig. outp. 74						048 018
061 000: MAIN: Without function						
LOGIC: Sig.assig. outp. 75						048 020
061 000: MAIN: Without function						
LOGIC: Sig.assig. outp. 76						048 022
061 000: MAIN: Without function						
LOGIC: Sig.assig. outp. 77						048 024
061 000: MAIN: Without function						
LOGIC: Sig.assig. outp. 78						048 026
061 000: MAIN: Without function						
LOGIC: Sig.assig. outp. 79						048 028
061 000: MAIN: Without function						
LOGIC: Sig.assig. outp. 80						048 030
061 000: MAIN: Without function						
LOGIC: Sig.assig. outp. 81						048 032
061 000: MAIN: Without function						

Parameter						Address
Default	Min	Max	Unit		Logic Diagram	
LOGIC: Sig.assig. outp. 82						048 034
061 000: MAIN: Without function						
LOGIC: Sig.assig. outp. 83						048 036
061 000: MAIN: Without function						
LOGIC: Sig.assig. outp. 84						048 038
061 000: MAIN: Without function						
LOGIC: Sig.assig. outp. 85						048 040
061 000: MAIN: Without function						
LOGIC: Sig.assig. outp. 86						048 042
061 000: MAIN: Without function						
LOGIC: Sig.assig. outp. 87						048 044
061 000: MAIN: Without function						
LOGIC: Sig.assig. outp. 88						048 046
061 000: MAIN: Without function						
LOGIC: Sig.assig. outp. 89						048 048
061 000: MAIN: Without function						
LOGIC: Sig.assig. outp. 90						048 050
061 000: MAIN: Without function						
LOGIC: Sig.assig. outp. 91						048 052
061 000: MAIN: Without function						
LOGIC: Sig.assig. outp. 92						048 054
061 000: MAIN: Without function						
LOGIC: Sig.assig. outp. 93						048 056
061 000: MAIN: Without function						
LOGIC: Sig.assig. outp. 94						048 058
061 000: MAIN: Without function						
LOGIC: Sig.assig. outp. 95						048 060
061 000: MAIN: Without function						
LOGIC: Sig.assig. outp. 96						048 062
061 000: MAIN: Without function						
LOGIC: Sig.assig. outp. 97						048 064
061 000: MAIN: Without function						
LOGIC: Sig.assig. outp. 98						048 066
061 000: MAIN: Without function						
LOGIC: Sig.assig. outp. 99						048 068
061 000: MAIN: Without function						
LOGIC: Sig.assig. outp.100						048 070
061 000: MAIN: Without function						

Parameter						Address
Default	Min	Max	Unit			Logic Diagram
LOGIC: Sig.assig. outp.101						048 072
061 000: MAIN: Without function						
LOGIC: Sig.assig. outp.102						048 074
061 000: MAIN: Without function						
LOGIC: Sig.assig. outp.103						048 076
061 000: MAIN: Without function						
LOGIC: Sig.assig. outp.104						048 078
061 000: MAIN: Without function						
LOGIC: Sig.assig. outp.105						048 080
061 000: MAIN: Without function						
LOGIC: Sig.assig. outp.106						048 082
061 000: MAIN: Without function						
LOGIC: Sig.assig. outp.107						048 084
061 000: MAIN: Without function						
LOGIC: Sig.assig. outp.108						048 086
061 000: MAIN: Without function						
LOGIC: Sig.assig. outp.109						048 088
061 000: MAIN: Without function						
LOGIC: Sig.assig. outp.110						048 090
061 000: MAIN: Without function						
LOGIC: Sig.assig. outp.111						048 092
061 000: MAIN: Without function						
LOGIC: Sig.assig. outp.112						048 094
061 000: MAIN: Without function						
LOGIC: Sig.assig. outp.113						048 096
061 000: MAIN: Without function						
LOGIC: Sig.assig. outp.114						048 098
061 000: MAIN: Without function						
LOGIC: Sig.assig. outp.115						048 100
061 000: MAIN: Without function						
LOGIC: Sig.assig. outp.116						048 102
061 000: MAIN: Without function						
LOGIC: Sig.assig. outp.117						048 104
061 000: MAIN: Without function						
LOGIC: Sig.assig. outp.118						048 106
061 000: MAIN: Without function						
LOGIC: Sig.assig. outp.119						048 108
061 000: MAIN: Without function						

Parameter						Address
Default	Min	Max	Unit		Logic Diagram	
LOGIC: Sig.assig. outp.120						048 110
061 000: MAIN: Without function						
LOGIC: Sig.assig. outp.121						048 112
061 000: MAIN: Without function						
LOGIC: Sig.assig. outp.122						048 114
061 000: MAIN: Without function						
LOGIC: Sig.assig. outp.123						048 116
061 000: MAIN: Without function						
LOGIC: Sig.assig. outp.124						048 118
061 000: MAIN: Without function						
LOGIC: Sig.assig. outp.125						048 120
061 000: MAIN: Without function						
LOGIC: Sig.assig. outp.126						048 122
061 000: MAIN: Without function						
LOGIC: Sig.assig. outp.127						048 124
061 000: MAIN: Without function						
LOGIC: Sig.assig. outp.128						048 126
061 000: MAIN: Without function						
These settings assign the function of a binary input signal to the output of the logic equation.						
LOGIC: Sig.assig.outp. 1(t)						044 001
061 000: MAIN: Without function				Fig. 3-194, (p. 3-241)		
LOGIC: Sig.assig.outp. 2(t)						044 003
061 000: MAIN: Without function						
LOGIC: Sig.assig.outp. 3(t)						044 005
061 000: MAIN: Without function						
LOGIC: Sig.assig.outp. 4(t)						044 007
061 000: MAIN: Without function						
LOGIC: Sig.assig.outp. 5(t)						044 009
061 000: MAIN: Without function						
LOGIC: Sig.assig.outp. 6(t)						044 011
061 000: MAIN: Without function						
LOGIC: Sig.assig.outp. 7(t)						044 013
061 000: MAIN: Without function						
LOGIC: Sig.assig.outp. 8(t)						044 015
061 000: MAIN: Without function						
LOGIC: Sig.assig.outp. 9(t)						044 017
061 000: MAIN: Without function						

Parameter					Address
Default	Min	Max	Unit		Logic Diagram
LOGIC: Sig.assig.outp.10(t)					044 019
061 000: MAIN: Without function					
LOGIC: Sig.assig.outp.11(t)					044 021
061 000: MAIN: Without function					
LOGIC: Sig.assig.outp.12(t)					044 023
061 000: MAIN: Without function					
LOGIC: Sig.assig.outp.13(t)					044 025
061 000: MAIN: Without function					
LOGIC: Sig.assig.outp.14(t)					044 027
061 000: MAIN: Without function					
LOGIC: Sig.assig.outp.15(t)					044 029
061 000: MAIN: Without function					
LOGIC: Sig.assig.outp.16(t)					044 031
061 000: MAIN: Without function					
LOGIC: Sig.assig.outp.17(t)					044 033
061 000: MAIN: Without function					
LOGIC: Sig.assig.outp.18(t)					044 035
061 000: MAIN: Without function					
LOGIC: Sig.assig.outp.19(t)					044 037
061 000: MAIN: Without function					
LOGIC: Sig.assig.outp.20(t)					044 039
061 000: MAIN: Without function					
LOGIC: Sig.assig.outp.21(t)					044 041
061 000: MAIN: Without function					
LOGIC: Sig.assig.outp.22(t)					044 043
061 000: MAIN: Without function					
LOGIC: Sig.assig.outp.23(t)					044 045
061 000: MAIN: Without function					
LOGIC: Sig.assig.outp.24(t)					044 047
061 000: MAIN: Without function					
LOGIC: Sig.assig.outp.25(t)					044 049
061 000: MAIN: Without function					
LOGIC: Sig.assig.outp.26(t)					044 051
061 000: MAIN: Without function					
LOGIC: Sig.assig.outp.27(t)					044 053
061 000: MAIN: Without function					
LOGIC: Sig.assig.outp.28(t)					044 055
061 000: MAIN: Without function					

Parameter						Address
Default	Min	Max	Unit		Logic Diagram	
LOGIC: Sig.assig.outp.29(t)						044 057
061 000: MAIN: Without function						
LOGIC: Sig.assig.outp.30(t)						044 059
061 000: MAIN: Without function						
LOGIC: Sig.assig.outp.31(t)						044 061
061 000: MAIN: Without function						
LOGIC: Sig.assig.outp.32(t)						044 063
061 000: MAIN: Without function						
LOGIC: Sig.assig.outp.33(t)						044 065
061 000: MAIN: Without function						
LOGIC: Sig.assig.outp.34(t)						044 067
061 000: MAIN: Without function						
LOGIC: Sig.assig.outp.35(t)						044 069
061 000: MAIN: Without function						
LOGIC: Sig.assig.outp.36(t)						044 071
061 000: MAIN: Without function						
LOGIC: Sig.assig.outp.37(t)						044 073
061 000: MAIN: Without function						
LOGIC: Sig.assig.outp.38(t)						044 075
061 000: MAIN: Without function						
LOGIC: Sig.assig.outp.39(t)						044 077
061 000: MAIN: Without function						
LOGIC: Sig.assig.outp.40(t)						044 079
061 000: MAIN: Without function						
LOGIC: Sig.assig.outp.41(t)						044 081
061 000: MAIN: Without function						
LOGIC: Sig.assig.outp.42(t)						044 083
061 000: MAIN: Without function						
LOGIC: Sig.assig.outp.43(t)						044 085
061 000: MAIN: Without function						
LOGIC: Sig.assig.outp.44(t)						044 087
061 000: MAIN: Without function						
LOGIC: Sig.assig.outp.45(t)						044 089
061 000: MAIN: Without function						
LOGIC: Sig.assig.outp.46(t)						044 091
061 000: MAIN: Without function						
LOGIC: Sig.assig.outp.47(t)						044 093
061 000: MAIN: Without function						

Parameter					Address
Default	Min	Max	Unit		Logic Diagram
LOGIC: Sig.assig.outp.48(t)					044 095
061 000: MAIN: Without function					
LOGIC: Sig.assig.outp.49(t)					044 097
061 000: MAIN: Without function					
LOGIC: Sig.assig.outp.50(t)					044 099
061 000: MAIN: Without function					
LOGIC: Sig.assig.outp.51(t)					044 101
061 000: MAIN: Without function					
LOGIC: Sig.assig.outp.52(t)					044 103
061 000: MAIN: Without function					
LOGIC: Sig.assig.outp.53(t)					044 105
061 000: MAIN: Without function					
LOGIC: Sig.assig.outp.54(t)					044 107
061 000: MAIN: Without function					
LOGIC: Sig.assig.outp.55(t)					044 109
061 000: MAIN: Without function					
LOGIC: Sig.assig.outp.56(t)					044 111
061 000: MAIN: Without function					
LOGIC: Sig.assig.outp.57(t)					044 113
061 000: MAIN: Without function					
LOGIC: Sig.assig.outp.58(t)					044 115
061 000: MAIN: Without function					
LOGIC: Sig.assig.outp.59(t)					044 117
061 000: MAIN: Without function					
LOGIC: Sig.assig.outp.60(t)					044 119
061 000: MAIN: Without function					
LOGIC: Sig.assig.outp.61(t)					044 121
061 000: MAIN: Without function					
LOGIC: Sig.assig.outp.62(t)					044 123
061 000: MAIN: Without function					
LOGIC: Sig.assig.outp.63(t)					044 125
061 000: MAIN: Without function					
LOGIC: Sig.assig.outp.64(t)					044 127
061 000: MAIN: Without function					
LOGIC: Sig.assig.outp.65(t)					048 129
061 000: MAIN: Without function					
LOGIC: Sig.assig.outp.66(t)					048 003
061 000: MAIN: Without function					

Parameter						Address
Default	Min	Max	Unit			Logic Diagram
LOGIC: Sig.assig.outp.67(t)						048 005
061 000: MAIN: Without function						
LOGIC: Sig.assig.outp.68(t)						048 007
061 000: MAIN: Without function						
LOGIC: Sig.assig.outp.69(t)						048 009
061 000: MAIN: Without function						
LOGIC: Sig.assig.outp.70(t)						048 011
061 000: MAIN: Without function						
LOGIC: Sig.assig.outp.71(t)						048 013
061 000: MAIN: Without function						
LOGIC: Sig.assig.outp.72(t)						048 015
061 000: MAIN: Without function						
LOGIC: Sig.assig.outp.73(t)						048 017
061 000: MAIN: Without function						
LOGIC: Sig.assig.outp.74(t)						048 019
061 000: MAIN: Without function						
LOGIC: Sig.assig.outp.75(t)						048 021
061 000: MAIN: Without function						
LOGIC: Sig.assig.outp.76(t)						048 023
061 000: MAIN: Without function						
LOGIC: Sig.assig.outp.77(t)						048 025
061 000: MAIN: Without function						
LOGIC: Sig.assig.outp.78(t)						048 027
061 000: MAIN: Without function						
LOGIC: Sig.assig.outp.79(t)						048 029
061 000: MAIN: Without function						
LOGIC: Sig.assig.outp.80(t)						048 031
061 000: MAIN: Without function						
LOGIC: Sig.assig.outp.81(t)						048 033
061 000: MAIN: Without function						
LOGIC: Sig.assig.outp.82(t)						048 035
061 000: MAIN: Without function						
LOGIC: Sig.assig.outp.83(t)						048 037
061 000: MAIN: Without function						
LOGIC: Sig.assig.outp.84(t)						048 039
061 000: MAIN: Without function						
LOGIC: Sig.assig.outp.85(t)						048 041
061 000: MAIN: Without function						

Parameter					Address
Default	Min	Max	Unit		Logic Diagram
LOGIC: Sig.assig.outp.86(t)					048 043
061 000: MAIN: Without function					
LOGIC: Sig.assig.outp.87(t)					048 045
061 000: MAIN: Without function					
LOGIC: Sig.assig.outp.88(t)					048 047
061 000: MAIN: Without function					
LOGIC: Sig.assig.outp.89(t)					048 049
061 000: MAIN: Without function					
LOGIC: Sig.assig.outp.90(t)					048 051
061 000: MAIN: Without function					
LOGIC: Sig.assig.outp.91(t)					048 053
061 000: MAIN: Without function					
LOGIC: Sig.assig.outp.92(t)					048 055
061 000: MAIN: Without function					
LOGIC: Sig.assig.outp.93(t)					048 057
061 000: MAIN: Without function					
LOGIC: Sig.assig.outp.94(t)					048 059
061 000: MAIN: Without function					
LOGIC: Sig.assig.outp.95(t)					048 061
061 000: MAIN: Without function					
LOGIC: Sig.assig.outp.96(t)					048 063
061 000: MAIN: Without function					
LOGIC: Sig.assig.outp.97(t)					048 065
061 000: MAIN: Without function					
LOGIC: Sig.assig.outp.98(t)					048 067
061 000: MAIN: Without function					
LOGIC: Sig.assig.outp.99(t)					048 069
061 000: MAIN: Without function					
LOGIC: Sig.assig.outp100(t)					048 071
061 000: MAIN: Without function					
LOGIC: Sig.assig.outp101(t)					048 073
061 000: MAIN: Without function					
LOGIC: Sig.assig.outp102(t)					048 075
061 000: MAIN: Without function					
LOGIC: Sig.assig.outp103(t)					048 077
061 000: MAIN: Without function					
LOGIC: Sig.assig.outp104(t)					048 079
061 000: MAIN: Without function					

Parameter						Address
Default	Min	Max	Unit			Logic Diagram
LOGIC: Sig.assig.outp105(t)						048 081
061 000: MAIN: Without function						
LOGIC: Sig.assig.outp106(t)						048 083
061 000: MAIN: Without function						
LOGIC: Sig.assig.outp107(t)						048 085
061 000: MAIN: Without function						
LOGIC: Sig.assig.outp108(t)						048 087
061 000: MAIN: Without function						
LOGIC: Sig.assig.outp109(t)						048 089
061 000: MAIN: Without function						
LOGIC: Sig.assig.outp110(t)						048 091
061 000: MAIN: Without function						
LOGIC: Sig.assig.outp111(t)						048 093
061 000: MAIN: Without function						
LOGIC: Sig.assig.outp112(t)						048 095
061 000: MAIN: Without function						
LOGIC: Sig.assig.outp113(t)						048 097
061 000: MAIN: Without function						
LOGIC: Sig.assig.outp114(t)						048 099
061 000: MAIN: Without function						
LOGIC: Sig.assig.outp115(t)						048 101
061 000: MAIN: Without function						
LOGIC: Sig.assig.outp116(t)						048 103
061 000: MAIN: Without function						
LOGIC: Sig.assig.outp117(t)						048 105
061 000: MAIN: Without function						
LOGIC: Sig.assig.outp118(t)						048 107
061 000: MAIN: Without function						
LOGIC: Sig.assig.outp119(t)						048 109
061 000: MAIN: Without function						
LOGIC: Sig.assig.outp120(t)						048 111
061 000: MAIN: Without function						
LOGIC: Sig.assig.outp121(t)						048 113
061 000: MAIN: Without function						
LOGIC: Sig.assig.outp122(t)						048 115
061 000: MAIN: Without function						
LOGIC: Sig.assig.outp123(t)						048 117
061 000: MAIN: Without function						

Parameter					Address
Default	Min	Max	Unit		Logic Diagram
LOGIC: Sig.assig.outp124(t)					048 119
061 000: MAIN: Without function					
LOGIC: Sig.assig.outp125(t)					048 121
061 000: MAIN: Without function					
LOGIC: Sig.assig.outp126(t)					048 123
061 000: MAIN: Without function					
LOGIC: Sig.assig.outp127(t)					048 125
061 000: MAIN: Without function					
LOGIC: Sig.assig.outp128(t)					048 127
061 000: MAIN: Without function					

These settings assign the function of a binary input signal to the output of the logic equation.

Single-pole signals

Parameter						Address
Default	Min	Max	Unit		Logic Diagram	
SIG_1: Designat. sig. S001						226 000
1: S001						
SIG_1: Designat. sig. S002						226 008
2: S002						
SIG_1: Designat. sig. S003						226 016
3: S003						
SIG_1: Designat. sig. S004						226 024
4: S004						
SIG_1: Designat. sig. S005						226 032
5: S005						
SIG_1: Designat. sig. S006						226 040
6: S006						
SIG_1: Designat. sig. S007						226 048
7: S007						
SIG_1: Designat. sig. S008						226 056
8: S008						
SIG_1: Designat. sig. S009						226 064
9: S009						
SIG_1: Designat. sig. S010						226 072
10: S010						
SIG_1: Designat. sig. S011						226 080
11: S011						
SIG_1: Designat. sig. S012						226 088
12: S012						
SIG_1: Designat. SIG_DC3						233 000
234: SIGNAL DC3						
Selection of the signal designation.						
SIG_1: Oper. mode sig. S001						226 001
1: Start/end signal				Fig. 3-210, (p. 3-267)		
SIG_1: Oper. mode sig. S002						226 009
1: Start/end signal						
SIG_1: Oper. mode sig. S003						226 017
1: Start/end signal						
SIG_1: Oper. mode sig. S004						226 025
1: Start/end signal						
SIG_1: Oper. mode sig. S005						226 033
1: Start/end signal						

Parameter						Address
Default	Min	Max	Unit			Logic Diagram
SIG_1: Oper. mode sig. S006						226 041
1: Start/end signal						
SIG_1: Oper. mode sig. S007						226 049
1: Start/end signal						
SIG_1: Oper. mode sig. S008						226 057
1: Start/end signal						
SIG_1: Oper. mode sig. S009						226 065
1: Start/end signal						
SIG_1: Oper. mode sig. S010						226 073
1: Start/end signal						
SIG_1: Oper. mode sig. S011						226 081
1: Start/end signal						
SIG_1: Oper. mode sig. S012						226 089
1: Start/end signal						
Selection of the signal operating mode.						
SIG_1: Gr.asg. debounc.S001						226 003
1: Group 1				Fig. 3-210, (p. 3-267) Fig. 3-211, (p. 3-268)		
SIG_1: Gr.asg. debounc.S002						226 011
1: Group 1						
SIG_1: Gr.asg. debounc.S003						226 019
1: Group 1						
SIG_1: Gr.asg. debounc.S004						226 027
1: Group 1						
SIG_1: Gr.asg. debounc.S005						226 035
1: Group 1						
SIG_1: Gr.asg. debounc.S006						226 043
1: Group 1						
SIG_1: Gr.asg. debounc.S007						226 051
1: Group 1						
SIG_1: Gr.asg. debounc.S008						226 059
1: Group 1						
SIG_1: Gr.asg. debounc.S009						226 067
1: Group 1						
SIG_1: Gr.asg. debounc.S010						226 075
1: Group 1						
SIG_1: Gr.asg. debounc.S011						226 083
1: Group 1						

Parameter							Address
Default	**Min**	**Max**	**Unit**			**Logic Diagram**	
SIG_1: Gr.asg. debounc.S012							226 091
1: Group 1							
Group assignment for the debouncing time and the chatter suppression.							
SIG_1: Min. sig. dur. S001							226 002
0	0	254	s	Fig. 3-210, (p. 3-267)			
SIG_1: Min. sig. dur. S002							226 010
0	0	254	s				
SIG_1: Min. sig. dur. S003							226 018
0	0	254	s				
SIG_1: Min. sig. dur. S004							226 026
0	0	254	s				
SIG_1: Min. sig. dur. S005							226 034
0	0	254	s				
SIG_1: Min. sig. dur. S006							226 042
0	0	254	s				
SIG_1: Min. sig. dur. S007							226 050
0	0	254	s				
SIG_1: Min. sig. dur. S008							226 058
0	0	254	s				
SIG_1: Min. sig. dur. S009							226 066
0	0	254	s				
SIG_1: Min. sig. dur. S010							226 074
0	0	254	s				
SIG_1: Min. sig. dur. S011							226 082
0	0	254	s				
SIG_1: Min. sig. dur. S012							226 090
0	0	254	s				
The logic “1” signal must be available for this minimum time setting so that a telegram can be sent in the *Start/end signal* mode.							

Single-pole commands

Parameter						Address
Default	Min	Max	Unit			Logic Diagram
CMD_1: Design. command C001						200 000
1: C001						
CMD_1: Design. command C002						200 005
2: C002						
CMD_1: Design. command C003						200 010
3: C003						
CMD_1: Design. command C004						200 015
4: C004						
CMD_1: Design. command C005						200 020
5: C005						
CMD_1: Design. command C006						200 025
6: C006						
CMD_1: Design. command C007						200 030
7: C007						
CMD_1: Design. command C008						200 035
8: C008						
CMD_1: Design. command C009						200 040
9: C009						
CMD_1: Design. command C010						200 045
10: C010						
CMD_1: Design. command C011						200 050
11: C011						
CMD_1: Design. command C012						200 055
12: C012						
Selection of the command designation.						
CMD_1: Oper. mode cmd. C001						200 002
3: Persistent command				Fig. 3-209, (p. 3-265)		
CMD_1: Oper. mode cmd. C002						200 007
3: Persistent command						
CMD_1: Oper. mode cmd. C003						200 012
3: Persistent command						
CMD_1: Oper. mode cmd. C004						200 017
3: Persistent command						
CMD_1: Oper. mode cmd. C005						200 022
3: Persistent command						
CMD_1: Oper. mode cmd. C006						200 027
3: Persistent command						

Parameter						Address
Default	Min	Max	Unit		Logic Diagram	
CMD_1: Oper. mode cmd. C007						200 032
3: Persistent command						
CMD_1: Oper. mode cmd. C008						200 037
3: Persistent command						
CMD_1: Oper. mode cmd. C009						200 042
3: Persistent command						
CMD_1: Oper. mode cmd. C010						200 047
3: Persistent command						
CMD_1: Oper. mode cmd. C011						200 052
3: Persistent command						
CMD_1: Oper. mode cmd. C012						200 057
3: Persistent command						
Selection of the command operating mode.						

Binary counts

Parameter						Address
Default	**Min**	**Max**	**Unit**			**Logic Diagram**
COUNT: General enable USER						217 000
0: No				Fig. 3-215, (p. 3-273)		
Disabling or enabling binary counts.						
COUNT: Debounce t. count. 1						217 160
3	0	1000	ms	Fig. 3-215, (p. 3-273)		
COUNT: Debounce t. count. 2						217 161
3	0	1000	ms			
COUNT: Debounce t. count. 3						217 162
3	0	1000	ms			
COUNT: Debounce t. count. 4						217 163
3	0	1000	ms			
COUNT: Debounce t. count.17						217 176
3	0	1000	ms			
COUNT: Debounce t. count.18						217 177
3	0	1000	ms			
COUNT: Debounce t. count.19						217 178
3	0	1000	ms			
COUNT: Debounce t. count.20						217 179
3	0	1000	ms			
COUNT: Debounce t. count.21						217 180
3	0	1000	ms			
COUNT: Debounce t. count.22						217 181
3	0	1000	ms			
COUNT: Debounce t. count.23						217 182
3	0	1000	ms			
COUNT: Debounce t. count.24						217 183
3	0	1000	ms			
Setting for the debounce time of the binary signal to be counted.						
COUNT: Limit counter 1						217 221
Blocked	1	65000				
COUNT: Limit counter 2						217 222
Blocked	1	65000				
COUNT: Limit counter 3						217 223
Blocked	1	65000				

Parameter							Address
Default	**Min**	**Max**	**Unit**			**Logic**	**Diagram**
COUNT: Limit counter 4							217 224
Blocked	1	65000					
Setting a limit for the counter value. A warning signal is issued if the counter value exceeds the set limit. Setting this parameter to *Blocked* disables the limit check.							
COUNT: Cycle t.count transm							217 007
0: No transmission				Fig. 3-215, (p. 3-273)			
Setting the cycle time for the periodic transmission of the counts.							
COUNT: IEC61850 pulsQty							221 096
1	0	1000					
Setting the scaling factor to transmit the counter value via IEC 61850. According to the standard the resulting value is calculated as: Value transmitted = actual value · pulsQty (see IEC 61850: Value = actVal · pulsQty).							

7.1.3.3 Parameter Subsets

Main function

Parameter				Address			
Default	**Min**	**Max**	**Unit**	**Logic Diagram**			
MAIN: Vnom prim. end a PSx				019 017	019 057	019 061	019 065
110.0	0.1	1500.0	kV				
Setting for the primary nominal voltage at end a of the transformer.							
MAIN: Vnom prim. end b PSx				019 018	019 058	019 062	019 066
110.0	0.1	1500.0	kV				
Setting for the primary nominal voltage at end b of the transformer.							
MAIN: Vnom prim. end c PSx				019 019	019 059	019 063	019 067
110.0	0.1	1500.0	kV				
Setting for the primary nominal voltage at end c of the transformer.							
MAIN: Phase reversal a PSx				010 200	010 201	010 202	010 203
0: No swap				Fig. 3-50, (p. 3-84)			
MAIN: Phase reversal b PSx				010 204	010 205	010 206	010 207
0: No swap				Fig. 3-50, (p. 3-84)			
MAIN: Phase reversal c PSx				010 208	010 209	010 210	010 211
0: No swap				Fig. 3-50, (p. 3-84)			
Setting for the phase reversal function (see description for function group MAIN) for electrical machines in pumped storage power stations. Phases to be reversed (*A-B swapped*, *A-B swapped* or *A-B swapped*) may be set separately for each end. At the same time the display **MAIN: Phase reversal activ** will be triggered unless the setting is *No swap*.							

Differential protection

Parameter							Address
Default	**Min**	**Max**	**Unit**				**Logic Diagram**
DIFF: Enable PSx				072 152	073 152	074 152	075 152
0: No							
This setting defines the parameter subset (setting group) in which differential protection is enabled.							
DIFF: Vec.gr. ends a-b PSx				019 010	019 040	019 041	019 042
0	0	11		Fig. 3-102, (p. 3-148)			
DIFF: Vec.gr. ends a-c PSx				019 011	019 043	019 044	019 045
0	0	11		Fig. 3-102, (p. 3-148)			
For standard connection of the P633 (see Chapter “Installation and Connection”), the vector group ID needs to be entered. For connection reversal applied to one individual end, this can be taken into account in setting (**MAIN: Conn.meas.circ. IP,a** or **MAIN: Conn.meas.circ. IP,b**). The following algorithms apply: Setting = ID + 6 If the addition results in a value > 12 then: Setting = (ID + 6) – 12 If the phase currents of the low and high voltage sides are exchanged and if this is not accounted for by the settings at **MAIN: Conn.meas,circ. IP,z** (where z is end a,b,c or d) and **MAIN: Conn.meas,circ. IY,z** (where z is end a,b or c) then the algorithm is: Setting = 12 – ID If an A-C-B phase sequence (or "anti-clockwise rotating field") is present then this should be entered as a setting at the P633. In this case, the P633 will automatically form the complementary value of the set vector group ID to the number 12 (vector group ID = 12 – set ID). For application of the P633 as machine protection, the setting must be 0 or 6 depending on the current transformer connection.							
DIFF: Idiff> PSx				072 142	073 142	074 142	075 142
0.20	0.10	2.50	Iref	Fig. 3-106, (p. 3-152)			
Operate value of the differential protection function as referred to the reference current of the relevant transformer end.							
DIFF: Idiff>> PSx				072 143	073 143	074 143	075 143
15.0	2.5	30.0	Iref	Fig. 3-106, (p. 3-152)			
Threshold value of the differential current for deactivation of the inrush stabilization function (harmonic restraint) and of the overfluxing restraint. **Note:** If the threshold is set too high, it is possible for the P633 not to trip in the presence of internal faults with transformer saturation.							

Parameter							Address
Default	**Min**	**Max**	**Unit**				**Logic Diagram**
DIFF: Idiff>>> PSx				072 144	073 144	074 144	075 144
30.0	2.5	30.0	Iref	Fig. 3-106, (p. 3-152)			
This setting defines the threshold value for the differential current where the differential protection is triggered regardless of restraining quantity, inrush stabilization and saturation discriminator. **Note:** If the threshold is set too low, the P633 can trip in the presence of external faults with transformer saturation.							
DIFF: Idiff>(CTS) PSx				080 000	081 000	082 000	083 000
0.20	0.10	30.00	Iref				
If the Current Transformer Supervision (CTS) function has detected a CT failure, then the basic operating threshold **DIFF: Idiff> PSx** can be raised to a settable safe value **DIFF: Idiff>(CTS) PSx**. Please refer to the CTS function section for more details.							
DIFF: m1 PSx				072 145	073 145	074 145	075 145
0.30	0.10	1.50		Fig. 3-106, (p. 3-152)			
Gradient of the differential protection tripping characteristic for the range $0.5 \cdot I_{diff>} < I_R \leq I_{R,m1}$.							
DIFF: m2 PSx				072 146	073 146	074 146	075 146
0.70	0.10	1.50		Fig. 3-106, (p. 3-152)			
Gradient of the differential protection tripping characteristic for the range $I_R > I_{R,m2}$.							
DIFF: IR,m2 PSx				072 147	073 147	074 147	075 147
4.0	1.5	10.0	Iref	Fig. 3-106, (p. 3-152)			
Knee point where the tripping characteristic continues with the setting for gradient m2.							
DIFF: Op.mode rush rst.PSx				072 148	073 148	074 148	075 148
1: Not phase-selective				Fig. 3-106, (p. 3-152)			
Setting for the operating mode of the inrush stabilization function. For application of the P633 as machine protection, harmonic restraint can be disabled by way of this setting. For application of the P633 as transformer protection, the user can select whether the harmonic restraint should operate in cross-blocking mode or selectively for one measuring system.							
DIFF: RushI(2f0)/I(f0) PSx				072 159	073 159	074 159	075 159
20	10	50	%	Fig. 3-107, (p. 3-153)			
Operate value of the inrush stabilization (harmonic restraint) of differential protection as a ratio of the second harmonic with the fundamental component of the differential current, in percent.							

Parameter				Address			
Default	Min	Max	Unit	Logic Diagram			
DIFF: 0-seq. filt.a en.PSx				072 155	073 155	074 155	075 155
1: Yes				Fig. 3-102, (p. 3-148)			
Enabling or disabling the zero-sequence filtering of winding a.							
DIFF: 0-seq. filt.b en.PSx				072 156	073 156	074 156	075 156
1: Yes				Fig. 3-102, (p. 3-148)			
Enabling or disabling the zero-sequence filtering of winding b.							
DIFF: 0-seq. filt.c en.PSx				072 157	073 157	074 157	075 157
1: Yes				Fig. 3-102, (p. 3-148)			
Enabling or disabling zero-sequence filtering for winding c.							
DIFF: Overflux.bl. en. PSx				072 158	073 158	074 158	075 158
0: No				Fig. 3-108, (p. 3-154)			
Enabling or disabling the overfluxing restraint.							
DIFF: Ov. I(5f0)/I(f0) PSx				072 160	073 160	074 160	075 160
20	10	80	%	Fig. 3-108, (p. 3-154)			
Operate value of the overfluxing restraint of differential protection as ratio of the fifth harmonic component to the fundamental wave for the differential current, in percent.							
DIFF: Op.del.,trip sig.PSx				010 162	010 163	010 164	010 165
0.00	0.00	100.00	s	Fig. 3-106, (p. 3-152)			
The time-delay of the differential protection trip signal can be set here.							
DIFF: Hyst. effective PSx				072 006	073 006	074 006	075 006
1: Yes							
Enabling or disabling the hysteresis of the tripping characteristic at the rate of 10%.							

Ground differential protection

Parameter				Address			
Default	Min	Max	Unit	Logic Diagram			
REF_1: Enable PSx				072 141	073 141	074 141	075 141
0: No				Fig. 3-111, (p. 3-158)			
REF_2: Enable PSx				072 161	073 161	074 161	075 161
0: No							
REF_3: Enable PSx				072 031	073 031	074 031	075 031
0: No							
This setting defines the parameter subset in which ground differential protection is enabled.							
REF_1: Operating mode PSx				072 149	073 149	074 149	075 149
1: Low imped. / sum(IP)							
REF_2: Operating mode PSx				072 169	073 169	074 169	075 169
1: Low imped. / sum(IP)							
REF_3: Operating mode PSx				072 049	073 049	074 049	075 049
1: Low imped. / sum(IP)							
Three operating modes can be selected. The *Low imped. / sum(IP)* operating mode is the existing low impedance ground differential protection mode (already existing since version P633–602). The alternative selectable modes are *Low imped. / IP,max* and *High impedance*.							
REF_1: Bl.f.DIFF trigg. PSx				080 006	081 006	082 006	083 006
0: No				Fig. 3-111, (p. 3-158)			
REF_2: Bl.f.DIFF trigg. PSx				080 007	081 007	082 007	083 007
0: No							
REF_3: Bl.f.DIFF trigg. PSx				080 008	081 008	082 008	083 008
0: No							
This setting determines whether the ground-differential short circuit protection is blocked in case of a starting of the differential protection.							
REF_1: CTS effective PSx				080 003	081 003	082 003	083 003
0: No							
REF_2: CTS effective PSx				080 004	081 004	082 004	083 004
0: No							
REF_3: CTS effective PSx				080 005	081 005	082 005	083 005
0: No							
This setting determines whether the ground-differential short circuit protection associated with the corresponding CTS signal, **CTS: Alarm end a** (or **CTS: Alarm end b** etc.), is blocked.							
REF_1: Idiff> PSx				072 150	073 150	074 150	075 150
0.20	0.10	1.00	Iref	Fig. 3-115, (p. 3-164)			

Parameter				Address			
Default	**Min**	**Max**	**Unit**	**Logic Diagram**			
REF_2: Idiff> PSx				072 170	073 170	074 170	075 170
0.20	0.10	1.00	Iref				
REF_3: Idiff> PSx				072 040	073 040	074 040	075 040
0.20	0.10	1.00	Iref				
Operate value of the ground differential protection function as referred to the reference current of the relevant transformer end.							
REF_1: Idiff>>> PSx				072 151	073 151	074 151	075 151
10.0	2.5	30.0	Iref	Fig. 3-115, (p. 3-164)			
REF_2: Idiff>>> PSx				072 171	073 171	074 171	075 171
10.0	2.5	30.0	Iref				
REF_3: Idiff>>> PSx				072 041	073 041	074 041	075 041
10.0	2.5	30.0	Iref				
Threshold value of the differential current for tripping by the ground differential protection function independently of the restraining variable.							
REF_1: m1 PSx				072 162	073 162	074 162	075 162
0.20	0.00	1.00		Fig. 3-115, (p. 3-164)			
REF_2: m1 PSx				072 172	073 172	074 172	075 172
0.20	0.00	1.00					
REF_3: m1 PSx				072 192	073 192	074 192	075 192
0.20	0.00	1.00					
Gradient of the differential protection tripping characteristic with the operating mode '*Low imped. / sum(IP)*'. Gradient of the differential protection tripping characteristic for the range $I_R < I_{R,m1}$ with the operating modes '*Low imped. / IP,max* ' and '*High impedance*'.							
REF_1: m2 PSx				072 163	073 163	074 163	075 163
1.50	0.15	1.50		Fig. 3-115, (p. 3-164)			
REF_2: m2 PSx				072 165	073 165	074 165	075 165
1.50	0.15	1.50					
REF_3: m2 PSx				072 193	073 193	074 193	075 193
1.50	0.15	1.50					
Gradient of the differential protection tripping characteristic for the range $I_R > I_{R,m2}$ with the operating modes '*Low imped. / IP,max* ' and '*High impedance*'.							
REF_1: IR,m2 PSx				072 164	073 164	074 164	075 164
1.00	0.10	1.50	Iref	Fig. 3-115, (p. 3-164)			
REF_2: IR,m2 PSx				072 166	073 166	074 166	075 166
1.00	0.10	1.50	Iref				

Parameter							Address
Default	**Min**	**Max**	**Unit**				**Logic Diagram**
REF_3: IR,m2 PSx				072 194	073 194	074 194	075 194
1.00	0.10	1.50	Iref				
Knee point from which the characteristic runs with a set gradient of m_2 (operating mode '*Low imped. / IP,max*').							

Definite-time overcurrent protection

Parameter				Address			
Default	Min	Max	Unit	Logic Diagram			
DTOC1: Enable PSx				076 050	077 050	078 050	079 050
0: No				Fig. 3-119, (p. 3-169)			
DTOC2: Enable PSx				076 070	077 070	078 070	079 070
0: No							
DTOC3: Enable PSx				076 180	077 180	078 180	079 180
0: No							
This setting specifies the parameter subset to be enabled for definite-time overcurrent protection.							
DTOC1: Block tim.st. IN PSx				076 067	077 067	078 067	079 067
0: Without				Fig. 3-123, (p. 3-174)			
DTOC2: Block tim.st. IN PSx				076 087	077 087	078 087	079 087
0: Without							
DTOC3: Block tim.st. IN PSx				076 108	077 108	078 108	079 108
0: Without							
This setting defines whether blocking of the residual current stages will take place for single-pole or multi-pole phase current starting.							
DTOC1: Gen.starting modePSx				076 066	077 066	078 066	079 066
1: With start. IN/Ineg				Fig. 3-124, (p. 3-175)			
DTOC2: Gen.starting modePSx				076 086	077 086	078 086	079 086
1: With start. IN/Ineg							
DTOC3: Gen.starting modePSx				076 106	077 106	078 106	079 106
1: With start. IN/Ineg							
This setting defines whether starting of the residual current stages will result in the formation of the general starting signal of DTOC protection.							
DTOC1: tGS PSx				076 065	077 065	078 065	079 065
0.00	0.00	100.00	s	Fig. 3-124, (p. 3-175)			
DTOC2: tGS PSx				076 085	077 085	078 085	079 085
0.00	0.00	100.00	s				
DTOC3: tGS PSx				076 107	077 107	078 107	079 107
0.00	0.00	100.00	s				
Setting for the operate delay of the general starting signal of DTOC protection.							
DTOC1: Rush restr.enabl PSx				076 063	077 063	078 063	079 063
0: No				Fig. 3-121, (p. 3-171)			
DTOC2: Rush restr.enabl PSx				076 083	077 083	078 083	079 083
0: No							

Parameter				Address			
Default	Min	Max	Unit	Logic Diagram			
DTOC3: Rush restr.enabl PSx				076 193	077 193	078 193	079 193
0: No							
Setting as to whether the inrush stabilization function (harmonic restraint) of differential protection shall be able to block the definite-time overcurrent protection function.							
DTOC1: Meas.value I/IN> PSx				060 002	060 003	060 004	060 005
0: Fundamental				Fig. 3-120, (p. 3-170) Fig. 3-123, (p. 3-174)			
DTOC1: Meas.val. I/IN>> PSx				060 006	060 007	060 008	060 009
0: Fundamental				Fig. 3-120, (p. 3-170) Fig. 3-123, (p. 3-174)			
DTOC1: Meas.val.I/IN>>> PSx				060 010	060 011	060 012	060 013
0: Fundamental				Fig. 3-120, (p. 3-170) Fig. 3-123, (p. 3-174)			
DTOC2: Meas.value I/IN> PSx				060 061	060 062	060 063	060 064
0: Fundamental							
DTOC2: Meas.val. I/IN>> PSx				060 065	060 066	060 067	060 068
0: Fundamental							
DTOC2: Meas.val.I/IN>>> PSx				060 069	060 070	060 071	060 072
0: Fundamental							
DTOC3: Meas.value I/IN> PSx				060 073	060 074	060 075	060 076
0: Fundamental							
DTOC3: Meas.val. I/IN>> PSx				060 077	060 078	060 079	060 080
0: Fundamental							
DTOC3: Meas.val.I/IN>>> PSx				060 081	060 082	060 083	060 084
0: Fundamental							
These settings allow to select for the respective overcurrent stage whether the starting decision shall be based on the fundamental or on the r.m.s. value. Remark: For the negative-sequence stages, the starting decision is always based on the fundamental.							
DTOC1: I> PSx				076 051	077 051	078 051	079 051
1.00	0.10	30.00	Inom	Fig. 3-120, (p. 3-170)			
DTOC2: I> PSx				076 071	077 071	078 071	079 071
1.00	0.10	30.00	Inom				
DTOC3: I> PSx				076 081	077 081	078 081	079 081
1.00	0.10	30.00	Inom				
Setting for operate value I>.							
DTOC1: I>> PSx				076 052	077 052	078 052	079 052
4.00	0.10	30.00	Inom	Fig. 3-120, (p. 3-170)			

Parameter				Address			
Default	**Min**	**Max**	**Unit**	**Logic Diagram**			
DTOC2: I>> PSx				076 072	077 072	078 072	079 072
4.00	0.10	30.00	Inom				
DTOC3: I>> PSx				076 082	077 082	078 082	079 082
4.00	0.10	30.00	Inom				
Setting for operate value I>>.							
DTOC1: I>>> PSx				076 053	077 053	078 053	079 053
Blocked	0.10	30.00	Inom	Fig. 3-120, (p. 3-170)			
DTOC2: I>>> PSx				076 163	077 163	078 163	079 163
Blocked	0.10	30.00	Inom				
DTOC3: I>>> PSx				076 183	077 183	078 183	079 183
Blocked	0.10	30.00	Inom				
Setting for operate value I>>>.							
DTOC1: I> dynamic PSx				076 151	077 151	078 151	079 151
1.00	0.10	30.00	Inom	Fig. 3-120, (p. 3-170)			
DTOC2: I> dynamic PSx				076 161	077 161	078 161	079 161
1.00	0.10	30.00	Inom				
DTOC3: I> dynamic PSx				076 181	077 181	078 181	079 181
1.00	0.10	30.00	Inom				
Setting for operate value I> in dynamic mode. This operate value is only effective while the hold time for dynamic parameters is elapsing.							
DTOC1: I>> dynamic PSx				076 152	077 152	078 152	079 152
1.00	0.10	30.00	Inom	Fig. 3-120, (p. 3-170)			
DTOC2: I>> dynamic PSx				076 162	077 162	078 162	079 162
1.00	0.10	30.00	Inom				
DTOC3: I>> dynamic PSx				076 182	077 182	078 182	079 182
1.00	0.10	30.00	Inom				
Setting for operate value I>> in dynamic mode. This operate value is only effective while the hold time for dynamic parameters is elapsing.							
DTOC1: I>>> dynamic PSx				076 153	077 153	078 153	079 153
1.00	0.10	30.00	Inom	Fig. 3-120, (p. 3-170)			
DTOC2: I>>> dynamic PSx				076 173	077 173	078 173	079 173
1.00	0.10	30.00	Inom				
DTOC3: I>>> dynamic PSx				076 109	077 109	078 109	079 109
1.00	0.10	30.00	Inom				
Setting for operate value I>>> in dynamic mode. This operate value is only effective while the hold time for dynamic parameters is elapsing.							

Parameter				Address			
Default	**Min**	**Max**	**Unit**	**Logic Diagram**			
DTOC1: tI> PSx				076 057	077 057	078 057	079 057
1.00	0.00	100.00	s	Fig. 3-121, (p. 3-171)			
DTOC2: tI> PSx				076 077	077 077	078 077	079 077
1.00	0.00	100.00	s				
DTOC3: tI> PSx				076 187	077 187	078 187	079 187
1.00	0.00	100.00	s				
Setting for operate delay I>.							
DTOC1: tI>> PSx				076 058	077 058	078 058	079 058
0.50	0.00	100.00	s	Fig. 3-121, (p. 3-171)			
DTOC2: tI>> PSx				076 078	077 078	078 078	079 078
0.50	0.00	100.00	s				
DTOC3: tI>> PSx				076 188	077 188	078 188	079 188
0.50	0.00	100.00	s				
Setting for operate delay I>>.							
DTOC1: tI>>> PSx				076 059	077 059	078 059	079 059
0.50	0.00	100.00	s	Fig. 3-121, (p. 3-171)			
DTOC2: tI>>> PSx				076 169	077 169	078 169	079 169
0.50	0.00	100.00	s				
DTOC3: tI>>> PSx				076 189	077 189	078 189	079 189
0.50	0.00	100.00	s				
Setting for the operate delay of the I>>> stage.							
DTOC1: Ineg> PSx				076 197	077 197	078 197	079 197
0.25	0.10	8.00	Inom	Fig. 3-122, (p. 3-172)			
DTOC2: Ineg> PSx				076 207	077 207	078 207	079 207
0.25	0.10	8.00	Inom				
DTOC3: Ineg> PSx				076 217	077 217	078 217	079 217
0.25	0.10	8.00	Inom				
Setting for the operate value of the Ineg> stage.							
DTOC1: Ineg>> PSx				076 198	077 198	078 198	079 198
Blocked	0.10	8.00	Inom	Fig. 3-122, (p. 3-172)			
DTOC2: Ineg>> PSx				076 208	077 208	078 208	079 208
Blocked	0.10	8.00	Inom				
DTOC3: Ineg>> PSx				076 218	077 218	078 218	079 218
Blocked	0.10	8.00	Inom				
Setting for the operate value of the Ineg>> stage.							

Parameter				Address			
Default	**Min**	**Max**	**Unit**	**Logic Diagram**			
DTOC1: Ineg>>> PSx				076 199	077 199	078 199	079 199
Blocked	0.10	8.00	Inom	Fig. 3-122, (p. 3-172)			
DTOC2: Ineg>>> PSx				076 209	077 209	078 209	079 209
Blocked	0.10	8.00	Inom				
DTOC3: Ineg>>> PSx				076 219	077 219	078 219	079 219
Blocked	0.10	8.00	Inom				
Setting for the operate value of the Ineg>>> stage.							
DTOC1: Ineg> dynamic PSx				076 200	077 200	078 200	079 200
1.00	0.10	8.00	Inom	Fig. 3-122, (p. 3-172)			
DTOC2: Ineg> dynamic PSx				076 210	077 210	078 210	079 210
1.00	0.10	8.00	Inom				
DTOC3: Ineg> dynamic PSx				076 220	077 220	078 220	079 220
1.00	0.10	8.00	Inom				
Setting for operate value Ineg> dynamic. (Ineg = negative-sequence current) This operate value is effective only while the timer stage **MAIN: Hold time dyn.param.** is elapsing.							
DTOC1: Ineg>> dynamic PSx				076 201	077 201	078 201	079 201
1.00	0.10	8.00	Inom	Fig. 3-122, (p. 3-172)			
DTOC2: Ineg>> dynamic PSx				076 211	077 211	078 211	079 211
1.00	0.10	8.00	Inom				
DTOC3: Ineg>> dynamic PSx				076 221	077 221	078 221	079 221
1.00	0.10	8.00	Inom				
Setting for operate value Ineg>> dynamic. (Ineg = negative-sequence current) This operate value is effective only while the timer stage **MAIN: Hold time dyn.param.** is elapsing.							
DTOC1: Ineg>>> dynamic PSx				076 202	077 202	078 202	079 202
1.00	0.10	8.00	Inom				
DTOC2: Ineg>>> dynamic PSx				076 212	077 212	078 212	079 212
1.00	0.10	8.00	Inom				
DTOC3: Ineg>>> dynamic PSx				076 222	077 222	078 222	079 222
1.00	0.10	8.00	Inom				
Setting for operate value Ineg>>> dynamic. (Ineg = negative-sequence current) This operate value is effective only while the timer stage **MAIN: Hold time dyn.param.** is elapsing.							
DTOC1: tIneg> PSx				076 203	077 203	078 203	079 203
1.00	0.00	100.00	s	Fig. 3-122, (p. 3-172)			
DTOC2: tIneg> PSx				076 213	077 213	078 213	079 213
1.00	0.00	100.00	s				

Parameter				Address			
Default	**Min**	**Max**	**Unit**	**Logic Diagram**			
DTOC3: tIneg> PSx				076 223	077 223	078 223	079 223
1.00	0.00	100.00	s				
Setting for the operate delay of the Ineg> stage.							
DTOC1: tIneg>> PSx				076 204	077 204	078 204	079 204
0.50	0.00	100.00	s	Fig. 3-122, (p. 3-172)			
DTOC2: tIneg>> PSx				076 214	077 214	078 214	079 214
0.50	0.00	100.00	s				
DTOC3: tIneg>> PSx				076 224	077 224	078 224	079 224
0.50	0.00	100.00	s				
Setting for the operate delay of the Ineg>> stage.							
DTOC1: tIneg>>> PSx				076 205	077 205	078 205	079 205
0.50	0.00	100.00	s	Fig. 3-122, (p. 3-172)			
DTOC2: tIneg>>> PSx				076 215	077 215	078 215	079 215
0.50	0.00	100.00	s				
DTOC3: tIneg>>> PSx				076 225	077 225	078 225	079 225
0.50	0.00	100.00	s				
Setting for the operate delay of the Ineg>>> stage.							
DTOC1: IN> PSx				076 054	077 054	078 054	079 054
0.25	0.10	8.00	Inom	Fig. 3-123, (p. 3-174)			
DTOC2: IN> PSx				076 164	077 164	078 164	079 164
0.25	0.10	8.00	Inom				
DTOC3: IN> PSx				076 184	077 184	078 184	079 184
0.25	0.10	8.00	Inom				
Setting for operate value IN>.							
DTOC1: IN>> PSx				076 055	077 055	078 055	079 055
Blocked	0.10	8.00	Inom	Fig. 3-123, (p. 3-174)			
DTOC2: IN>> PSx				076 165	077 165	078 165	079 165
Blocked	0.10	8.00	Inom				
DTOC3: IN>> PSx				076 185	077 185	078 185	079 185
Blocked	0.10	8.00	Inom				
Setting for operate value IN>>.							
DTOC1: IN>>> PSx				076 056	077 056	078 056	079 056
Blocked	0.10	8.00	Inom	Fig. 3-123, (p. 3-174)			
DTOC2: IN>>> PSx				076 166	077 166	078 166	079 166
Blocked	0.10	8.00	Inom				

Parameter				Address			
Default	**Min**	**Max**	**Unit**	**Logic Diagram**			
DTOC3: IN>>> PSx				076 186	077 186	078 186	079 186
Blocked	0.10	8.00	Inom				
Setting for operate value IN>>>.							
DTOC1: IN> dynamic PSx				076 154	077 154	078 154	079 154
1.00	0.10	8.00	Inom	Fig. 3-123, (p. 3-174)			
DTOC2: IN> dynamic PSx				076 174	077 174	078 174	079 174
1.00	0.10	8.00	Inom				
DTOC3: IN> dynamic PSx				076 194	077 194	078 194	079 194
1.00	0.10	8.00	Inom				
Setting for operate value IN> in dynamic mode. This operate value is only effective while the hold time for dynamic parameters is elapsing.							
DTOC1: IN>> dynamic PSx				076 155	077 155	078 155	079 155
1.00	0.10	8.00	Inom	Fig. 3-123, (p. 3-174)			
DTOC2: IN>> dynamic PSx				076 175	077 175	078 175	079 175
1.00	0.10	8.00	Inom				
DTOC3: IN>> dynamic PSx				076 195	077 195	078 195	079 195
1.00	0.10	8.00	Inom				
Setting for operate value IN>> in dynamic mode. This operate value is only effective while the hold time for dynamic parameters is elapsing.							
DTOC1: IN>>> dynamic PSx				076 156	077 156	078 156	079 156
1.00	0.10	8.00	Inom	Fig. 3-123, (p. 3-174)			
DTOC2: IN>>> dynamic PSx				076 176	077 176	078 176	079 176
1.00	0.10	8.00	Inom				
DTOC3: IN>>> dynamic PSx				076 196	077 196	078 196	079 196
1.00	0.10	8.00	Inom				
Setting for operate value IN>>> in dynamic mode. This operate value is only effective while the hold time for dynamic parameters is elapsing.							
DTOC1: tIN> PSx				076 060	077 060	078 060	079 060
1.00	0.00	100.00	s	Fig. 3-123, (p. 3-174)			
DTOC2: tIN> PSx				076 170	077 170	078 170	079 170
1.00	0.00	100.00	s				
DTOC3: tIN> PSx				076 190	077 190	078 190	079 190
1.00	0.00	100.00	s				
Setting for the operate delay of the IN> stage.							
DTOC1: tIN>> PSx				076 061	077 061	078 061	079 061
0.50	0.00	100.00	s	Fig. 3-123, (p. 3-174)			

Parameter				Address			
Default	**Min**	**Max**	**Unit**	**Logic Diagram**			
DTOC2: tIN>> PSx				076 171	077 171	078 171	079 171
0.50	0.00	100.00	s				
DTOC3: tIN>> PSx				076 191	077 191	078 191	079 191
0.50	0.00	100.00	s				
Setting for the operate delay of the IN>> stage.							
DTOC1: tIN>>> PSx				076 062	077 062	078 062	079 062
0.50	0.00	100.00	s	Fig. 3-123, (p. 3-174)			
DTOC2: tIN>>> PSx				076 172	077 172	078 172	079 172
0.50	0.00	100.00	s				
DTOC3: tIN>>> PSx				076 192	077 192	078 192	079 192
0.50	0.00	100.00	s				
Setting for the operate delay of the IN>>> stage.							

Inverse-time overcurrent protection

Parameter				Address			
Default	Min	Max	Unit	Logic Diagram			
IDMT1: Enable PSx				081 050	082 050	083 050	084 050
0: No				Fig. 3-127, (p. 3-177)			
IDMT2: Enable PSx				081 170	082 170	083 170	084 170
0: No							
IDMT3: Enable PSx				081 190	082 190	083 190	084 190
0: No							
This setting specifies the parameter subset to be enabled for inverse-time overcurrent protection.							
IDMT1: Block tim.st. IN PSx				081 068	082 068	083 068	084 068
0: Without							
IDMT2: Block tim.st. IN PSx				081 188	082 188	083 188	084 188
0: Without							
IDMT3: Block tim.st. IN PSx				081 208	082 208	083 208	084 208
0: Without							
This setting defines whether a blocking of the residual and negative-sequence current stages should take place for single-pole startings or multi-pole phase current startings.							
IDMT1: Gen.starting modePSx				081 059	082 059	083 059	084 059
1: With start. IN/Ineg				Fig. 3-136, (p. 3-188)			
IDMT2: Gen.starting modePSx				081 179	082 179	083 179	084 179
1: With start. IN/Ineg							
IDMT3: Gen.starting modePSx				081 199	082 199	083 199	084 199
1: With start. IN/Ineg							
This setting defines whether starting of the residual current stages will result in the formation of the general starting signal of IDMT protection.							
IDMT1: tGS PSx				081 058	082 058	083 058	084 058
0.00	0.00	100.00	s	Fig. 3-136, (p. 3-188)			
IDMT2: tGS PSx				081 178	082 178	083 178	084 178
0.00	0.00	100.00	s				
IDMT3: tGS PSx				081 198	082 198	083 198	084 198
0.00	0.00	100.00	s				
Setting for the operate delay of the general starting signal of IDMT protection.							
IDMT1: Rush restr.enabl PSx				081 060	082 060	083 060	084 060
0: No				Fig. 3-132, (p. 3-182) Fig. 3-133, (p. 3-184)			
IDMT2: Rush restr.enabl PSx				081 180	082 180	083 180	084 180
0: No							

Parameter				Address			
Default	Min	Max	Unit	Logic Diagram			
IDMT3: Rush restr.enabl PSx				081 200	082 200	083 200	084 200
0: No							
Setting as to whether the inrush restraint of differential protection shall be able to block the inverse-time overcurrent protection function.							
IDMT1: Meas.value I/IN PSx				013 192	013 193	013 194	013 195
0: Fundamental				Fig. 3-132, (p. 3-182) Fig. 3-134, (p. 3-185)			
IDMT2: Meas.value I/IN PSx				013 196	013 197	013 198	013 199
0: Fundamental							
IDMT3: Meas.value I/IN PSx				013 200	013 201	013 202	013 203
0: Fundamental							
These settings allow to select for the respective overcurrent stage whether the starting decision shall be based on the fundamental or on the r.m.s. value. Remark: For the negative-sequence stage of each IDMTx, the starting decision is always based on the fundamental.							
IDMT1: Iref,P PSx				081 051	082 051	083 051	084 051
1.00	0.10	4.00	Inom	Fig. 3-132, (p. 3-182)			
IDMT2: Iref,P PSx				081 171	082 171	083 171	084 171
1.00	0.10	4.00	Inom				
IDMT3: Iref,P PSx				081 191	082 191	083 191	084 191
1.00	0.10	4.00	Inom				
Setting for the reference current (phase current system).							
IDMT1: Iref,P dynamic PSx				081 052	082 052	083 052	084 052
1.00	0.10	4.00	Inom	Fig. 3-132, (p. 3-182)			
IDMT2: Iref,P dynamic PSx				081 172	082 172	083 172	084 172
1.00	0.10	4.00	Inom				
IDMT3: Iref,P dynamic PSx				081 192	082 192	083 192	084 192
1.00	0.10	4.00	Inom				
Setting for the reference current (phase current system) in dynamic mode. This operate value is only effective while the hold time for dynamic parameters is elapsing.							
IDMT1: Characteristic P PSx				081 053	082 053	083 053	084 053
0: Definite Time				Fig. 3-132, (p. 3-182)			
IDMT2: Characteristic P PSx				081 173	082 173	083 173	084 173
0: Definite Time							
IDMT3: Characteristic P PSx				081 193	082 193	083 193	084 193
0: Definite Time							
Setting for the tripping characteristic (phase current system).							

Parameter				Address			
Default	Min	Max	Unit	Logic Diagram			
IDMT1: Factor kt,P PSx				081 054	082 054	083 054	084 054
1.00	0.05	10.00		Fig. 3-132, (p. 3-182)			
IDMT2: Factor kt,P PSx				081 174	082 174	083 174	084 174
1.00	0.05	10.00					
IDMT3: Factor kt,P PSx				081 194	082 194	083 194	084 194
1.00	0.05	10.00					
Setting for the factor kt,P of the starting characteristic (phase current system).							
IDMT1: Min. trip t. P PSx				081 057	082 057	083 057	084 057
1.00	0.00	10.00	s	Fig. 3-132, (p. 3-182)			
IDMT2: Min. trip t. P PSx				081 177	082 177	083 177	084 177
1.00	0.00	10.00	s				
IDMT3: Min. trip t. P PSx				081 197	082 197	083 197	084 197
1.00	0.00	10.00	s				
Setting for the minimum trip time (phase current system).							
IDMT1: Hold time P PSx				081 055	082 055	083 055	084 055
0.00	0.00	600.00	s	Fig. 3-132, (p. 3-182)			
IDMT2: Hold time P PSx				081 175	082 175	083 175	084 175
0.00	0.00	600.00	s				
IDMT3: Hold time P PSx				081 195	082 195	083 195	084 195
0.00	0.00	600.00	s				
Setting for the hold time for storing the starting time once the starting has dropped out (phase current system).							
IDMT1: Release P PSx				081 056	082 056	083 056	084 056
1: Without delay				Fig. 3-132, (p. 3-182)			
IDMT2: Release P PSx				081 176	082 176	083 176	084 176
1: Without delay							
IDMT3: Release P PSx				081 196	082 196	083 196	084 196
1: Without delay							
Setting for the reset characteristic (phase current system).							
IDMT1: Iref,neg PSx				081 111	082 111	083 111	084 111
Blocked	0.01	0.80	Inom	Fig. 3-133, (p. 3-184)			
IDMT2: Iref,neg PSx				081 121	082 121	083 121	084 121
Blocked	0.01	0.80	Inom				
IDMT3: Iref,neg PSx				081 131	082 131	083 131	084 131
Blocked	0.01	0.80	Inom				
Setting for the reference current (negative-sequence current system).							

Parameter				Address			
Default	**Min**	**Max**	**Unit**	**Logic Diagram**			
IDMT1: Iref,neg dynamic PSx				081 112	082 112	083 112	084 112
Blocked	0.01	0.80	Inom	Fig. 3-133, (p. 3-184)			
IDMT2: Iref,neg dynamic PSx				081 122	082 122	083 122	084 122
Blocked	0.01	0.80	Inom				
IDMT3: Iref,neg dynamic PSx				081 132	082 132	083 132	084 132
Blocked	0.01	0.80	Inom				
Setting for the reference current (negative-sequence current system). This value is only effective while the hold time for dynamic parameters is elapsing.							
IDMT1: Character. neg. PSx				081 113	082 113	083 113	084 113
0: Definite Time				Fig. 3-133, (p. 3-184)			
IDMT2: Character. neg. PSx				081 123	082 123	083 123	084 123
0: Definite Time							
IDMT3: Character. neg. PSx				081 133	082 133	083 133	084 133
0: Definite Time							
Setting for the tripping characteristic (negative-sequence current system).							
IDMT1: Factor kt,neg PSx				081 114	082 114	083 114	084 114
1.00	0.05	10.00		Fig. 3-133, (p. 3-184)			
IDMT2: Factor kt,neg PSx				081 124	082 124	083 124	084 124
1.00	0.05	10.00					
IDMT3: Factor kt,neg PSx				081 134	082 134	083 134	084 134
1.00	0.05	10.00					
Setting for the factor kt,neg of the starting characteristic (negative-sequence current system).							
IDMT1: Min. trip t. neg PSx				081 117	082 117	083 117	084 117
1.00	0.00	10.00	s	Fig. 3-133, (p. 3-184)			
IDMT2: Min. trip t. neg PSx				081 127	082 127	083 127	084 127
1.00	0.00	10.00	s				
IDMT3: Min. trip t. neg PSx				081 137	082 137	083 137	084 137
1.00	0.00	10.00	s				
Setting for the minimum trip time characteristic (negative-sequence current system).							
IDMT1: Hold time neg PSx				081 115	082 115	083 115	084 115
0.00	0.00	600.00	s	Fig. 3-133, (p. 3-184)			
IDMT2: Hold time neg PSx				081 125	082 125	083 125	084 125
0.00	0.00	600.00	s				

Parameter				Address			
Default	**Min**	**Max**	**Unit**	**Logic Diagram**			
IDMT3: Hold time neg PSx				081 135	082 135	083 135	084 135
0.00	0.00	600.00	s				
Setting for the hold time for storing the starting time once the starting has dropped out (negative-sequence current system).							
IDMT1: Release neg PSx				081 116	082 116	083 116	084 116
1: Without delay				Fig. 3-133, (p. 3-184)			
IDMT2: Release neg PSx				081 126	082 126	083 126	084 126
1: Without delay							
IDMT3: Release neg PSx				081 136	082 136	083 136	084 136
1: Without delay							
Setting for the reset characteristic (negative-sequence current system).							
IDMT1: Iref,N PSx				081 061	082 061	083 061	084 061
Blocked	0.01	0.80	Inom	Fig. 3-134, (p. 3-185)			
IDMT2: Iref,N PSx				081 181	082 181	083 181	084 181
Blocked	0.01	0.80	Inom				
IDMT3: Iref,N PSx				081 201	082 201	083 201	084 201
Blocked	0.01	0.80	Inom				
Setting for the reference current (residual current system).							
IDMT1: Iref,N dynamic PSx				081 062	082 062	083 062	084 062
Blocked	0.01	0.80	Inom	Fig. 3-134, (p. 3-185)			
IDMT2: Iref,N dynamic PSx				081 182	082 182	083 182	084 182
Blocked	0.01	0.80	Inom				
IDMT3: Iref,N dynamic PSx				081 202	082 202	083 202	084 202
Blocked	0.01	0.80	Inom				
Setting for the reference current (residual current system) in dynamic mode. This operate value is only effective while the hold time for dynamic parameters is elapsing.							
IDMT1: Characteristic N PSx				081 063	082 063	083 063	084 063
0: Definite Time				Fig. 3-134, (p. 3-185)			
IDMT2: Characteristic N PSx				081 183	082 183	083 183	084 183
0: Definite Time							
IDMT3: Characteristic N PSx				081 203	082 203	083 203	084 203
0: Definite Time							
Setting for the tripping characteristic (residual current system).							
IDMT1: Factor kt,N PSx				081 064	082 064	083 064	084 064
1.00	0.05	10.00		Fig. 3-134, (p. 3-185)			

Parameter				Address			
Default	Min	Max	Unit	Logic Diagram			
IDMT2: Factor kt,N PSx				081 184	082 184	083 184	084 184
1.00	0.05	10.00					
IDMT3: Factor kt,N PSx				081 204	082 204	083 204	084 204
1.00	0.05	10.00					
Setting for the kt,N factor of the starting characteristic (residual current system).							
IDMT1: Min. trip t. N PSx				081 067	082 067	083 067	084 067
1.00	0.00	10.00	s	Fig. 3-134, (p. 3-185)			
IDMT2: Min. trip t. N PSx				081 187	082 187	083 187	084 187
1.00	0.00	10.00	s				
IDMT3: Min. trip t. N PSx				081 207	082 207	083 207	084 207
1.00	0.00	10.00	s				
Setting for the minimum trip time characteristic (residual current system).							
IDMT1: Hold time N PSx				081 065	082 065	083 065	084 065
0.00	0.00	600.00	s	Fig. 3-134, (p. 3-185)			
IDMT2: Hold time N PSx				081 185	082 185	083 185	084 185
0.00	0.00	600.00	s				
IDMT3: Hold time N PSx				081 205	082 205	083 205	084 205
0.00	0.00	600.00	s				
Setting for the hold time for storing the starting time once the starting has dropped out (residual current system).							
IDMT1: Release N PSx				081 066	082 066	083 066	084 066
1: Without delay				Fig. 3-134, (p. 3-185)			
IDMT2: Release N PSx				081 186	082 186	083 186	084 186
1: Without delay							
IDMT3: Release N PSx				081 206	082 206	083 206	084 206
1: Without delay							
Setting for the reset characteristic (residual current system).							

Thermal overload protection

Parameter				Address			
Default	Min	Max	Unit	Logic Diagram			
THRM1: Enable PSx				081 070	082 070	083 070	084 070
0: No				Fig. 3-139, (p. 3-190)			
THRM2: Enable PSx				081 090	082 090	083 090	084 090
0: No							
This setting defines the parameter subset in which thermal overload protection is enabled.							
THRM1: Select current PSx				013 184	013 185	013 186	013 187
0: Max. phase current				Fig. 3-141, (p. 3-191)			
THRM2: Select current PSx				013 188	013 189	013 190	013 191
0: Max. phase current							
Depending on this setting the thermal replica is calculated based on either the maximum phase current, or based on the calculated residual current derived from the sum of the phase currents (setting *IN calculated*), or based on the residual current measured at the fourth transformer (setting *IN measured*).							
THRM1: Iref PSx				081 074	082 074	083 074	084 074
1.00	0.05	4.00	Inom	Fig. 3-144, (p. 3-195)			
THRM2: Iref PSx				081 094	082 094	083 094	084 094
1.00	0.05	4.00	Inom				
Setting for the reference current.							
THRM1: Start.fact.OL_RC PSx				081 075	082 075	083 075	084 075
1.15	1.05	1.50		Fig. 3-144, (p. 3-195)			
THRM2: Start.fact.OL_RC PSx				081 095	082 095	083 095	084 095
1.15	1.05	1.50					
Starting factor k must be set in accordance with the maximum permissible continuous thermal current of the protected object: $k=I_{therm,prot.object}/I_{nom,prot.object}$							
THRM1: Tim.const.1,>Ibl PSx				081 082	082 082	083 082	084 082
30.0	1.0	1000.0	min	Fig. 3-144, (p. 3-195)			
THRM2: Tim.const.1,>Ibl PSx				081 102	082 102	083 102	084 102
30.0	1.0	1000.0	min				
Setting for the thermal time constants of the protected object with current flow (Ibl: base line current).							
THRM1: Tim.const.2,<Ibl PSx				081 083	082 083	083 083	084 083
30.0	1.0	1000.0	min	Fig. 3-144, (p. 3-195)			

Parameter				Address			
Default	**Min**	**Max**	**Unit**	**Logic Diagram**			
THRM2: Tim.const.2,<Ibl PSx				081 103	082 103	083 103	084 103
30.0	1.0	1000.0	min				
Setting for the thermal time constants of the protected object without current flow (Ibl: base line current). **Note:** This setting option is only relevant when machines are running. In all other cases, time constant 2 must be set equal to time constant 1.							
THRM1: Max.perm.obj.tmp.PSx				081 077	082 077	083 077	084 077
120	0	300	°C	Fig. 3-144, (p. 3-195)			
THRM2: Max.perm.obj.tmp.PSx				081 097	082 097	083 097	084 097
120	0	300	°C				
Setting for the maximum permissible temperature of the protected object.							
THRM1: Max.perm.cool.tmpPSx				081 080	082 080	083 080	084 080
40	0	70	°C	Fig. 3-144, (p. 3-195)			
THRM2: Max.perm.cool.tmpPSx				081 100	082 100	083 100	084 100
40	0	70	°C				
Setting for the maximum permissible coolant temperature. **Note:** This setting is active only if the coolant temperature is measured via the PT 100 or the 20 mA input.							
THRM1: Select CTA PSx				081 072	082 072	083 072	084 072
0: Default temp. value				Fig. 3-143, (p. 3-194)			
THRM2: Select CTA PSx				081 092	082 092	083 092	084 092
0: Default temp. value							
Select the mode of the coolant temperature acquisition. Select from: ● No data acquisition. A default temperature value is used instead, ● data acquisition via the PT 100 input, ● data acquisition via the 20 mA input.							
THRM1: Default CTA PSx				081 081	082 081	083 081	084 081
40	-40	70	°C	Fig. 3-144, (p. 3-195)			
THRM2: Default CTA PSx				081 101	082 101	083 101	084 101
40	-40	70	°C				
Setting for the coolant temperature to be used for calculation of the trip time if there is no data acquisition for the coolant temperature.							
THRM1: Bl. f. CTA fault PSx				081 073	082 073	083 073	084 073
1: Yes				Fig. 3-143, (p. 3-194)			
THRM2: Bl. f. CTA fault PSx				081 093	082 093	083 093	084 093
1: Yes							
This setting specifies whether the thermal overload protection function will be blocked in the event of faulty coolant temperature acquisition.							

Parameter				Address			
Default	Min	Max	Unit	Logic Diagram			
THRM1: Rel. O/T warning PSx				081 079	082 079	083 079	084 079
95	50	200	%	Fig. 3-144, (p. 3-195)			
THRM2: Rel. O/T warning PSx				081 099	082 099	083 099	084 099
95	50	200	%				
Setting for the operate value of the warning stage.							
THRM1: Rel. O/T trip PSx				081 076	082 076	083 076	084 076
100	50	200	%	Fig. 3-144, (p. 3-195)			
THRM2: Rel. O/T trip PSx				081 096	082 096	083 096	084 096
100	50	200	%				
Setting for the operate value of the trip stage. **Note:** If the operating mode has been set to *Absolute replica*, the setting here will be automatically set to 100% and this parameter will be hidden as far as the local control panel is concerned.							
THRM1: Hysteresis trip PSx				081 078	082 078	083 078	084 078
2	2	30	%	Fig. 3-144, (p. 3-195)			
THRM2: Hysteresis trip PSx				081 098	082 098	083 098	084 098
2	2	30	%				
Setting for the hysteresis of the trip stage.							
THRM1: Warning pre-trip PSx				081 085	082 085	083 085	084 085
30.0	0.0	1000.0	min	Fig. 3-144, (p. 3-195)			
THRM2: Warning pre-trip PSx				081 105	082 105	083 105	084 105
30.0	0.0	1000.0	min				
A warning will be given in advance of the trip. The time difference between the warning time and the trip time is set here.							

Time-voltage protection

Parameter				Address			
Default	Min	Max	Unit	Logic Diagram			
V<>: Enable PSx				076 000	077 000	078 000	079 000
0: No				Fig. 3-146, (p. 3-197)			
This setting defines the setting group in which V<> protection is enabled.							
V<>: V> PSx				076 003	077 003	078 003	079 003
1.10	0.20	1.50	Vnom	Fig. 3-147, (p. 3-198)			
Setting for operate value V>.							
V<>: V>> PSx				076 004	077 004	078 004	079 004
1.10	0.20	1.50	Vnom	Fig. 3-147, (p. 3-198)			
Setting for operate value V>>.							
V<>: tV> PSx				076 005	077 005	078 005	079 005
1.00	0.00	100.00	s	Fig. 3-147, (p. 3-198)			
Setting for the operate delay of overvoltage stage V>.							
V<>: tV>> PSx				076 006	077 006	078 006	079 006
1.00	0.00	100.00	s	Fig. 3-147, (p. 3-198)			
Setting for the operate delay of overvoltage stage V>>.							
V<>: V< PSx				076 007	077 007	078 007	079 007
0.80	0.20	1.50	Vnom	Fig. 3-148, (p. 3-199)			
Setting for operate value V<.							
V<>: V<< PSx				076 008	077 008	078 008	079 008
0.80	0.20	1.50	Vnom	Fig. 3-148, (p. 3-199)			
Setting for operate value V<<.							
V<>: Vmin> PSx				076 046	077 046	078 046	079 046
0.25	0.00	0.60	Vnom	Fig. 3-148, (p. 3-199)			
Setting for the operate value Vmin>.							
V<>: tV< PSx				076 009	077 009	078 009	079 009
1.00	0.00	100.00	s	Fig. 3-148, (p. 3-199)			
Setting for the operate delay of undervoltage stage V<.							
V<>: tV<< PSx				076 010	077 010	078 010	079 010
1.00	0.00	100.00	s	Fig. 3-148, (p. 3-199)			
Setting for the operate delay of undervoltage stage V<<.							
V<>: tTransient PSx				076 029	077 029	078 029	079 029
1.00	0.00	100.00	s	Fig. 3-148, (p. 3-199)			
Setting for the time limit of the signals generated by the undervoltage stages.							

Parameter							Address
Default	**Min**	**Max**	**Unit**				**Logic Diagram**
V<>: Hyst. V<> meas. PSx				076 048	077 048	078 048	079 048
3	1	10	%	Fig. 3-147, (p. 3-198)			
Setting for the hysteresis of the trigger stages for monitoring measured voltages.							

Over-/ underfrequency protection

Parameter				Address			
Default	Min	Max	Unit	Logic Diagram			
f<>: Enable PSx				018 196	018 197	018 198	018 199
0: No				Fig. 3-149, (p. 3-200)			
This setting defines the parameter subset in which over-/underfrequency protection is enabled.							
f<>: Oper. mode f1 PSx				018 120	018 121	018 122	018 123
1: f				Fig. 3-152, (p. 3-203)			
f<>: Oper. mode f2 PSx				018 144	018 145	018 146	018 147
1: f							
f<>: Oper. mode f3 PSx				018 168	018 169	018 170	018 171
1: f							
f<>: Oper. mode f4 PSx				018 192	018 193	018 194	018 195
1: f							
Setting for the operating mode of the timer stages of over-/underfrequency protection.							
f<>: f1 PSx				018 100	018 101	018 102	018 103
49.80	40.00	70.00	Hz	Fig. 3-152, (p. 3-203)			
f<>: f2 PSx				018 124	018 125	018 126	018 127
49.80	40.00	70.00	Hz				
f<>: f3 PSx				018 148	018 149	018 150	018 151
49.80	40.00	70.00	Hz				
f<>: f4 PSx				018 172	018 173	018 174	018 175
49.80	40.00	70.00	Hz				
Setting for the frequency threshold. The over-/underfrequency protection function will operate if one of the following two conditions applies: The threshold is higher than the set nominal frequency and the frequency exceeds this threshold. The threshold is lower than the set nominal frequency and the frequency falls below this threshold. Depending on the chosen operating mode, either a signal is issued without further monitoring, or further monitoring mechanisms are started.							
f<>: tf1 PSx				018 104	018 105	018 106	018 107
0.00	0.00	10.00	s	Fig. 3-152, (p. 3-203)			
f<>: tf2 PSx				018 128	018 129	018 130	018 131
0.00	0.00	10.00	s				
f<>: tf3 PSx				018 152	018 153	018 154	018 155
0.00	0.00	10.00	s				

Parameter				Address			
Default	**Min**	**Max**	**Unit**	**Logic Diagram**			
f<>: tf4 PSx				018 176	018 177	018 178	018 179
0.00	0.00	10.00	s				
Setting for the operate delay of over-/underfrequency protection.							
f<>: df1/dt PSx				018 108	018 109	018 110	018 111
2.0	0.1	10.0	Hz/s	Fig. 3-152, (p. 3-203)			
f<>: df2/dt PSx				018 132	018 133	018 134	018 135
2.0	0.1	10.0	Hz/s				
f<>: df3/dt PSx				018 156	018 157	018 158	018 159
2.0	0.1	10.0	Hz/s				
f<>: df4/dt PSx				018 180	018 181	018 182	018 183
2.0	0.1	10.0	Hz/s				
Setting for the frequency gradient to be monitored. **Note:** This setting is ineffective unless operating mode *f with df/dt* has been selected.							
f<>: Delta f1 PSx				018 112	018 113	018 114	018 115
0.30	0.01	5.00	Hz	Fig. 3-152, (p. 3-203)			
f<>: Delta f2 PSx				018 136	018 137	018 138	018 139
0.30	0.01	5.00	Hz				
f<>: Delta f3 PSx				018 160	018 161	018 162	018 163
0.30	0.01	5.00	Hz				
f<>: Delta f4 PSx				018 184	018 185	018 186	018 187
0.30	0.01	5.00	Hz				
Setting for Delta f. **Note:** This setting is ineffective unless operating mode *f w. Delta f/Delta t* has been selected.							
f<>: Delta t1 PSx				018 116	018 117	018 118	018 119
0.30	0.04	3.00	s	Fig. 3-152, (p. 3-203)			
f<>: Delta t2 PSx				018 140	018 141	018 142	018 143
0.30	0.04	3.00	s				
f<>: Delta t3 PSx				018 164	018 165	018 166	018 167
0.30	0.04	3.00	s				
f<>: Delta t4 PSx				018 188	018 189	018 190	018 191
0.30	0.04	3.00	s				
Setting for Delta t. **Note:** This setting is ineffective unless operating mode *f w. Delta f/Delta t* has been selected.							

Overfluxing protection

Parameter				Address			
Default	Min	Max	Unit	Logic Diagram			
V/f: Enable PSx				081 210	082 210	083 210	084 210
0: No				Fig. 3-153, (p. 3-205)			
This setting defines the parameter subset in which overfluxing protection is enabled.							
V/f: V/f> (alarm) PSx				081 211	082 211	083 211	084 211
1.05	1.00	1.20	Vnom/ fnom				
Setting for the operate value of the warning stage.							
V/f: V/f(t)> PSx				081 212	082 212	083 212	084 212
1.10	1.05	1.50	Vnom/ fnom	Fig. 3-159, (p. 3-209)			
Setting for the operate value of the time-dependent elements.							
V/f: V/f>> PSx				081 213	082 213	083 213	084 213
Blocked	1.05	1.60	Vnom/ fnom	Fig. 3-156, (p. 3-206)			
Setting for the operate value of the time-independent elements.							
V/f: tV/f> PSx				081 214	082 214	083 214	084 214
1	0	10000	s				
Setting for the operate delay of the warning stage.							
V/f: t at V/f=1.05 PSx				081 217	082 217	083 217	084 217
72.8	1.0	6000.0	s	Fig. 3-159, (p. 3-209)			
V/f: t at V/f=1.10 PSx				081 218	082 218	083 218	084 218
18.8	1.0	6000.0	s	Fig. 3-159, (p. 3-209)			
V/f: t at V/f=1.15 PSx				081 219	082 219	083 219	084 219
8.8	1.0	6000.0	s	Fig. 3-159, (p. 3-209)			
V/f: t at V/f=1.20 PSx				081 220	082 220	083 220	084 220
5.3	1.0	6000.0	s	Fig. 3-159, (p. 3-209)			
V/f: t at V/f=1.25 PSx				081 221	082 221	083 221	084 221
3.7	1.0	6000.0	s	Fig. 3-159, (p. 3-209)			
V/f: t at V/f=1.30 PSx				081 222	082 222	083 222	084 222
2.8	1.0	6000.0	s	Fig. 3-159, (p. 3-209)			
V/f: t at V/f=1.35 PSx				081 223	082 223	083 223	084 223
2.3	1.0	6000.0	s	Fig. 3-159, (p. 3-209)			
V/f: t at V/f=1.40 PSx				081 224	082 224	083 224	084 224
1.9	1.0	6000.0	s	Fig. 3-159, (p. 3-209)			
V/f: t at V/f=1.45 PSx				081 225	082 225	083 225	084 225
1.7	1.0	6000.0	s	Fig. 3-159, (p. 3-209)			

Parameter				Address			
Default	**Min**	**Max**	**Unit**	**Logic Diagram**			
V/f: t at V/f=1.50 PSx				081 226	082 226	083 226	084 226
1.5	1.0	6000.0	s	Fig. 3-159, (p. 3-209)			
V/f: t at V/f=1.55 PSx				081 227	082 227	083 227	084 227
1.4	1.0	6000.0	s	Fig. 3-159, (p. 3-209)			
V/f: t at V/f=1.60 PSx				081 228	082 228	083 228	084 228
1.3	1.0	6000.0	s	Fig. 3-159, (p. 3-209)			
The value pairs set here for overfluxing and trip time define the tripping characteristic of the inverse-time trip stage for overfluxing protection. The value set at V/f = 1.60 is also valid for V/f > 1.60.							
V/f: Reset time PSx				081 230	082 230	083 230	084 230
0	0	60000	s	Fig. 3-159, (p. 3-209)			
The value set here for the reset time defines the decreasing rate for the overfluxing protection memory.							
V/f: tV/f>> PSx				081 229	082 229	083 229	084 229
Blocked	0	10000	s	Fig. 3-156, (p. 3-206)			
Setting for the operate delay of the definite-time trip stage.							

Current transformer supervision

Parameter				Address			
Default	**Min**	**Max**	**Unit**	**Logic Diagram**			
CTS: Enable PSx				001 118	001 119	001 120	001 121
0: No				Fig. 3-161, (p. 3-211)			
This setting defines the parameter subset in which current transformer supervision (CTS) is enabled.							
CTS: Ipos> PSx				001 111	001 115	001 116	001 117
0.10	0.05	4.00	Iref	Fig. 3-163, (p. 3-213)			
Setting for operate value Ipos> as a quantity normalized to Iref. (Ipos = positive-sequence current)							
CTS: Ineg/Ipos> PSx				001 102	001 103	001 104	001 105
0.05	0.05	1.00		Fig. 3-163, (p. 3-213)			
CTS: Ineg/Ipos>> PSx				001 122	001 123	001 124	001 125
0.40	0.05	1.00		Fig. 3-163, (p. 3-213)			
Setting for the operate value for the ratio Ineg/Ipos. (Ineg = negative-sequence current, Ipos = positive-sequence current)							
CTS: t(Alarm) PSx				001 126	001 127	001 128	001 129
1.00	0.00	10.00	s	Fig. 3-166, (p. 3-215) Fig. 3-167, (p. 3-216)			
Setting for the operate delay.							
CTS: t(Latch) PSx				001 130	001 131	001 132	001 133
1.00	0.00	10.00	s	Fig. 3-166, (p. 3-215) Fig. 3-167, (p. 3-216)			
Setting for the latching time-delay.							

Measuring-circuit monitoring

Parameter				Address			
Default	Min	Max	Unit	Logic Diagram			
MCM_1: Enable PSx				081 038	082 038	083 038	084 038
0: No							
MCM_2: Enable PSx				081 039	082 039	083 039	084 039
0: No							
MCM_3: Enable PSx				081 040	082 040	083 040	084 040
0: No							
This setting defines the parameter subset in which measuring-circuit monitoring is enabled.							
MCM_1: Ineg/Ipos> PSx				081 042	082 042	083 042	084 042
0.30	0.20	1.00		Fig. 3-169, (p. 3-218)			
MCM_2: Ineg/Ipos> PSx				081 043	082 043	083 043	084 043
0.30	0.20	1.00					
MCM_3: Ineg/Ipos> PSx				081 044	082 044	083 044	084 044
0.30	0.20	1.00					
Setting for the operate value for the ratio I_{neg}/I_{pos}. (I_{neg} = negative-sequence current, I_{pos} = positive-sequence current)							
MCM_1: Operate delay PSx				081 046	082 046	083 046	084 046
5.00	0.10	100.00	s	Fig. 3-169, (p. 3-218)			
MCM_2: Operate delay PSx				081 047	082 047	083 047	084 047
5.00	0.10	100.00	s				
MCM_3: Operate delay PSx				081 048	082 048	083 048	084 048
5.00	0.10	100.00	s				
Setting for the operate delay.							

7.1.3.4 Control

Main function

Parameter						Address
Default	**Min**	**Max**	**Unit**			**Logic Diagram**
MAIN: BI active USER						221 003
1: Yes				Fig. 3-196, (p. 3-244)		
Enabling the bay interlocking function from the local control panel.						
MAIN: SI active USER						221 002
0: No				Fig. 3-196, (p. 3-244)		
Enabling the station interlocking function from the local control panel.						
MAIN: Inp.asg. fct.block.1						221 014
060 000: MAIN: Without function				Fig. 3-65, (p. 3-103)		
MAIN: Inp.asg. fct.block.2						221 022
060 000: MAIN: Without function				Fig. 3-65, (p. 3-103)		
Definition of the binary signals assigned to function block 1 and 2.						
MAIN: Op. delay fct. block						221 029
0	0	60	s	Fig. 3-65, (p. 3-103)		
Setting for the operate delay of the function blocks.						
MAIN: Perm.No.mot.drive op						221 027
15	1	20				
Setting for the permissible motor drive operations within the time interval defined at **MAIN: Mon.time mot.drives**.						
MAIN: Mon.time mot.drives						221 026
15	1	20	min			
Setting for the monitoring time to monitor the number of motor drives.						
MAIN: Cool.time mot.drives						221 028
3	0	10	min			
Setting for the cooling time for motors in motor-operated switchgear.						
MAIN: Mon.time motor relay						221 060
0.10	0.01	2.00	s			
Setting for the monitoring time for the motor relay.						
MAIN: CB1 max. oper. cap.						221 084
1	1	99				
Setting for the maximum number of CB operations for an ARC cycle (or for a limited time period).						

Parameter							Address
Default	**Min**	**Max**	**Unit**				**Logic Diagram**
MAIN: CB1 ready fct.assign							221 085
060 000: MAIN: Without function							
Selecting the event which, when present, will initialize the counter at **MAIN: CB1 act. oper. cap.** with the value at **MAIN: CB1 max. oper. cap.**.							
MAIN: DC op. delay t1							221 240
0.10	0.00	2.00	s				
Setting the delay of the commands CMD_DC1, CMD_DC2 and CMD_DC3.							
MAIN: Cmd.end f.K200 fail.							221 111
1: Yes							
In the case of direct motor control by motor relay K200, this parameter can be set to *Yes* or *No*. If the K200 contacts should not have opened until the end of the command to the motor when the set monitoring time-delay had expired (monitoring via binary signal input –U 706, signal **SIG_1: Signal S012 EXT** as the standard setting) then the direction control contacts are opened if this parameter is set to *Yes*. If this parameter is set to *No* then respective fault signals (**MAIN: K200 fail. cmd. end**, **MAIN: K200 fail. cmd.start**, **MAIN: DEV op.time exceeded**) are issued when the monitoring time-delay has expired and the direction control contacts will remain closed. (Note: This behavior still bears the danger of an undefined switch position!)							
MAIN: DC2/3 release delay							221 242
0.10	0.01	2.00	s				
Setting the delay of the termination of the commands CMD_DC2 and CMD_DC3.							
MAIN: ext.cmd.term. w/o PI							221 115
1: Yes							
Select whether the command CMD_DC3 shall be terminated only by the signal SIG_DC3, or with positive indication of the final switchgear position as well. (Note that in either case, the termination of CMD_DC3 is delayed by the setting **MAIN: DC2/3 release delay**.)							

External device

Parameter						Address
Default	**Min**	**Max**	**Unit**		**Logic Diagram**	
DEV01: Designat. ext. dev.						210 000
0: Not assigned						
DEV02: Designat. ext. dev.						210 050
0: Not assigned						
DEV03: Designat. ext. dev.						210 100
0: Not assigned						
Setting for the designation of the respective external device. Either one of the pre-defined designations or the term *Device Name User* may be selected. In the latter case any text (max 4 characters) may be entered at **DEV01: DEV-Name User** that will be used as the devices' designation. (The same holds for DEV02 etc.)						
DEV01: DEV-Name User						218 101
0:						
DEV02: DEV-Name User						218 102
0:						
DEV03: DEV-Name User						218 103
0:						
Any text (max. 4 characters) may be entered as the devices' name which will then be used as the designation, if the associated parameter **DEV01: Designat. ext. dev.** has been set to *Device Name User*. When instead one of the pre-defined designations is selected at **DEV01: Designat. ext. dev.** it will be used and **DEV01: DEV-Name User** is ignored. A designation with more than 4 characters is internally truncated. (The same holds for DEV02 etc.)						
DEV01: Oper. mode cmd.						210 024
3: Time control				Fig. 3-204, (p. 3-255)		
DEV02: Oper. mode cmd.						210 074
3: Time control						
DEV03: Oper. mode cmd.						210 124
3: Time control						
Selecting the operating mode of the command from long command, short command or time control.						
DEV01: Latching time						210 005
0.00	0.00	5.00	s	Fig. 3-200, (p. 3-250) Fig. 3-206, (p. 3-260) Fig. 3-207, (p. 3-260)		
DEV02: Latching time						210 055
0.00	0.00	5.00	s			

Parameter							Address
Default	**Min**	**Max**	**Unit**			**Logic Diagram**	
DEV03: Latching time							210 105
0.00	0.00	5.00	s				
Setting for the time that a control command is sustained after a switchgear position signal – “Open” or “Closed” – has been received.							
DEV01: Op.time switch. dev.							210 004
20	0	254	s	Fig. 3-199, (p. 3-248) Fig. 3-205, (p. 3-258) Fig. 3-206, (p. 3-260)			
DEV02: Op.time switch. dev.							210 054
20	0	254	s				
DEV03: Op.time switch. dev.							210 104
20	0	254	s				
Setting the operating time for switchgear (switching device).							
DEV01: Gr. assign. debounc.							210 011
1: Group 1				Fig. 3-199, (p. 3-248) Fig. 3-205, (p. 3-258) Fig. 3-211, (p. 3-268)			
DEV02: Gr. assign. debounc.							210 061
1: Group 1							
DEV03: Gr. assign. debounc.							210 111
1: Group 1							
Assigning the external device to one of eight groups for debouncing and chatter suppression.							
DEV01: StartCmdTime superv.							210 007
Blocked	0.1	10.0	s	Fig. 3-205, (p. 3-258)			
DEV02: StartCmdTime superv.							210 057
Blocked	0.1	10.0	s				
DEV03: StartCmdTime superv.							210 107
Blocked	0.1	10.0	s				
This parameter allows for defining a monitoring timer for the begin of a switch command. After sending an Open / Close command, the corresponding timer starts. If the switchgear unit has not reached its intermediate position after this time has elapsed then the command is deactivated and **MAIN: Startcmdtime exceed.** is signaled. In the default setting *blocked* this monitoring is switched off. This is recommended for switchgear units for which it is impossible to detect the intermediate position.							
DEV01: Interm. pos. suppr.							210 012
0: No							

Parameter					Address
Default	Min	Max	Unit	Logic Diagram	
DEV02: Interm. pos. suppr.					210 062
0: No					
DEV03: Interm. pos. suppr.					210 112
0: No					
This setting determines whether the “intermediate position” signal will be suppressed or not, while the switchgear is operating.					
DEV01: Stat.ind.interm.pos.					210 027
0: No				Fig. 3-199, (p. 3-248) Fig. 3-205, (p. 3-258)	
DEV02: Stat.ind.interm.pos.					210 077
0: No					
DEV03: Stat.ind.interm.pos.					210 127
0: No					
This setting determines whether the actual status will be signaled with a 5 s delay after the “Faulty position” signal is issued.					
DEV01: Inp.asg. sw.tr. plug					210 014
060 000: MAIN: Without function				Fig. 3-199, (p. 3-248) Fig. 3-205, (p. 3-258)	
DEV02: Inp.asg. sw.tr. plug					210 064
060 000: MAIN: Without function					
DEV03: Inp.asg. sw.tr. plug					210 114
060 000: MAIN: Without function					
Definition of the binary signal that is used to signal the position (“plugged-in” / “unplugged”) of the switch truck plug.					
DEV01: With gen. trip cmd.1					210 021
0: No				Fig. 3-203, (p. 3-254)	
DEV02: With gen. trip cmd.1					210 071
0: No					
DEV03: With gen. trip cmd.1					210 121
0: No					
This setting specifies whether the circuit breaker will be opened by “general trip command 1” of the protection function. **Note:** This setting is only visible (active) for external devices that are defined as “circuit breakers”. This definition is included in the bay type definitions.					
DEV01: With gen. trip cmd.2					210 022
0: No				Fig. 3-203, (p. 3-254)	
DEV02: With gen. trip cmd.2					210 072
0: No					

Parameter					Address
Default	Min	Max	Unit	Logic Diagram	
DEV03: With gen. trip cmd.2					210 122
0: No					
This setting specifies whether the circuit breaker will be opened by “general trip command 2” of the protection function. **Note:** This setting is only visible (active) for external devices that are defined as “circuit breakers”. This definition is included in the bay type definitions.					
DEV01: With close cmd./prot					210 023
0: No				Fig. 3-203, (p. 3-254)	
DEV02: With close cmd./prot					210 073
0: No					
DEV03: With close cmd./prot					210 123
0: No					
This setting specifies whether the circuit breaker will be closed by the “close command” of the protection function. **Note:** This setting is only visible (active) for external devices that are defined as “circuit breakers”. This definition is included in the bay type definitions.					
DEV01: Inp.asg.el.ctrl.open					210 019
060 000: MAIN: Without function				Fig. 3-200, (p. 3-250)	
DEV02: Inp.asg.el.ctrl.open					210 069
060 000: MAIN: Without function					
DEV03: Inp.asg.el.ctrl.open					210 119
060 000: MAIN: Without function					
This setting defines the binary signal that will be used as the control signal to move the switchgear unit to the open position. **Note:** Only signals that are defined in the DEVxx function groups can be selected.					
DEV01: Inp.asg.el.ctr.close					210 020
060 000: MAIN: Without function				Fig. 3-200, (p. 3-250)	
DEV02: Inp.asg.el.ctr.close					210 070
060 000: MAIN: Without function					
DEV03: Inp.asg.el.ctr.close					210 120
060 000: MAIN: Without function					
This setting defines the binary signal that will be used as the control signal to move the switchgear unit to the “Closed” position. **Note:** Only signals that are defined in the DEVxx function groups can be selected.					
DEV01: Block cmd open					218 120
060 000: MAIN: Without function					

Parameter						Address
Default	Min	Max	Unit			Logic Diagram
DEV02: Block cmd open						218 121
060 000: MAIN: Without function						
DEV03: Block cmd open						218 122
060 000: MAIN: Without function						
Select whether open commands for the switchgear unit shall be blocked.						
DEV01: Block cmd close						218 160
060 000: MAIN: Without function						
DEV02: Block cmd close						218 161
060 000: MAIN: Without function						
DEV03: Block cmd close						218 162
060 000: MAIN: Without function						
Select whether close commands for the switchgear unit shall be blocked.						
DEV01: Oper.count.limit						218 211
Blocked	1	65000				
DEV02: Oper.count.limit						218 212
Blocked	1	65000				
DEV03: Oper.count.limit						218 213
Blocked	1	65000				
Setting a limit value for the number of switching commands for the respective switchgear unit.						
DEV01: Inp. asg. end Open						210 015
060 000: MAIN: Without function						
DEV02: Inp. asg. end Open						210 065
060 000: MAIN: Without function						
DEV03: Inp. asg. end Open						210 115
060 000: MAIN: Without function						
This setting defines the binary signal that will be used to terminate the “Open” command.						
DEV01: Inp. asg. end Close						210 016
060 000: MAIN: Without function						
DEV02: Inp. asg. end Close						210 066
060 000: MAIN: Without function						
DEV03: Inp. asg. end Close						210 116
060 000: MAIN: Without function						
This setting defines the binary signal that will be used to terminate the “Close” command.						

Parameter					Address
Default	Min	Max	Unit	Logic Diagram	
DEV01: Open w/o stat.interl					210 025
0: No				Fig. 3-202, (p. 3-253)	
DEV02: Open w/o stat.interl					210 075
0: No					
DEV03: Open w/o stat.interl					210 125
0: No					
This setting specifies whether switching to “Open” position is permitted without a check by the station interlock function.					
DEV01: Close w/o stat. int.					210 026
0: No				Fig. 3-202, (p. 3-253)	
DEV02: Close w/o stat. int.					210 076
0: No					
DEV03: Close w/o stat. int.					210 126
0: No					
This setting specifies whether switching to “Closed” position is permitted without a check by the station interlock function.					
DEV01: Fct.assig.BIwSI open					210 039
060 000: MAIN: Without function				Fig. 3-201, (p. 3-252)	
DEV02: Fct.assig.BIwSI open					210 089
060 000: MAIN: Without function					
DEV03: Fct.assig.BIwSI open					210 139
060 000: MAIN: Without function					
This setting defines which output will issue the “Open” enable to the interlocking logic when there is “bay interlock with substation interlock”. **Note:** The interlock conditions for bay interlock with station interlock are included in the bay type definitions (see “List of Bay Types” in the Appendix). If the interlock condition is to be modified, this is possible by modifying the corresponding Boolean equation in the interlocking logic or by defining a new interlocking logic equation. Only in the latter case is it necessary to change the function assignment.					
DEV01: Fct.assig.BIwSI clos					210 040
060 000: MAIN: Without function				Fig. 3-201, (p. 3-252)	
DEV02: Fct.assig.BIwSI clos					210 090
060 000: MAIN: Without function					

Parameter					Address
Default	Min	Max	Unit		Logic Diagram
DEV03: Fct.assig.BIwSI clos					210 140
060 000: MAIN: Without function					

This setting defines which output will issue the “Close” enable to the interlocking logic when there is “bay interlock with substation interlock”.

Note: The interlock conditions for bay interlock with station interlock are included in the bay type definitions (see “List of Bay Types” in the Appendix). If the interlock condition is to be modified, this is possible by modifying the corresponding Boolean equation in the interlocking logic or by defining a new interlocking logic equation. Only in the latter case is it necessary to change the function assignment.

DEV01: Fct.asg.BI w/o SI op					210 041
060 000: MAIN: Without function			Fig. 3-201, (p. 3-252)		
DEV02: Fct.asg.BI w/o SI op					210 091
060 000: MAIN: Without function					
DEV03: Fct.asg.BI w/o SI op					210 141
060 000: MAIN: Without function					

This setting defines which output will issue the “Open” enable to the interlocking logic when there is “bay interlock without substation interlock”.

Note: The interlock conditions for bay interlock without station interlock are included in the bay type definitions (see “List of Bay Types” in the Appendix). If the interlock condition is to be modified, this is possible by modifying the corresponding Boolean equation in the interlocking logic or by defining a new interlocking logic equation. Only in the latter case is it necessary to change the function assignment.

DEV01: Fct.asg.BI w/o SI cl					210 042
060 000: MAIN: Without function			Fig. 3-201, (p. 3-252)		
DEV02: Fct.asg.BI w/o SI cl					210 092
060 000: MAIN: Without function					
DEV03: Fct.asg.BI w/o SI cl					210 142
060 000: MAIN: Without function					

This setting defines which output will issue the “Close” enable to the interlocking logic when there is “bay interlock without substation interlock”.

Note: The interlock conditions for bay interlock without station interlock are included in the bay type definitions (see “List of Bay Types” in the Appendix). If the interlock condition is to be modified, this is possible by modifying the corresponding Boolean equation in the interlocking logic or by defining a new interlocking logic equation. Only in the latter case is it necessary to change the function assignment.

Interlocking logic

Parameter						Address
Default	**Min**	**Max**	**Unit**			**Logic Diagram**
ILOCK: Cycle t interl.check						221 104
Blocked	0.1	10.0	s			

The interlock conditions are also transmitted together with reporting in the “phase 2” of the IEC 61850 communication protocol. Therefore it is a requirement that these interlock conditions are cyclically checked and not, as with software versions that still implement “phase 1”, only with the request for a switching operation.

This parameter sets the cycle time, after which a check of the interlock conditions is carried out.

As additional processor capacity must be provided for each of these checks it must be ensured that a favorable compromise is found for the cycle time setting value. On the one hand it is desirable to select a cycle time value which is as short as possible so that changes in the interlock conditions are updated without any notable delays, but on the other hand this cycle time value should not be so short that the P633 will be under too much strain. As the CPU load of the P633 is dependent on the total number of function groups having been configured it is not possible to suggest a generally acceptable cycle time value.

ILOCK: Rset ILOCK violation						221 123
Blocked	1	10	s	Fig. 3-197, (p. 3-245)		

The interlock violation signal (221 018) **MAIN: Interlock equ. viol.** will be automatically reset after the time period set here. (The default value *Blocked* disables the automatic reset.)

ILOCK: Fct.assignm. outp.01						250 000
060 000: MAIN: Without function				Fig. 3-208, (p. 3-263)		
ILOCK: Fct.assignm. outp.02						250 001
060 000: MAIN: Without function						
ILOCK: Fct.assignm. outp.03						250 002
060 000: MAIN: Without function						
ILOCK: Fct.assignm. outp.04						250 003
060 000: MAIN: Without function						
ILOCK: Fct.assignm. outp.05						250 004
060 000: MAIN: Without function						
ILOCK: Fct.assignm. outp.06						250 005
060 000: MAIN: Without function						
ILOCK: Fct.assignm. outp.07						250 006
060 000: MAIN: Without function						
ILOCK: Fct.assignm. outp.08						250 007
060 000: MAIN: Without function						
ILOCK: Fct.assignm. outp.09						250 008
060 000: MAIN: Without function						

Parameter						Address
Default	Min	Max	Unit			Logic Diagram
ILOCK: Fct.assignm. outp.10						250 009
060 000: MAIN: Without function						
ILOCK: Fct.assignm. outp.11						250 010
060 000: MAIN: Without function						
ILOCK: Fct.assignm. outp.12						250 011
060 000: MAIN: Without function						
ILOCK: Fct.assignm. outp.13						250 012
060 000: MAIN: Without function						
ILOCK: Fct.assignm. outp.14						250 013
060 000: MAIN: Without function						
ILOCK: Fct.assignm. outp.15						250 014
060 000: MAIN: Without function						
ILOCK: Fct.assignm. outp.16						250 015
060 000: MAIN: Without function						
ILOCK: Fct.assignm. outp.17						250 016
060 000: MAIN: Without function						
ILOCK: Fct.assignm. outp.18						250 017
060 000: MAIN: Without function						
ILOCK: Fct.assignm. outp.19						250 018
060 000: MAIN: Without function						
ILOCK: Fct.assignm. outp.20						250 019
060 000: MAIN: Without function						
ILOCK: Fct.assignm. outp.21						250 020
060 000: MAIN: Without function						
ILOCK: Fct.assignm. outp.22						250 021
060 000: MAIN: Without function						
ILOCK: Fct.assignm. outp.23						250 022
060 000: MAIN: Without function						
ILOCK: Fct.assignm. outp.24						250 023
060 000: MAIN: Without function						
ILOCK: Fct.assignm. outp.25						250 024
060 000: MAIN: Without function						
ILOCK: Fct.assignm. outp.26						250 025
060 000: MAIN: Without function						
ILOCK: Fct.assignm. outp.27						250 026
060 000: MAIN: Without function						
ILOCK: Fct.assignm. outp.28						250 027
060 000: MAIN: Without function						

Parameter						Address
Default	Min	Max	Unit		Logic Diagram	
ILOCK: Fct.assignm. outp.29						250 028
060 000: MAIN: Without function						
ILOCK: Fct.assignm. outp.30						250 029
060 000: MAIN: Without function						
ILOCK: Fct.assignm. outp.31						250 030
060 000: MAIN: Without function						
ILOCK: Fct.assignm. outp.32						250 031
060 000: MAIN: Without function						
Definition of the interlock conditions.						

8 Information and Control Functions

8.1 Operation

The P633 generates a large number of signals, processes binary input signals, and acquires measured data during fault-free operation of the protected object as well as fault-related data. A number of counters are available for statistical purposes. This information can be read out from the integrated local control panel or via the operating program.

All this information can be found in the “Operation” and “Events” folders in the menu tree.

Note

Detailed information about all parameters, including complete selection tables and IEC 60870-5-103 protocol properties, are separately available as a set of interlinked PDF files for user-friendly navigation, packed in one ZIP archive named DataModelExplorer_P633_en_P01.zip.

A list of the Logical Nodes that have been implemented for the IEC 61850 protocol can be found in a separate document.

8.1.1 Cyclic Values

8.1.1.1 Measured Operating Data

Measured data input

Parameter							Address
Default	Min	Max	Unit				Logic Diagram
MEASI: Current IDC							004 134
Not measured	0.00	24.00	mA	Fig. 3-35, (p. 3-59)			
Display of the input current.							
MEASI: Current IDC p.u.							004 135
Not measured	0.00	1.20	IDC,nom	Fig. 3-35, (p. 3-59)			
Display of the input current referred to $I_{DC,nom}$.							
MEASI: Curr. IDC,lin. p.u.							004 136
Not measured	0.00	1.20	IDC,nom	Fig. 3-35, (p. 3-59)			
Display of the linearized input current referred to $I_{DC,nom}$.							
MEASI: Scaled value IDC,lin							004 180
Not measured	-32000	32000		Fig. 3-36, (p. 3-60)			
Display of the scaled linearized value.							
MEASI: Temperature							004 133
Not measured	-40.0	215.0	°C	Fig. 3-37, (p. 3-61)			
Display of the temperature measured at the “PT 100” temperature input on the analog p/c board.							
MEASI: Temperature p.u.							004 221
Not measured	-0.40	2.15	100°C	Fig. 3-37, (p. 3-61)			
Display of the temperature measured at the “PT 100” temperature input on the analog p/c board referred to 100°C.							
MEASI: Temperature Tmax							004 233
Not measured	-40.0	215.0	°C	Fig. 3-37, (p. 3-61)			
Display of the maximum temperature measured at the “PT 100” temperature input on the analog p/c board.							

Measured data output

Parameter							Address
Default	**Min**	**Max**	**Unit**				**Logic Diagram**
MEASO: Current A-1							005 100
0.00	0.00	20.00	mA	Fig. 3-45, (p. 3-75)			
MEASO: Current A-2							005 099
0.00	0.00	20.00	mA				
Display of the current on the analog measured data output (A1: channel 1; A2: channel 2).							

Main function

Parameter							Address
Default	**Min**	**Max**	**Unit**				**Logic Diagram**
MAIN: Date							003 090
1997-01-01	1997-01-01	2098-11-08	dd.mm.yy	Fig. 3-77, (p. 3-112)			
Date display. The date can also be set here. The centuries are not displayed. The supported dates range from January 1st, 1997, until November 7th, 2098.							
MAIN: Time of day							003 091
00:00:00	00:00:00	24:00:00	hh:mm:ss	Fig. 3-77, (p. 3-112)			
Display of the time of day. The time can also be set here.							
MAIN: Time switching							003 095
0: Standard time				Fig. 3-77, (p. 3-112)			
Setting for standard time or daylight saving time. This setting is necessary in order to avoid misinterpretation of the times assigned to signals and event data that can be read out through the PC or communication interfaces.							
MAIN: Frequency f							004 040
Not measured	40.00	70.00	Hz	Fig. 3-59, (p. 3-96)			
Display of system frequency.							
MAIN: Curr. IP,max,a prim.							005 101
Not measured	0	65000	A	Fig. 3-55, (p. 3-92)			
Display of the maximum phase current as a primary quantity, end a.							
MAIN: IP,max prim.,delay a							005 162
Not measured	0	65000	A	Fig. 3-55, (p. 3-92)			
Display of the delayed maximum current of end a as a primary quantity.							
MAIN: IP,max prim.stored a							005 161
Not measured	0	65000	A	Fig. 3-55, (p. 3-92)			
Display of the delayed stored maximum phase current of end a as a primary quantity.							
MAIN: Curr. IP,max,b prim.							005 102
Not measured	0	65000	A				
Display of the maximum phase current as a primary quantity, end b.							
MAIN: IP,max prim.,delay b							006 162
Not measured	0	65000	A				
Display of the delayed maximum current of end b as a primary quantity.							

Parameter							Address
Default	**Min**	**Max**	**Unit**				**Logic Diagram**
MAIN: IP,max prim.stored b							006 161
Not measured	0	65000	A				
Display of the delayed stored maximum phase current of end b as a primary quantity.							
MAIN: Curr. IP,max,c prim.							005 103
Not measured	0	65000	A				
Display of the maximum phase current as a primary quantity, end c.							
MAIN: IP,max prim.,delay c							007 162
Not measured	0	65000	A				
Display of the delayed maximum current of end c as a primary quantity.							
MAIN: IP,max prim.stored c							007 161
Not measured	0	65000	A				
Display of the delayed stored maximum phase current of end c as a primary quantity.							
MAIN: Curr. IP,min,a prim.							005 104
Not measured	0	65000	A	Fig. 3-55, (p. 3-92)			
Display of the minimum phase current of end a as a primary quantity.							
MAIN: Curr. IP,min,b prim.							005 105
Not measured	0	65000	A				
Display of the minimum phase current of end b as a primary quantity.							
MAIN: Curr. IP,min,c prim.							005 106
Not measured	0	65000	A				
Display of the minimum phase current of end c as a primary quantity.							
MAIN: Current IA,a prim.							005 021
Not measured	0	65000	A	Fig. 3-55, (p. 3-92)			
Display of phase current A, end a, as a primary quantity.							
MAIN: Current IB,a prim.							006 021
Not measured	0	65000	A	Fig. 3-55, (p. 3-92)			
Display of phase current B as a primary quantity, end a.							
MAIN: Current IC,a prim.							007 021
Not measured	0	65000	A	Fig. 3-55, (p. 3-92)			
Display of phase current C as a primary quantity, end a.							
MAIN: Current IA,b prim.							005 022
Not measured	0	65000	A				
Display of phase current A, end b, as a primary quantity.							

Parameter							Address
Default	**Min**	**Max**	**Unit**				**Logic Diagram**
MAIN: Current IB,b prim.							006 022
Not measured	0	65000	A				
Display of phase current B as a primary quantity, end b.							
MAIN: Current IC,b prim.							007 022
Not measured	0	65000	A				
Display of phase current C as a primary quantity, end b.							
MAIN: Current IA,c prim.							005 023
Not measured	0	65000	A				
Display of phase current A, end c, as a primary quantity.							
MAIN: Current IB,c prim.							006 023
Not measured	0	65000	A				
Display of phase current B, end c, as a primary quantity.							
MAIN: Current IC,c prim.							007 023
Not measured	0	65000	A				
Display of phase current C, end c, as a primary quantity.							
MAIN: Current Ineg a prim.							005 125
Not measured	0	65000	A				
MAIN: Current Ineg b prim.							005 129
Not measured	0	65000	A				
MAIN: Current Ineg c prim.							005 136
Not measured	0	65000	A				
Display of the negative-sequence current of the respective end as a primary quantity.							
MAIN: Current Ipos a prim.							005 127
Not measured	0	65000	A				
MAIN: Current Ipos b prim.							005 134
Not measured	0	65000	A				
MAIN: Current Ipos c prim.							005 138
Not measured	0	65000	A				
Display of the positive-sequence current of the respective end as a primary quantity.							
MAIN: Current IN,a prim.							005 121
Not measured	0	65000	A				
MAIN: Current IN,b prim.							005 122
Not measured	0	65000	A				

Parameter							Address
Default	**Min**	**Max**	**Unit**				**Logic Diagram**
MAIN: Current IN,c prim.							005 123
Not measured	0	65000	A				
Display of the residual current calculated by the P633 from the sum of the phase currents (of the respective end) as a primary quantity.							
MAIN: Current IY,a prim.							005 131
Not measured	0	65000	A				
MAIN: Current IY,b prim.							005 132
Not measured	0	65000	A				
MAIN: Current IY,c prim.							005 133
Not measured	0	65000	A				
Display of the current value as a primary quantity measured by the P633 at the T14, T24 or T34 transformers.							
MAIN: Voltage V prim.							005 018
Not measured	0.0	2500.0	kV	Fig. 3-58, (p. 3-96)			
Display of the voltage measured by the P633, as a primary quantity.							
MAIN: Curr. IP,max,a p.u.							005 111
Not measured	0.000	25.000	Inom	Fig. 3-55, (p. 3-92)			
MAIN: Curr. IP,max,b p.u.							005 112
Not measured	0.000	25.000	Inom				
MAIN: Curr. IP,max,c p.u.							005 113
Not measured	0.000	25.000	Inom				
Display of the maximum phase current (of the respective end), referred to I_{nom}.							
MAIN: IP,max p.u.,delay a							005 163
Not measured	0.000	25.000	Inom	Fig. 3-55, (p. 3-92)			
MAIN: IP,max p.u.,delay b							006 163
Not measured	0.000	25.000	Inom				
MAIN: IP,max p.u.,delay c							007 163
Not measured	0.000	25.000	Inom				
Display of the delayed maximum phase current (of the respective end a) referred to I_{nom}.							
MAIN: IP,max p.u.,stored a							005 160
Not measured	0.000	25.000	Inom	Fig. 3-55, (p. 3-92)			
MAIN: IP,max p.u.,stored b							006 160
Not measured	0.000	25.000	Inom				

Parameter							Address
Default	**Min**	**Max**	**Unit**				**Logic Diagram**
MAIN: IP,max p.u.,stored c							007 160
Not measured	0.000	25.000	Inom				
Display of the delayed stored maximum phase current (for the respective end), referred to I_{nom}.							
MAIN: Curr. IP,min,a p.u.							005 107
Not measured	0.000	25.000	Inom	Fig. 3-55, (p. 3-92)			
MAIN: Curr. IP,min,b p.u.							005 108
Not measured	0.000	25.000	Inom				
MAIN: Curr. IP,min,c p.u.							005 109
Not measured	0.000	25.000	Inom				
Display of the minimum phase current (for the respective end) as referred to I_{nom}.							
MAIN: Current IA,a p.u.							005 031
Not measured	0.000	25.000	Inom	Fig. 3-55, (p. 3-92)			
MAIN: Current IB,a p.u.							006 031
Not measured	0.000	25.000	Inom	Fig. 3-55, (p. 3-92)			
MAIN: Current IC,a p.u.							007 031
Not measured	0.000	25.000	Inom	Fig. 3-55, (p. 3-92)			
MAIN: Current IA,b p.u.							005 032
Not measured	0.000	25.000	Inom				
MAIN: Current IB,b p.u.							006 032
Not measured	0.000	25.000	Inom				
MAIN: Current IC,b p.u.							007 032
Not measured	0.000	25.000	Inom				
MAIN: Current IA,c p.u.							005 033
Not measured	0.000	25.000	Inom				
MAIN: Current IB,c p.u.							006 033
Not measured	0.000	25.000	Inom				
MAIN: Current IC,c p.u.							007 033
Not measured	0.000	25.000	Inom				
Display of phase current A/B/C for the respective end, referred to In.							
MAIN: Current Ineg a p.u.							005 126
Not measured	0.000	25.000	Inom				
MAIN: Current Ineg b p.u.							005 130
Not measured	0.000	25.000	Inom				

Parameter							Address
Default	**Min**	**Max**	**Unit**			**Logic Diagram**	
MAIN: Current Ineg c p.u.							005 137
Not measured	0.000	25.000	Inom				
Display of the negative-sequence current of the respective end, referred to I_{nom}.							
MAIN: Current Ipos a p.u.							005 128
Not measured	0.000	25.000	Inom				
MAIN: Current Ipos b p.u.							005 135
Not measured	0.000	25.000	Inom				
MAIN: Current Ipos c p.u.							005 139
Not measured	0.000	25.000	Inom				
Display of the positive-sequence current (for the respective end), referred to I_{nom}.							
MAIN: Current IN,a p.u.							005 141
Not measured	0.000	25.000	Inom				
MAIN: Current IN,b p.u.							005 142
Not measured	0.000	25.000	Inom				
MAIN: Current IN,c p.u.							005 143
Not measured	0.000	25.000	Inom				
Display of the residual current calculated by the P633 from the sum of the phase currents of the respective end, referred to I_{nom}.							
MAIN: Current IY,a p.u.							005 151
Not measured	0.000	25.000	Inom				
MAIN: Current IY,b p.u.							005 152
Not measured	0.000	25.000	Inom				
MAIN: Current IY,c p.u.							005 153
Not measured	0.000	25.000	Inom				
Display of the current value as a quantity referred to I_{nom} measured by the P633 at the T14, T24 or T34 transformers.							
MAIN: IP,max,add p.u.							005 114
Not measured	0.000	25.000	Inom	Fig. 3-57, (p. 3-94)			
Display of the maximum phase current for the virtual end, referred to I_{nom}. The virtual end is formed according to the selection at **MAIN: Current summation**.							
MAIN: IP,min,add p.u.							005 110
Not measured	0.000	25.000	Inom	Fig. 3-57, (p. 3-94)			
Display of the minimum phase current for the virtual end, referred to I_{nom}. The virtual end is formed according to the selection at **MAIN: Current summation**.							

Parameter							Address
Default	**Min**	**Max**	**Unit**				**Logic Diagram**
MAIN: Current IA,add p.u.							005 038
Not measured	0.000	25.000	Inom	Fig. 3-57, (p. 3-94)			
MAIN: Current IB,add p.u.							006 038
Not measured	0.000	25.000	Inom	Fig. 3-57, (p. 3-94)			
MAIN: Current IC,add p.u.							007 038
Not measured	0.000	25.000	Inom	Fig. 3-57, (p. 3-94)			
Display of phase current A, B or C, respectively, for the virtual end, referred to I_{nom}. The virtual end is formed according to the selection at **MAIN: Current summation**.							
MAIN: Curr. Ineg,add p.u.							005 149
Not measured	0.000	25.000	Inom				
Display of negative-sequence current for the virtual end, referred to I_{nom}. The virtual end is formed according to the selection at **MAIN: Current summation**.							
MAIN: Curr. Ipos,add p.u.							005 150
Not measured	0.000	25.000	Inom				
Display of positive-sequence current for the virtual end, referred to I_{nom}. The virtual end is formed according to the selection at **MAIN: Current summation**.							
MAIN: Current IN,add p.u.							005 155
Not measured	0.000	25.000	Inom	Fig. 3-57, (p. 3-94)			
Display of residual current for the virtual end, referred to I_{nom}. The virtual end is formed according to the selection at **MAIN: Current summation**.							
MAIN: Voltage V p.u.							005 019
Not measured	0.000	25.000	Vnom	Fig. 3-58, (p. 3-96)			
Display of the voltage measured by the P633, referred to V_{nom}.							
MAIN: Angle phi AB, end a							005 089
Not measured	-180.0	180.0	°	Fig. 3-60, (p. 3-97)			
Display of the phase shift between A-B, end a.							
MAIN: Angle phi BC, end a							006 089
Not measured	-180.0	180.0	°	Fig. 3-60, (p. 3-97)			
Display of the phase shift between B-C, end a.							
MAIN: Angle phi CA, end a							007 089
Not measured	-180.0	180.0	°	Fig. 3-60, (p. 3-97)			
Display of the phase shift between C-A, end a.							

Parameter							Address
Default	**Min**	**Max**	**Unit**			**Logic Diagram**	
MAIN: Angle phi AB, end b							005 092
Not measured	-180.0	180.0	°	Fig. 3-60, (p. 3-97)			
Display of the phase shift between A-B, end b.							
MAIN: Angle phi BC, end b							006 092
Not measured	-180.0	180.0	°	Fig. 3-60, (p. 3-97)			
Display of the phase shift between B-C, end b.							
MAIN: Angle phi CA, end b							007 092
Not measured	-180.0	180.0	°	Fig. 3-60, (p. 3-97)			
Display of the phase shift between C-A, end b.							
MAIN: Angle phi AB, end c							005 093
Not measured	-180.0	180.0	°	Fig. 3-60, (p. 3-97)			
Display of the phase shift between A-B, end c.							
MAIN: Angle phi BC, end c							006 093
Not measured	-180.0	180.0	°	Fig. 3-60, (p. 3-97)			
Display of the phase shift between B-C, end c.							
MAIN: Angle phi CA, end c							007 093
Not measured	-180.0	180.0	°	Fig. 3-60, (p. 3-97)			
Display of the phase shift between C-A, end c.							
MAIN: Angle phi A, end a-b							005 090
Not measured	-180.0	180.0	°	Fig. 3-61, (p. 3-98)			
Display of the phase shift between ends a and b for phase A.							
MAIN: Angle phi B, end a-b							006 090
Not measured	-180.0	180.0	°	Fig. 3-61, (p. 3-98)			
Display of the phase shift between ends a and b for phase B.							
MAIN: Angle phi C, end a-b							007 090
Not measured	-180.0	180.0	°	Fig. 3-61, (p. 3-98)			
Display of the phase shift between ends a and b for phase C.							
MAIN: Angle phi A, end a-c							005 091
Not measured	-180.0	180.0	°	Fig. 3-61, (p. 3-98)			
Display of the phase shift between ends a and c for phase A.							
MAIN: Angle phi B, end a-c							006 091
Not measured	-180.0	180.0	°	Fig. 3-61, (p. 3-98)			
Display of the phase shift between ends a and c for phase B.							

Parameter					Address
Default	**Min**	**Max**	**Unit**		**Logic Diagram**
MAIN: Angle phi C, end a-c					007 091
Not measured	-180.0	180.0	°	Fig. 3-61, (p. 3-98)	
Display of the phase shift between ends a and c for phase C.					
MAIN: Angle phi NY, end a					005 077
Not measured	-180.0	180.0	°	Fig. 3-62, (p. 3-99)	
MAIN: Angle phi NY, end b					005 078
Not measured	-180.0	180.0	°	Fig. 3-62, (p. 3-99)	
MAIN: Angle phi NY, end c					005 079
Not measured	-180.0	180.0	°	Fig. 3-62, (p. 3-99)	
Display of the phase displacement between the residual current calculated by the P633 from the three phase currents and the current measured at the T14, T24 or T34 transformer.					

Differential protection

Parameter					Address
Default	**Min**	**Max**	**Unit**		**Logic Diagram**
DIFF: Diff. current 1					005 080
Not measured	0.000	40.000	Iref	Fig. 3-110, (p. 3-156)	
Display of differential current, measuring system 1, referred to I_{ref}.					
DIFF: Restrain. current 1					005 081
Not measured	0.000	40.000	Iref	Fig. 3-110, (p. 3-156)	
Display of restraining current, measuring system 1, referred to I_{ref}.					
DIFF: Diff. current 2					006 080
Not measured	0.000	40.000	Iref	Fig. 3-110, (p. 3-156)	
Display of differential current, measuring system 2, referred to I_{ref}.					
DIFF: Restrain. current 2					006 081
Not measured	0.000	40.000	Iref	Fig. 3-110, (p. 3-156)	
Display of restraining current, measuring system 2, referred to I_{ref}.					
DIFF: Diff. current 3					007 080
Not measured	0.000	40.000	Iref	Fig. 3-110, (p. 3-156)	
Display of the differential current for measuring system 1, 2 or 3, respectively, referred to I_{ref}.					
DIFF: Restrain. current 3					007 081
Not measured	0.000	40.000	Iref	Fig. 3-110, (p. 3-156)	
Display of the restraining current for measuring system 1, 2 or 3, respectively, referred to I_{ref}.					

Ground differential protection

Parameter							Address
Default	**Min**	**Max**	**Unit**			**Logic**	**Diagram**
REF_1: Diff. current, REF_1							008 080
Not measured	0.00	20.00	Iref	Fig. 3-116, (p. 3-165)			
REF_2: Diff. current, REF_2							008 070
Not measured	0.00	20.00	Iref				
REF_3: Diff. current, REF_3							008 060
Not measured	0.00	20.00	Iref				
Display of the differential current referred to I_{ref}.							
REF_1: Restrain.curr.,REF_1							008 081
Not measured	0.00	20.00	Iref	Fig. 3-116, (p. 3-165)			
REF_2: Restrain.curr.,REF_2							008 071
Not measured	0.00	20.00	Iref				
REF_3: Restrain.curr.,REF_3							008 061
Not measured	0.00	20.00	Iref				
Display of the restraining current referred to I_{ref}.							

Thermal overload protection

Parameter						Address
Default	**Min**	**Max**	**Unit**			**Logic Diagram**
THRM1: Status replica, TH1						004 150
Not measured	-25000	25000	%	Fig. 3-144, (p. 3-195)		
THRM2: Status replica, TH2						004 175
Not measured	-25000	25000	%			
Display of the buffer content of the thermal overload protection function.						
THRM1: Object temperat.,TH1						004 151
Not measured	-40	300	°C	Fig. 3-144, (p. 3-195)		
THRM2: Object temperat.TH2						004 171
Not measured	-40	300	°C			
Display of the temperature of the protected object as determined by function THRM1 or THRM2.						
THRM1: Coolant temp. TH1						004 154
Not measured	-40	200	°C	Fig. 3-144, (p. 3-195)		
THRM2: Coolant temp. TH2						004 174
Not measured	-40	200	°C			
Display of the coolant temperature of the protected object. Depending on the setting at **THRM1: Select CTA PSx** or **THRM2: Select CTA PSx** for coolant temperature acquisition, one of the following values will be displayed: ● Setting *Default temp. value*: Display of the set temperature value. ● Setting *From PT100*: Display of the temperature measured by the resistance thermometer. ● Setting *From 20 mA input*: Display of the temperature measured via the 20 mA input.						
THRM1: Pre-trip t. left,TH1						004 153
Not measured	0.0	1000.0	min	Fig. 3-144, (p. 3-195)		
THRM2: Pre-trip t. left,TH2						004 173
Not measured	0.0	1000.0	min			
Display of the time remaining before the THRM1 or THRM2 thermal overload protection function reaches the trip threshold.						
THRM1: Stat. repl., p.u.TH1						004 204
Not measured	-25.00	25.00		Fig. 3-144, (p. 3-195)		
THRM2: Stat. repl., p.u.TH2						004 207
Not measured	-25.00	25.00				
Display of the buffer content of the THRM1 or THRM2, respectively, thermal overload protection function referred to a buffer content of 100%.						
THRM1: Object temp. p.u. 1						004 205
Not measured	-0.40	3.00	100°C	Fig. 3-144, (p. 3-195)		

Parameter							Address
Default	**Min**	**Max**	**Unit**				**Logic Diagram**
THRM2: Object temp. p.u. 2							004 208
Not measured	-0.40	3.00	100°C				
Display of the temperature of the protected object as determined by function THRM1 or THRM2, respectively, referred to 100°C.							
THRM1: Coolant temp. p.u. 1							004 206
Not measured	-0.40	2.00	100°C	Fig. 3-144, (p. 3-195)			
THRM2: Coolant temp. p.u. 2							004 209
Not measured	-0.40	2.00	100°C				
Display of the coolant temperature of the protected object referred to 100°C.							
THRM1: Temp. offset repl. 1							004 170
Not measured	-25000	25000	%	Fig. 3-144, (p. 3-195)			
THRM2: Temp. offset repl. 2							004 190
Not measured	-25000	25000	%				
Display of the additional reserve if the coolant temperature is taken into account. This display is relevant if the coolant temperature has been set to a value below the maximum permissible coolant temperature or, in other words, if the thermal model has been shifted downwards. If, on the other hand, the coolant temperature and the maximum permissible coolant temperature have been set to the same value, then the coolant temperature is not taken into account and the characteristic is a function of the current only. The additional reserve amounts to 0 in this case.							

Overfluxing protection

Parameter							Address
Default	**Min**	**Max**	**Unit**				**Logic Diagram**
V/f: Excitation V/f p.u.							004 220
Not measured	0.00	10.00		Fig. 3-154, (p. 3-205)			
Display of the V/f ratio, as a quantity referred to V_{nom}/f_{nom}.							
V/f: Status replica in %							004 222
Not measured	0	100	%	Fig. 3-159, (p. 3-209)			
Display of the buffer content in % of the overfluxing protection function.							
V/f: Status replica p.u.							004 223
Not measured	0.00	1.00		Fig. 3-159, (p. 3-209)			
Display of the buffer content as a quantity referred to 100% of the buffer content of the overfluxing protection function.							

Binary counts

Parameter							Address
Default	**Min**	**Max**	**Unit**				**Logic Diagram**
COUNT: Count 1							217 100
0	0	65535		Fig. 3-215, (p. 3-273)			
COUNT: Count 2							217 080
0	0	65535					
COUNT: Count 3							217 081
0	0	65535					
COUNT: Count 4							217 082
0	0	65535					
Display of the updated count. **Note:** The count value can be set here (Preload-Function).							

8.1.1.2 Physical State Signals

Generic Object Orientated Substation Events

Parameter						Address
Default	Min	Max	Unit			Logic Diagram
GOOSE: Input 1 state						106 200
0: 0						
GOOSE: Input 2 state						106 201
0: 0						
GOOSE: Input 3 state						106 202
0: 0						
GOOSE: Input 4 state						106 203
0: 0						
GOOSE: Input 5 state						106 204
0: 0						
GOOSE: Input 6 state						106 205
0: 0						
GOOSE: Input 7 state						106 206
0: 0						
GOOSE: Input 8 state						106 207
0: 0						
GOOSE: Input 9 state						106 208
0: 0						
GOOSE: Input 10 state						106 209
0: 0						
GOOSE: Input 11 state						106 210
0: 0						
GOOSE: Input 12 state						106 211
0: 0						
GOOSE: Input 13 state						106 212
0: 0						
GOOSE: Input 14 state						106 213
0: 0						
GOOSE: Input 15 state						106 214
0: 0						
GOOSE: Input 16 state						106 215
0: 0						
GOOSE: Input 17 state						106 216
0: 0						

Parameter						Address
Default	Min	Max	Unit			Logic Diagram
GOOSE: Input 18 state						106 217
0: 0						
GOOSE: Input 19 state						106 218
0: 0						
GOOSE: Input 20 state						106 219
0: 0						
GOOSE: Input 21 state						106 220
0: 0						
GOOSE: Input 22 state						106 221
0: 0						
GOOSE: Input 23 state						106 222
0: 0						
GOOSE: Input 24 state						106 223
0: 0						
GOOSE: Input 25 state						106 224
0: 0						
GOOSE: Input 26 state						106 225
0: 0						
GOOSE: Input 27 state						106 226
0: 0						
GOOSE: Input 28 state						106 227
0: 0						
GOOSE: Input 29 state						106 228
0: 0						
GOOSE: Input 30 state						106 229
0: 0						
GOOSE: Input 31 state						106 230
0: 0						
GOOSE: Input 32 state						106 231
0: 0						
GOOSE: Input 33 state						112 100
0: 0						
GOOSE: Input 34 state						112 101
0: 0						
GOOSE: Input 35 state						112 102
0: 0						
GOOSE: Input 36 state						112 103
0: 0						

Parameter						Address
Default	Min	Max	Unit		Logic Diagram	
GOOSE: Input 37 state						112 104
0: 0						
GOOSE: Input 38 state						112 105
0: 0						
GOOSE: Input 39 state						112 106
0: 0						
GOOSE: Input 40 state						112 107
0: 0						
GOOSE: Input 41 state						112 108
0: 0						
GOOSE: Input 42 state						112 109
0: 0						
GOOSE: Input 43 state						112 110
0: 0						
GOOSE: Input 44 state						112 111
0: 0						
GOOSE: Input 45 state						112 112
0: 0						
GOOSE: Input 46 state						112 113
0: 0						
GOOSE: Input 47 state						112 114
0: 0						
GOOSE: Input 48 state						112 115
0: 0						
GOOSE: Input 49 state						112 116
0: 0						
GOOSE: Input 50 state						112 117
0: 0						
GOOSE: Input 51 state						112 118
0: 0						
GOOSE: Input 52 state						112 119
0: 0						
GOOSE: Input 53 state						112 120
0: 0						
GOOSE: Input 54 state						112 121
0: 0						
GOOSE: Input 55 state						112 122
0: 0						

Parameter						Address
Default	Min	Max	Unit			Logic Diagram
GOOSE: Input 56 state						112 123
0: 0						
GOOSE: Input 57 state						112 124
0: 0						
GOOSE: Input 58 state						112 125
0: 0						
GOOSE: Input 59 state						112 126
0: 0						
GOOSE: Input 60 state						112 127
0: 0						
GOOSE: Input 61 state						112 128
0: 0						
GOOSE: Input 62 state						112 129
0: 0						
GOOSE: Input 63 state						112 130
0: 0						
GOOSE: Input 64 state						112 131
0: 0						
GOOSE: Input 65 state						112 132
0: 0						
GOOSE: Input 66 state						112 133
0: 0						
GOOSE: Input 67 state						112 134
0: 0						
GOOSE: Input 68 state						112 135
0: 0						
GOOSE: Input 69 state						112 136
0: 0						
GOOSE: Input 70 state						112 137
0: 0						
GOOSE: Input 71 state						112 138
0: 0						
GOOSE: Input 72 state						112 139
0: 0						
GOOSE: Input 73 state						112 140
0: 0						
GOOSE: Input 74 state						112 141
0: 0						

Parameter						Address
Default	Min	Max	Unit		Logic Diagram	
GOOSE: Input 75 state						112 142
0: 0						
GOOSE: Input 76 state						112 143
0: 0						
GOOSE: Input 77 state						112 144
0: 0						
GOOSE: Input 78 state						112 145
0: 0						
GOOSE: Input 79 state						112 146
0: 0						
GOOSE: Input 80 state						112 147
0: 0						
GOOSE: Input 81 state						112 148
0: 0						
GOOSE: Input 82 state						112 149
0: 0						
GOOSE: Input 83 state						112 150
0: 0						
GOOSE: Input 84 state						112 151
0: 0						
GOOSE: Input 85 state						112 152
0: 0						
GOOSE: Input 86 state						112 153
0: 0						
GOOSE: Input 87 state						112 154
0: 0						
GOOSE: Input 88 state						112 155
0: 0						
GOOSE: Input 89 state						112 156
0: 0						
GOOSE: Input 90 state						112 157
0: 0						
GOOSE: Input 91 state						112 158
0: 0						
GOOSE: Input 92 state						112 159
0: 0						
GOOSE: Input 93 state						112 160
0: 0						

Parameter						Address
Default	Min	Max	Unit			Logic Diagram
GOOSE: Input 94 state						112 161
0: 0						
GOOSE: Input 95 state						112 162
0: 0						
GOOSE: Input 96 state						112 163
0: 0						
GOOSE: Input 97 state						112 164
0: 0						
GOOSE: Input 98 state						112 165
0: 0						
GOOSE: Input 99 state						112 166
0: 0						
GOOSE: Input 100 state						112 167
0: 0						
GOOSE: Input 101 state						112 168
0: 0						
GOOSE: Input 102 state						112 169
0: 0						
GOOSE: Input 103 state						112 170
0: 0						
GOOSE: Input 104 state						112 171
0: 0						
GOOSE: Input 105 state						112 172
0: 0						
GOOSE: Input 106 state						112 173
0: 0						
GOOSE: Input 107 state						112 174
0: 0						
GOOSE: Input 108 state						112 175
0: 0						
GOOSE: Input 109 state						112 176
0: 0						
GOOSE: Input 110 state						112 177
0: 0						
GOOSE: Input 111 state						112 178
0: 0						
GOOSE: Input 112 state						112 179
0: 0						

Parameter						Address
Default	Min	Max	Unit		Logic Diagram	
GOOSE: Input 113 state						112 180
0: 0						
GOOSE: Input 114 state						112 181
0: 0						
GOOSE: Input 115 state						112 182
0: 0						
GOOSE: Input 116 state						112 183
0: 0						
GOOSE: Input 117 state						112 184
0: 0						
GOOSE: Input 118 state						112 185
0: 0						
GOOSE: Input 119 state						112 186
0: 0						
GOOSE: Input 120 state						112 187
0: 0						
GOOSE: Input 121 state						112 188
0: 0						
GOOSE: Input 122 state						112 189
0: 0						
GOOSE: Input 123 state						112 190
0: 0						
GOOSE: Input 124 state						112 191
0: 0						
GOOSE: Input 125 state						112 192
0: 0						
GOOSE: Input 126 state						112 193
0: 0						
GOOSE: Input 127 state						112 194
0: 0						
GOOSE: Input 128 state						112 195
0: 0						
Display of the virtual binary GOOSE input state.						

Virtual Inputs

Parameter						Address
Default	Min	Max	Unit			Logic Diagram
VINP: Input 1 state						115 010
0: 0						
VINP: Input 2 state						115 011
0: 0						
VINP: Input 3 state						115 012
0: 0						
VINP: Input 4 state						115 013
0: 0						
VINP: Input 5 state						115 014
0: 0						
VINP: Input 6 state						115 015
0: 0						
VINP: Input 7 state						115 016
0: 0						
VINP: Input 8 state						115 017
0: 0						
VINP: Input 9 state						115 018
0: 0						
VINP: Input 10 state						115 019
0: 0						
VINP: Input 11 state						115 020
0: 0						
VINP: Input 12 state						115 021
0: 0						
VINP: Input 13 state						115 022
0: 0						
VINP: Input 14 state						115 023
0: 0						
VINP: Input 15 state						115 024
0: 0						
VINP: Input 16 state						115 025
0: 0						
VINP: Input 17 state						115 026
0: 0						
VINP: Input 18 state						115 027
0: 0						
VINP: Input 19 state						115 028
0: 0						

Parameter						Address
Default	Min	Max	Unit		Logic Diagram	
VINP: Input 20 state						115 029
0: 0						
VINP: Input 21 state						115 030
0: 0						
VINP: Input 22 state						115 031
0: 0						
VINP: Input 23 state						115 032
0: 0						
VINP: Input 24 state						115 033
0: 0						
VINP: Input 25 state						115 034
0: 0						
VINP: Input 26 state						115 035
0: 0						
VINP: Input 27 state						115 036
0: 0						
VINP: Input 28 state						115 037
0: 0						
VINP: Input 29 state						115 038
0: 0						
VINP: Input 30 state						115 039
0: 0						
VINP: Input 31 state						115 040
0: 0						
VINP: Input 32 state						115 041
0: 0						
VINP: Input 33 state						115 042
0: 0						
VINP: Input 34 state						115 043
0: 0						
VINP: Input 35 state						115 044
0: 0						
VINP: Input 36 state						115 045
0: 0						
VINP: Input 37 state						115 046
0: 0						
VINP: Input 38 state						115 047
0: 0						

Parameter						Address
Default	Min	Max	Unit			Logic Diagram
VINP: Input 39 state						115 048
0: 0						
VINP: Input 40 state						115 049
0: 0						
VINP: Input 41 state						115 050
0: 0						
VINP: Input 42 state						115 051
0: 0						
VINP: Input 43 state						115 052
0: 0						
VINP: Input 44 state						115 053
0: 0						
VINP: Input 45 state						115 054
0: 0						
VINP: Input 46 state						115 055
0: 0						
VINP: Input 47 state						115 056
0: 0						
VINP: Input 48 state						115 057
0: 0						
VINP: Input 49 state						115 058
0: 0						
VINP: Input 50 state						115 059
0: 0						
VINP: Input 51 state						115 060
0: 0						
VINP: Input 52 state						115 061
0: 0						
VINP: Input 53 state						115 062
0: 0						
VINP: Input 54 state						115 063
0: 0						
VINP: Input 55 state						115 064
0: 0						
VINP: Input 56 state						115 065
0: 0						
VINP: Input 57 state						115 066
0: 0						

Parameter						Address
Default	Min	Max	Unit		Logic Diagram	
VINP: Input 58 state						115 067
0: 0						
VINP: Input 59 state						115 068
0: 0						
VINP: Input 60 state						115 069
0: 0						
VINP: Input 61 state						115 070
0: 0						
VINP: Input 62 state						115 071
0: 0						
VINP: Input 63 state						115 072
0: 0						
VINP: Input 64 state						115 073
0: 0						

Configurable function keys

Parameter						Address
Default	Min	Max	Unit		Logic Diagram	
F_KEY: State F1						080 122
0: "Off"						
F_KEY: State F2						080 123
0: "Off"						
F_KEY: State F3						080 124
0: "Off"						
F_KEY: State F4						080 125
0: "Off"						
F_KEY: State F5						080 126
0: "Off"						
F_KEY: State F6						080 127
0: "Off"						

The state of the function keys is displayed as follows:

- *Without function*: No functions are assigned to the function key.
- "*Off*": The function key is in the “Off” position.
- "*On*": The function key is in the “On” position.

Binary input

Parameter						Address
Default	Min	Max	Unit			Logic Diagram
INP: State U 901						152 144
0: "Low"						
INP: State U 902						152 147
0: "Low"						
INP: State U 903						152 150
0: "Low"						
INP: State U 904						152 153
0: "Low"						
INP: State U 1001						152 162
0: "Low"						
INP: State U 1002						152 165
0: "Low"						
INP: State U 1003						152 168
0: "Low"						
INP: State U 1004						152 171
0: "Low"						
INP: State U 1005						152 174
0: "Low"						
INP: State U 1006						152 177
0: "Low"						
INP: State U 1201						152 198
0: "Low"						
INP: State U 1202						152 201
0: "Low"						
INP: State U 1203						152 204
0: "Low"						
INP: State U 1204						152 207
0: "Low"						
INP: State U 1401						190 001
0: "Low"						
INP: State U 1402						190 005
0: "Low"						
INP: State U 1403						190 009
0: "Low"						
INP: State U 1404						190 013
0: "Low"						
INP: State U 1405						190 017
0: "Low"						

Parameter						Address
Default	Min	Max	Unit		Logic Diagram	
INP: State U 1406						190 021
0: "Low"						
INP: State U 1407						190 025
0: "Low"						
INP: State U 1408						190 029
0: "Low"						
INP: State U 1409						190 033
0: "Low"						
INP: State U 1410						190 037
0: "Low"						
INP: State U 1411						190 041
0: "Low"						
INP: State U 1412						190 045
0: "Low"						
INP: State U 1413						190 049
0: "Low"						
INP: State U 1414						190 053
0: "Low"						
INP: State U 1415						190 057
0: "Low"						
INP: State U 1416						190 061
0: "Low"						
INP: State U 1417						190 065
0: "Low"						
INP: State U 1418						190 069
0: "Low"						
INP: State U 1419						190 073
0: "Low"						
INP: State U 1420						190 077
0: "Low"						
INP: State U 1421						190 081
0: "Low"						
INP: State U 1422						190 085
0: "Low"						
INP: State U 1423						190 089
0: "Low"						
INP: State U 1424						190 093
0: "Low"						

Parameter						Address
Default	Min	Max	Unit			Logic Diagram
INP: State U 1601						192 001
0: "Low"						
INP: State U 1602						192 005
0: "Low"						
INP: State U 1603						192 009
0: "Low"						
INP: State U 1604						192 013
0: "Low"						
INP: State U 1605						192 017
0: "Low"						
INP: State U 1606						192 021
0: "Low"						
INP: State U 1801						194 001
0: "Low"						
INP: State U 1802						194 005
0: "Low"						
INP: State U 1803						194 009
0: "Low"						
INP: State U 1804						194 013
0: "Low"						
INP: State U 1805						194 017
0: "Low"						
INP: State U 1806						194 021
0: "Low"						
INP: State U 2001						153 086
0: "Low"						
INP: State U 2002						153 089
0: "Low"						
INP: State U 2003						153 092
0: "Low"						
INP: State U 2004						153 095
0: "Low"						

The state of the binary signal inputs is displayed as follows:

- *Without function*: No functions are assigned to the binary signal input.
- "*Low*": Not energized.
- "*High*": Energized.

This display appears regardless of the setting for the binary signal input mode.

Binary and analog output

Parameter							Address
Default	Min	Max	Unit			Logic	Diagram
OUTP: State K 901							150 192
0: Inactive							
OUTP: State K 902							150 195
0: Inactive							
OUTP: State K 903							150 198
0: Inactive							
OUTP: State K 904							150 201
0: Inactive							
OUTP: State K 905							150 204
0: Inactive							
OUTP: State K 906							150 207
0: Inactive							
OUTP: State K 907							150 210
0: Inactive							
OUTP: State K 908							150 213
0: Inactive							
OUTP: State K 1001							150 216
0: Inactive							
OUTP: State K 1002							150 219
0: Inactive							
OUTP: State K 1003							150 222
0: Inactive							
OUTP: State K 1004							150 225
0: Inactive							
OUTP: State K 1005							150 228
0: Inactive							
OUTP: State K 1006							150 231
0: Inactive							
OUTP: State K 1007							150 234
0: Inactive							
OUTP: State K 1008							150 237
0: Inactive							
OUTP: State K 1201							151 008
0: Inactive							
OUTP: State K 1202							151 011
0: Inactive							

Parameter						Address
Default	Min	Max	Unit			Logic Diagram
OUTP: State K 1601						171 001
0: Inactive						
OUTP: State K 1602						171 005
0: Inactive						
OUTP: State K 1603						171 009
0: Inactive						
OUTP: State K 1604						171 013
0: Inactive						
OUTP: State K 1605						171 017
0: Inactive						
OUTP: State K 1606						171 021
0: Inactive						
OUTP: State K 1607						171 025
0: Inactive						
OUTP: State K 1608						171 029
0: Inactive						
OUTP: State K 1801						173 001
0: Inactive						
OUTP: State K 1802						173 005
0: Inactive						
OUTP: State K 1803						173 009
0: Inactive						
OUTP: State K 1804						173 013
0: Inactive						
OUTP: State K 1805						173 017
0: Inactive						
OUTP: State K 1806						173 021
0: Inactive						
OUTP: State K 2001						151 200
0: Inactive						
OUTP: State K 2002						151 203
0: Inactive						
OUTP: State K 2003						151 206
0: Inactive						
OUTP: State K 2004						151 209
0: Inactive						
OUTP: State K 2005						151 212
0: Inactive						

Parameter						Address
Default	Min	Max	Unit		Logic Diagram	
OUTP: State K 2006						151 215
0: Inactive						
OUTP: State K 2007						151 218
0: Inactive						
OUTP: State K 2008						151 221
0: Inactive						

The state of the output relays is displayed as follows:

- *Without function*: No functions are assigned to the output relay.
- *Inactive*: The output relay is not energized.
- *Active*: The output relay is energized.

This display appears regardless of the operating mode set for the output relay.

LED indicators

Parameter						Address
Default	Min	Max	Unit			Logic Diagram
LED: State H 1 green						085 180
1: Active						
LED: State H 2 yell.						085 000
0: Inactive						
LED: State H 3 yell.						085 003
0: Inactive						
LED: State H 4 red						085 006
0: Inactive						
LED: State H 5 red						085 009
0: Inactive						
LED: State H 6 red						085 012
0: Inactive						
LED: State H 7 red						085 015
0: Inactive						
LED: State H 8 red						085 018
0: Inactive						
LED: State H 9 red						085 021
0: Inactive						
LED: State H10 red						085 024
0: Inactive						
LED: State H11 red						085 027
0: Inactive						
LED: State H12 red						085 030
0: Inactive						
LED: State H13 red						085 033
0: Inactive						
LED: State H14 red						085 036
0: Inactive						
LED: State H15 red						085 039
0: Inactive						
LED: State H16 red						085 042
0: Inactive						
LED: State H17 red.						085 181
0: Inactive						
LED: State H18 red						085 130
0: Inactive						
LED: State H19 red						085 133
0: Inactive						

Parameter						Address
Default	Min	Max	Unit		Logic Diagram	
LED: State H20 red						085 136
0: Inactive						
LED: State H21 red						085 139
0: Inactive						
LED: State H22 red						085 142
0: Inactive						
LED: State H23 red						085 145
0: Inactive						
LED: State H 4 green						085 056
0: Inactive						
LED: State H 5 green						085 059
0: Inactive						
LED: State H 6 green						085 062
0: Inactive						
LED: State H 7 green						085 065
0: Inactive						
LED: State H 8 green						085 068
0: Inactive						
LED: State H 9 green						085 071
0: Inactive						
LED: State H10 green						085 074
0: Inactive						
LED: State H11 green						085 077
0: Inactive						
LED: State H12 green						085 080
0: Inactive						
LED: State H13 green						085 083
0: Inactive						
LED: State H14 green						085 086
0: Inactive						
LED: State H15 green						085 089
0: Inactive						
LED: State H16 green						085 092
0: Inactive						
LED: State H18 green						085 160
0: Inactive						
LED: State H19 green						085 163
0: Inactive						

Parameter						Address
Default	Min	Max	Unit			Logic Diagram
LED: State H20 green						085 166
0: Inactive						
LED: State H21 green						085 169
0: Inactive						
LED: State H22 green						085 172
0: Inactive						
LED: State H23 green						085 176
0: Inactive						

The state of the LED indicators is displayed as follows:

- *Inactive*: The LED indicator is not energized.
- *Active*: The LED indicator is energized.

8.1.1.3 Logic State Signals

Cyber Security

Parameter					Address
Default	Min	Max	Unit		Logic Diagram
CS: HMI pincode changed					180 100
0: No					
The signal shows the PIN code of HMI is changed.					
CS: COMM passw. change					180 101
0: No					
The signal shows the password of communication interface is changed.					
CS: HMI pincode invalid					180 102
0: No					
The signal shows the PIN code via HMI is invalid.					
CS: COMM passw. invalid					180 103
0: No					
The signal shows the password via communication interface is invalid.					
CS: reset token generate					180 104
0: No					
The signal shows the reset token is generated.					
CS: RBAC reset success					180 105
0: No					
Display when the RBAC reset is successful.					
CS: RBAC reset failed					180 106
0: No					
Display when the RBAC reset is failed.					
CS: User01 blocked					180 107
0: No					
CS: User02 blocked					180 108
0: No					
CS: User03 blocked					180 109
0: No					
CS: User04 blocked					180 110
0: No					
CS: User05 blocked					180 111
0: No					
CS: User06 blocked					180 112
0: No					

Parameter						Address
Default	Min	Max	Unit			Logic Diagram
CS: User07 blocked						180 113
0: No						
CS: User08 blocked						180 114
0: No						
CS: User09 blocked						180 115
0: No						
CS: User10 blocked						180 116
0: No						
CS: User11 blocked						180 117
0: No						
CS: User12 blocked						180 118
0: No						
CS: User13 blocked						180 119
0: No						
CS: User14 blocked						180 120
0: No						
CS: User15 blocked						180 121
0: No						
The signal shows the user is blocked.						
CS: HMI logged in						180 122
0: No						
The signal shows the user is logged in via HMI.						
CS: COMMS logged in						180 123
0: No						
The signal shows the user is logged in via communication interface.						
CS: IEC CS brick faulty						180 124
1: Yes						

Local control panel

Parameter						Address
Default	Min	Max	Unit		Logic Diagram	
LOC: Edit mode						080 111
0: No						
Signal that the protection unit is in edit mode. As a standard this signal is linked to **LED: Fct.assig. H17 red**.						
LOC: Trig. menu jmp 1 EXT						030 230
0: No						
Signal that menu jump list 1 is being triggered. (See the corresponding setting at **LOC: Fct. menu jmp list 1**.)						
LOC: Trig. menu jmp 2 EXT						030 231
0: No						
Signal that menu jump list 2 is being triggered. (See the corresponding setting at **LOC: Fct. menu jmp list 2**.)						
LOC: Illumination on EXT						037 101
1: Yes						
This signal shows that the backlighting for the front panel LCD is switched on.						
LOC: Loc.acc.block.active						221 005
0: No				Fig. 3-8, (p. 3-12)		
LOC: Rem.acc.block.active						221 004
0: No				Fig. 3-8, (p. 3-12)		

“Logical” communication interface 1

Parameter						Address
Default	Min	Max	Unit			Logic Diagram
COMM1: Command block. EXT						003 173
0: No						
COMM1: Sig./meas. block EXT						037 074
0: No						
COMM1: Command blocking						003 174
0: No				Fig. 3-10, (p. 3-16)		
COMM1: Sig./meas.val.block.						037 075
0: No				Fig. 3-11, (p. 3-17) Fig. 3-12, (p. 3-18) Fig. 3-13, (p. 3-19)		
COMM1: IEC 870-5-103						003 219
0: No						
COMM1: IEC 870-5-101						003 218
0: No						
COMM1: IEC 870-5,ILS						003 221
0: No						
COMM1: MODBUS						003 223
0: No						
COMM1: DNP3						003 230
0: No						
COMM1: COURIER						103 041
0: No						

IEC 61850 Communication

Parameter						Address
Default	Min	Max	Unit		Logic Diagram	
IEC: Command block. EXT						104 086
0: No						
IEC: Sig./meas. block EXT						104 089
0: No						
IEC: Multiple ctrl level						221 124
0: No						
Display when control from multiple levels is allowed, i.e. (225 208) **LOC: Fct. assign. L/R key** is set to *R & L <-> L*, and relay is in 'R&L' mode.						
IEC: Command blocking						104 087
0: No						
IEC: Sig./meas.val.block.						104 090
0: No						
IEC: Port A/B blocked						104 075
0: No						
Display when Port A for SEB or Port A&B for REB is blocked.						
IEC: Port C blocked						104 076
0: No						
Display when Port C is blocked.						
IEC: Port A faulty						104 197
0: No						
IEC: Port B faulty						104 198
0: No						
IEC: IEC 61850 ED2						104 081
0: No						
IEC: IEC 61850 ED1						104 082
0: No						
IEC: IEC 60870-5-104						104 083
0: No						
IEC: VLAN enabled						104 196
0: No						
IEC: Comm. link faulty						105 180
0: No					Fig. 3-23, (p. 3-44)	
Display when an Ethernet module is not operational, i.e. if the MAC address is missing or there is a non-plausible parameter setting.						

Parameter					Address
Default	**Min**	**Max**	**Unit**		**Logic Diagram**
IEC: Control reservation					221 082
0: No					
Display when a client has made a reservation to control an external device (“select” for control by control mode “select before operate”).					
IEC: Control blocked					221 126
0: No				Fig. 3-23, (p. 3-44)	
Display when control via communication is blocked, i.e. (221 125) **IEC: Ctrl blocked user** is set to *Yes*.					

Generic Object Orientated Substation Events

Parameter						Address
Default	Min	Max	Unit		Logic	Diagram
GOOSE: Ext.Dev01 position						109 000
0: Interm. pos.						
GOOSE: Ext.Dev02 position						109 005
0: Interm. pos.						
GOOSE: Ext.Dev03 position						109 010
0: Interm. pos.						
GOOSE: Ext.Dev04 position						109 015
0: Interm. pos.						
GOOSE: Ext.Dev05 position						109 020
0: Interm. pos.						
GOOSE: Ext.Dev06 position						109 025
0: Interm. pos.						
GOOSE: Ext.Dev07 position						109 030
0: Interm. pos.						
GOOSE: Ext.Dev08 position						109 035
0: Interm. pos.						
GOOSE: Ext.Dev09 position						109 040
0: Interm. pos.						
GOOSE: Ext.Dev10 position						109 045
0: Interm. pos.						
GOOSE: Ext.Dev11 position						109 050
0: Interm. pos.						
GOOSE: Ext.Dev12 position						109 055
0: Interm. pos.						
GOOSE: Ext.Dev13 position						109 060
0: Interm. pos.						
GOOSE: Ext.Dev14 position						109 065
0: Interm. pos.						
GOOSE: Ext.Dev15 position						109 070
0: Interm. pos.						
GOOSE: Ext.Dev16 position						109 075
0: Interm. pos.						
GOOSE: Ext.Dev17 position						109 100
0: Interm. pos.						
GOOSE: Ext.Dev18 position						109 105
0: Interm. pos.						

Parameter						Address
Default	Min	Max	Unit			Logic Diagram
GOOSE: Ext.Dev19 position						109 110
0: Interm. pos.						
GOOSE: Ext.Dev20 position						109 115
0: Interm. pos.						
GOOSE: Ext.Dev21 position						109 120
0: Interm. pos.						
GOOSE: Ext.Dev22 position						109 125
0: Interm. pos.						
GOOSE: Ext.Dev23 position						109 130
0: Interm. pos.						
GOOSE: Ext.Dev24 position						109 135
0: Interm. pos.						
GOOSE: Ext.Dev25 position						109 140
0: Interm. pos.						
GOOSE: Ext.Dev26 position						109 145
0: Interm. pos.						
GOOSE: Ext.Dev27 position						109 150
0: Interm. pos.						
GOOSE: Ext.Dev28 position						109 155
0: Interm. pos.						
GOOSE: Ext.Dev29 position						109 160
0: Interm. pos.						
GOOSE: Ext.Dev30 position						109 165
0: Interm. pos.						
GOOSE: Ext.Dev31 position						109 170
0: Interm. pos.						
GOOSE: Ext.Dev32 position						109 175
0: Interm. pos.						
GOOSE: Ext.Dev33 position						113 000
0: Interm. pos.						
GOOSE: Ext.Dev34 position						113 004
0: Interm. pos.						
GOOSE: Ext.Dev35 position						113 008
0: Interm. pos.						
GOOSE: Ext.Dev36 position						113 012
0: Interm. pos.						
GOOSE: Ext.Dev37 position						113 016
0: Interm. pos.						

Parameter						Address
Default	Min	Max	Unit		Logic Diagram	
GOOSE: Ext.Dev38 position						113 020
0: Interm. pos.						
GOOSE: Ext.Dev39 position						113 024
0: Interm. pos.						
GOOSE: Ext.Dev40 position						113 028
0: Interm. pos.						
GOOSE: Ext.Dev41 position						113 032
0: Interm. pos.						
GOOSE: Ext.Dev42 position						113 036
0: Interm. pos.						
GOOSE: Ext.Dev43 position						113 040
0: Interm. pos.						
GOOSE: Ext.Dev44 position						113 044
0: Interm. pos.						
GOOSE: Ext.Dev45 position						113 048
0: Interm. pos.						
GOOSE: Ext.Dev46 position						113 052
0: Interm. pos.						
GOOSE: Ext.Dev47 position						113 056
0: Interm. pos.						
GOOSE: Ext.Dev48 position						113 060
0: Interm. pos.						
GOOSE: Ext.Dev49 position						113 064
0: Interm. pos.						
GOOSE: Ext.Dev50 position						113 068
0: Interm. pos.						
GOOSE: Ext.Dev51 position						113 072
0: Interm. pos.						
GOOSE: Ext.Dev52 position						113 076
0: Interm. pos.						
GOOSE: Ext.Dev53 position						113 080
0: Interm. pos.						
GOOSE: Ext.Dev54 position						113 084
0: Interm. pos.						
GOOSE: Ext.Dev55 position						113 088
0: Interm. pos.						
GOOSE: Ext.Dev56 position						113 092
0: Interm. pos.						

Parameter						Address
Default	Min	Max	Unit			Logic Diagram
GOOSE: Ext.Dev57 position						113 096
0: Interm. pos.						
GOOSE: Ext.Dev58 position						113 100
0: Interm. pos.						
GOOSE: Ext.Dev59 position						113 104
0: Interm. pos.						
GOOSE: Ext.Dev60 position						113 108
0: Interm. pos.						
GOOSE: Ext.Dev61 position						113 112
0: Interm. pos.						
GOOSE: Ext.Dev62 position						113 116
0: Interm. pos.						
GOOSE: Ext.Dev63 position						113 120
0: Interm. pos.						
GOOSE: Ext.Dev64 position						113 124
0: Interm. pos.						
GOOSE: Ext.Dev65 position						113 128
0: Interm. pos.						
GOOSE: Ext.Dev66 position						113 132
0: Interm. pos.						
GOOSE: Ext.Dev67 position						113 136
0: Interm. pos.						
GOOSE: Ext.Dev68 position						113 140
0: Interm. pos.						
GOOSE: Ext.Dev69 position						113 144
0: Interm. pos.						
GOOSE: Ext.Dev70 position						113 148
0: Interm. pos.						
GOOSE: Ext.Dev71 position						113 152
0: Interm. pos.						
GOOSE: Ext.Dev72 position						113 156
0: Interm. pos.						
GOOSE: Ext.Dev73 position						113 160
0: Interm. pos.						
GOOSE: Ext.Dev74 position						113 164
0: Interm. pos.						
GOOSE: Ext.Dev75 position						113 168
0: Interm. pos.						

Parameter						Address
Default	Min	Max	Unit		Logic	Diagram
GOOSE: Ext.Dev76 position						113 172
0: Interm. pos.						
GOOSE: Ext.Dev77 position						113 176
0: Interm. pos.						
GOOSE: Ext.Dev78 position						113 180
0: Interm. pos.						
GOOSE: Ext.Dev79 position						113 184
0: Interm. pos.						
GOOSE: Ext.Dev80 position						113 188
0: Interm. pos.						
GOOSE: Ext.Dev81 position						113 192
0: Interm. pos.						
GOOSE: Ext.Dev82 position						113 196
0: Interm. pos.						
GOOSE: Ext.Dev83 position						113 200
0: Interm. pos.						
GOOSE: Ext.Dev84 position						113 204
0: Interm. pos.						
GOOSE: Ext.Dev85 position						113 208
0: Interm. pos.						
GOOSE: Ext.Dev86 position						113 212
0: Interm. pos.						
GOOSE: Ext.Dev87 position						113 216
0: Interm. pos.						
GOOSE: Ext.Dev88 position						113 220
0: Interm. pos.						
GOOSE: Ext.Dev89 position						113 224
0: Interm. pos.						
GOOSE: Ext.Dev90 position						113 228
0: Interm. pos.						
GOOSE: Ext.Dev91 position						113 232
0: Interm. pos.						
GOOSE: Ext.Dev92 position						113 236
0: Interm. pos.						
GOOSE: Ext.Dev93 position						113 240
0: Interm. pos.						
GOOSE: Ext.Dev94 position						113 244
0: Interm. pos.						

Parameter						Address
Default	Min	Max	Unit			Logic Diagram
GOOSE: Ext.Dev95 position						113 248
0: Interm. pos.						
GOOSE: Ext.Dev96 position						113 252
0: Interm. pos.						
GOOSE: Ext.Dev97 position						114 000
0: Interm. pos.						
GOOSE: Ext.Dev98 position						114 004
0: Interm. pos.						
GOOSE: Ext.Dev99 position						114 008
0: Interm. pos.						
GOOSE: Ext.Dev100 position						114 012
0: Interm. pos.						
GOOSE: Ext.Dev101 position						114 016
0: Interm. pos.						
GOOSE: Ext.Dev102 position						114 020
0: Interm. pos.						
GOOSE: Ext.Dev103 position						114 024
0: Interm. pos.						
GOOSE: Ext.Dev104 position						114 028
0: Interm. pos.						
GOOSE: Ext.Dev105 position						114 032
0: Interm. pos.						
GOOSE: Ext.Dev106 position						114 036
0: Interm. pos.						
GOOSE: Ext.Dev107 position						114 040
0: Interm. pos.						
GOOSE: Ext.Dev108 position						114 044
0: Interm. pos.						
GOOSE: Ext.Dev109 position						114 048
0: Interm. pos.						
GOOSE: Ext.Dev110 position						114 052
0: Interm. pos.						
GOOSE: Ext.Dev111 position						114 056
0: Interm. pos.						
GOOSE: Ext.Dev112 position						114 060
0: Interm. pos.						
GOOSE: Ext.Dev113 position						114 064
0: Interm. pos.						

Parameter						Address
Default	Min	Max	Unit		Logic Diagram	
GOOSE: Ext.Dev114 position						114 068
0: Interm. pos.						
GOOSE: Ext.Dev115 position						114 072
0: Interm. pos.						
GOOSE: Ext.Dev116 position						114 076
0: Interm. pos.						
GOOSE: Ext.Dev117 position						114 080
0: Interm. pos.						
GOOSE: Ext.Dev118 position						114 084
0: Interm. pos.						
GOOSE: Ext.Dev119 position						114 088
0: Interm. pos.						
GOOSE: Ext.Dev120 position						114 092
0: Interm. pos.						
GOOSE: Ext.Dev121 position						114 096
0: Interm. pos.						
GOOSE: Ext.Dev122 position						114 100
0: Interm. pos.						
GOOSE: Ext.Dev123 position						114 104
0: Interm. pos.						
GOOSE: Ext.Dev124 position						114 108
0: Interm. pos.						
GOOSE: Ext.Dev125 position						114 112
0: Interm. pos.						
GOOSE: Ext.Dev126 position						114 116
0: Interm. pos.						
GOOSE: Ext.Dev127 position						114 120
0: Interm. pos.						
GOOSE: Ext.Dev128 position						114 124
0: Interm. pos.						
State of the virtual two-pole GOOSE input, representing the state of an external device.						
GOOSE: Ext.Dev01 open						109 001
0: No						
GOOSE: Ext.Dev02 open						109 006
0: No						
GOOSE: Ext.Dev03 open						109 011
0: No						

Parameter						Address
Default	Min	Max	Unit			Logic Diagram
GOOSE: Ext.Dev04 open						109 016
0: No						
GOOSE: Ext.Dev05 open						109 021
0: No						
GOOSE: Ext.Dev06 open						109 026
0: No						
GOOSE: Ext.Dev07 open						109 031
0: No						
GOOSE: Ext.Dev08 open						109 036
0: No						
GOOSE: Ext.Dev09 open						109 041
0: No						
GOOSE: Ext.Dev10 open						109 046
0: No						
GOOSE: Ext.Dev11 open						109 051
0: No						
GOOSE: Ext.Dev12 open						109 056
0: No						
GOOSE: Ext.Dev13 open						109 061
0: No						
GOOSE: Ext.Dev14 open						109 066
0: No						
GOOSE: Ext.Dev15 open						109 071
0: No						
GOOSE: Ext.Dev16 open						109 076
0: No						
GOOSE: Ext.Dev17 open						109 101
0: No						
GOOSE: Ext.Dev18 open						109 106
0: No						
GOOSE: Ext.Dev19 open						109 111
0: No						
GOOSE: Ext.Dev20 open						109 116
0: No						
GOOSE: Ext.Dev21 open						109 121
0: No						
GOOSE: Ext.Dev22 open						109 126
0: No						

Parameter						Address
Default	Min	Max	Unit		Logic Diagram	
GOOSE: Ext.Dev23 open						109 131
0: No						
GOOSE: Ext.Dev24 open						109 136
0: No						
GOOSE: Ext.Dev25 open						109 141
0: No						
GOOSE: Ext.Dev26 open						109 146
0: No						
GOOSE: Ext.Dev27 open						109 151
0: No						
GOOSE: Ext.Dev28 open						109 156
0: No						
GOOSE: Ext.Dev29 open						109 161
0: No						
GOOSE: Ext.Dev30 open						109 166
0: No						
GOOSE: Ext.Dev31 open						109 171
0: No						
GOOSE: Ext.Dev32 open						109 176
0: No						
GOOSE: Ext.Dev33 open						113 001
0: No						
GOOSE: Ext.Dev34 open						113 005
0: No						
GOOSE: Ext.Dev35 open						113 009
0: No						
GOOSE: Ext.Dev36 open						113 013
0: No						
GOOSE: Ext.Dev37 open						113 017
0: No						
GOOSE: Ext.Dev38 open						113 021
0: No						
GOOSE: Ext.Dev39 open						113 025
0: No						
GOOSE: Ext.Dev40 open						113 029
0: No						
GOOSE: Ext.Dev41 open						113 033
0: No						

Parameter						Address
Default	Min	Max	Unit			Logic Diagram
GOOSE: Ext.Dev42 open						113 037
0: No						
GOOSE: Ext.Dev43 open						113 041
0: No						
GOOSE: Ext.Dev44 open						113 045
0: No						
GOOSE: Ext.Dev45 open						113 049
0: No						
GOOSE: Ext.Dev46 open						113 053
0: No						
GOOSE: Ext.Dev47 open						113 057
0: No						
GOOSE: Ext.Dev48 open						113 061
0: No						
GOOSE: Ext.Dev49 open						113 065
0: No						
GOOSE: Ext.Dev50 open						113 069
0: No						
GOOSE: Ext.Dev51 open						113 073
0: No						
GOOSE: Ext.Dev52 open						113 077
0: No						
GOOSE: Ext.Dev53 open						113 081
0: No						
GOOSE: Ext.Dev54 open						113 085
0: No						
GOOSE: Ext.Dev55 open						113 089
0: No						
GOOSE: Ext.Dev56 open						113 093
0: No						
GOOSE: Ext.Dev57 open						113 097
0: No						
GOOSE: Ext.Dev58 open						113 101
0: No						
GOOSE: Ext.Dev59 open						113 105
0: No						
GOOSE: Ext.Dev60 open						113 109
0: No						

Parameter						Address
Default	Min	Max	Unit		Logic	Diagram
GOOSE: Ext.Dev61 open						113 113
0: No						
GOOSE: Ext.Dev62 open						113 117
0: No						
GOOSE: Ext.Dev63 open						113 121
0: No						
GOOSE: Ext.Dev64 open						113 125
0: No						
GOOSE: Ext.Dev65 open						113 129
0: No						
GOOSE: Ext.Dev66 open						113 133
0: No						
GOOSE: Ext.Dev67 open						113 137
0: No						
GOOSE: Ext.Dev68 open						113 141
0: No						
GOOSE: Ext.Dev69 open						113 145
0: No						
GOOSE: Ext.Dev70 open						113 149
0: No						
GOOSE: Ext.Dev71 open						113 153
0: No						
GOOSE: Ext.Dev72 open						113 157
0: No						
GOOSE: Ext.Dev73 open						113 161
0: No						
GOOSE: Ext.Dev74 open						113 165
0: No						
GOOSE: Ext.Dev75 open						113 169
0: No						
GOOSE: Ext.Dev76 open						113 173
0: No						
GOOSE: Ext.Dev77 open						113 177
0: No						
GOOSE: Ext.Dev78 open						113 181
0: No						
GOOSE: Ext.Dev79 open						113 185
0: No						

Parameter						Address
Default	Min	Max	Unit			Logic Diagram
GOOSE: Ext.Dev80 open						113 189
0: No						
GOOSE: Ext.Dev81 open						113 193
0: No						
GOOSE: Ext.Dev82 open						113 197
0: No						
GOOSE: Ext.Dev83 open						113 201
0: No						
GOOSE: Ext.Dev84 open						113 205
0: No						
GOOSE: Ext.Dev85 open						113 209
0: No						
GOOSE: Ext.Dev86 open						113 213
0: No						
GOOSE: Ext.Dev87 open						113 217
0: No						
GOOSE: Ext.Dev88 open						113 221
0: No						
GOOSE: Ext.Dev89 open						113 225
0: No						
GOOSE: Ext.Dev90 open						113 229
0: No						
GOOSE: Ext.Dev91 open						113 233
0: No						
GOOSE: Ext.Dev92 open						113 237
0: No						
GOOSE: Ext.Dev93 open						113 241
0: No						
GOOSE: Ext.Dev94 open						113 245
0: No						
GOOSE: Ext.Dev95 open						113 249
0: No						
GOOSE: Ext.Dev96 open						113 253
0: No						
GOOSE: Ext.Dev97 open						114 001
0: No						
GOOSE: Ext.Dev98 open						114 005
0: No						

Parameter						Address
Default	Min	Max	Unit		Logic Diagram	
GOOSE: Ext.Dev99 open						114 009
0: No						
GOOSE: Ext.Dev100 open						114 013
0: No						
GOOSE: Ext.Dev101 open						114 017
0: No						
GOOSE: Ext.Dev102 open						114 021
0: No						
GOOSE: Ext.Dev103 open						114 025
0: No						
GOOSE: Ext.Dev104 open						114 029
0: No						
GOOSE: Ext.Dev105 open						114 033
0: No						
GOOSE: Ext.Dev106 open						114 037
0: No						
GOOSE: Ext.Dev107 open						114 041
0: No						
GOOSE: Ext.Dev108 open						114 045
0: No						
GOOSE: Ext.Dev109 open						114 049
0: No						
GOOSE: Ext.Dev110 open						114 053
0: No						
GOOSE: Ext.Dev111 open						114 057
0: No						
GOOSE: Ext.Dev112 open						114 061
0: No						
GOOSE: Ext.Dev113 open						114 065
0: No						
GOOSE: Ext.Dev114 open						114 069
0: No						
GOOSE: Ext.Dev115 open						114 073
0: No						
GOOSE: Ext.Dev116 open						114 077
0: No						
GOOSE: Ext.Dev117 open						114 081
0: No						

Parameter						Address
Default	Min	Max	Unit			Logic Diagram
GOOSE: Ext.Dev118 open						114 085
0: No						
GOOSE: Ext.Dev119 open						114 089
0: No						
GOOSE: Ext.Dev120 open						114 093
0: No						
GOOSE: Ext.Dev121 open						114 097
0: No						
GOOSE: Ext.Dev122 open						114 101
0: No						
GOOSE: Ext.Dev123 open						114 105
0: No						
GOOSE: Ext.Dev124 open						114 109
0: No						
GOOSE: Ext.Dev125 open						114 113
0: No						
GOOSE: Ext.Dev126 open						114 117
0: No						
GOOSE: Ext.Dev127 open						114 121
0: No						
GOOSE: Ext.Dev128 open						114 125
0: No						
Binary open state of the virtual two-pole GOOSE input, representing the state of an external device.						
GOOSE: Ext.Dev01 closed						109 002
0: No						
GOOSE: Ext.Dev02 closed						109 007
0: No						
GOOSE: Ext.Dev03 closed						109 012
0: No						
GOOSE: Ext.Dev04 closed						109 017
0: No						
GOOSE: Ext.Dev05 closed						109 022
0: No						
GOOSE: Ext.Dev06 closed						109 027
0: No						
GOOSE: Ext.Dev07 closed						109 032
0: No						

Parameter						Address
Default	Min	Max	Unit		Logic Diagram	
GOOSE: Ext.Dev08 closed						109 037
0: No						
GOOSE: Ext.Dev09 closed						109 042
0: No						
GOOSE: Ext.Dev10 closed						109 047
0: No						
GOOSE: Ext.Dev11 closed						109 052
0: No						
GOOSE: Ext.Dev12 closed						109 057
0: No						
GOOSE: Ext.Dev13 closed						109 062
0: No						
GOOSE: Ext.Dev14 closed						109 067
0: No						
GOOSE: Ext.Dev15 closed						109 072
0: No						
GOOSE: Ext.Dev16 closed						109 077
0: No						
GOOSE: Ext.Dev17 closed						109 102
0: No						
GOOSE: Ext.Dev18 closed						109 107
0: No						
GOOSE: Ext.Dev19 closed						109 112
0: No						
GOOSE: Ext.Dev20 closed						109 117
0: No						
GOOSE: Ext.Dev21 closed						109 122
0: No						
GOOSE: Ext.Dev22 closed						109 127
0: No						
GOOSE: Ext.Dev23 closed						109 132
0: No						
GOOSE: Ext.Dev24 closed						109 137
0: No						
GOOSE: Ext.Dev25 closed						109 142
0: No						
GOOSE: Ext.Dev26 closed						109 147
0: No						

Parameter						Address
Default	Min	Max	Unit			Logic Diagram
GOOSE: Ext.Dev27 closed						109 152
0: No						
GOOSE: Ext.Dev28 closed						109 157
0: No						
GOOSE: Ext.Dev29 closed						109 162
0: No						
GOOSE: Ext.Dev30 closed						109 167
0: No						
GOOSE: Ext.Dev31 closed						109 172
0: No						
GOOSE: Ext.Dev32 closed						109 177
0: No						
GOOSE: Ext.Dev33 closed						113 002
0: No						
GOOSE: Ext.Dev34 closed						113 006
0: No						
GOOSE: Ext.Dev35 closed						113 010
0: No						
GOOSE: Ext.Dev36 closed						113 014
0: No						
GOOSE: Ext.Dev37 closed						113 018
0: No						
GOOSE: Ext.Dev38 closed						113 022
0: No						
GOOSE: Ext.Dev39 closed						113 026
0: No						
GOOSE: Ext.Dev40 closed						113 030
0: No						
GOOSE: Ext.Dev41 closed						113 034
0: No						
GOOSE: Ext.Dev42 closed						113 038
0: No						
GOOSE: Ext.Dev43 closed						113 042
0: No						
GOOSE: Ext.Dev44 closed						113 046
0: No						
GOOSE: Ext.Dev45 closed						113 050
0: No						

Parameter						Address
Default	Min	Max	Unit		Logic Diagram	
GOOSE: Ext.Dev46 closed						113 054
0: No						
GOOSE: Ext.Dev47 closed						113 058
0: No						
GOOSE: Ext.Dev48 closed						113 062
0: No						
GOOSE: Ext.Dev49 closed						113 066
0: No						
GOOSE: Ext.Dev50 closed						113 070
0: No						
GOOSE: Ext.Dev51 closed						113 074
0: No						
GOOSE: Ext.Dev52 closed						113 078
0: No						
GOOSE: Ext.Dev53 closed						113 082
0: No						
GOOSE: Ext.Dev54 closed						113 086
0: No						
GOOSE: Ext.Dev55 closed						113 090
0: No						
GOOSE: Ext.Dev56 closed						113 094
0: No						
GOOSE: Ext.Dev57 closed						113 098
0: No						
GOOSE: Ext.Dev58 closed						113 102
0: No						
GOOSE: Ext.Dev59 closed						113 106
0: No						
GOOSE: Ext.Dev60 closed						113 110
0: No						
GOOSE: Ext.Dev61 closed						113 114
0: No						
GOOSE: Ext.Dev62 closed						113 118
0: No						
GOOSE: Ext.Dev63 closed						113 122
0: No						
GOOSE: Ext.Dev64 closed						113 126
0: No						

Parameter						Address
Default	Min	Max	Unit			Logic Diagram
GOOSE: Ext.Dev65 closed						113 130
0: No						
GOOSE: Ext.Dev66 closed						113 134
0: No						
GOOSE: Ext.Dev67 closed						113 138
0: No						
GOOSE: Ext.Dev68 closed						113 142
0: No						
GOOSE: Ext.Dev69 closed						113 146
0: No						
GOOSE: Ext.Dev70 closed						113 150
0: No						
GOOSE: Ext.Dev71 closed						113 154
0: No						
GOOSE: Ext.Dev72 closed						113 158
0: No						
GOOSE: Ext.Dev73 closed						113 162
0: No						
GOOSE: Ext.Dev74 closed						113 166
0: No						
GOOSE: Ext.Dev75 closed						113 170
0: No						
GOOSE: Ext.Dev76 closed						113 174
0: No						
GOOSE: Ext.Dev77 closed						113 178
0: No						
GOOSE: Ext.Dev78 closed						113 182
0: No						
GOOSE: Ext.Dev79 closed						113 186
0: No						
GOOSE: Ext.Dev80 closed						113 190
0: No						
GOOSE: Ext.Dev81 closed						113 194
0: No						
GOOSE: Ext.Dev82 closed						113 198
0: No						
GOOSE: Ext.Dev83 closed						113 202
0: No						

Parameter						Address
Default	Min	Max	Unit		Logic Diagram	
GOOSE: Ext.Dev84 closed						113 206
0: No						
GOOSE: Ext.Dev85 closed						113 210
0: No						
GOOSE: Ext.Dev86 closed						113 214
0: No						
GOOSE: Ext.Dev87 closed						113 218
0: No						
GOOSE: Ext.Dev88 closed						113 222
0: No						
GOOSE: Ext.Dev89 closed						113 226
0: No						
GOOSE: Ext.Dev90 closed						113 230
0: No						
GOOSE: Ext.Dev91 closed						113 234
0: No						
GOOSE: Ext.Dev92 closed						113 238
0: No						
GOOSE: Ext.Dev93 closed						113 242
0: No						
GOOSE: Ext.Dev94 closed						113 246
0: No						
GOOSE: Ext.Dev95 closed						113 250
0: No						
GOOSE: Ext.Dev96 closed						113 254
0: No						
GOOSE: Ext.Dev97 closed						114 002
0: No						
GOOSE: Ext.Dev98 closed						114 006
0: No						
GOOSE: Ext.Dev99 closed						114 010
0: No						
GOOSE: Ext.Dev100 closed						114 014
0: No						
GOOSE: Ext.Dev101 closed						114 018
0: No						
GOOSE: Ext.Dev102 closed						114 022
0: No						

Parameter						Address
Default	Min	Max	Unit			Logic Diagram
GOOSE: Ext.Dev103 closed						114 026
0: No						
GOOSE: Ext.Dev104 closed						114 030
0: No						
GOOSE: Ext.Dev105 closed						114 034
0: No						
GOOSE: Ext.Dev106 closed						114 038
0: No						
GOOSE: Ext.Dev107 closed						114 042
0: No						
GOOSE: Ext.Dev108 closed						114 046
0: No						
GOOSE: Ext.Dev109 closed						114 050
0: No						
GOOSE: Ext.Dev110 closed						114 054
0: No						
GOOSE: Ext.Dev111 closed						114 058
0: No						
GOOSE: Ext.Dev112 closed						114 062
0: No						
GOOSE: Ext.Dev113 closed						114 066
0: No						
GOOSE: Ext.Dev114 closed						114 070
0: No						
GOOSE: Ext.Dev115 closed						114 074
0: No						
GOOSE: Ext.Dev116 closed						114 078
0: No						
GOOSE: Ext.Dev117 closed						114 082
0: No						
GOOSE: Ext.Dev118 closed						114 086
0: No						
GOOSE: Ext.Dev119 closed						114 090
0: No						
GOOSE: Ext.Dev120 closed						114 094
0: No						
GOOSE: Ext.Dev121 closed						114 098
0: No						

Parameter						Address
Default	Min	Max	Unit		Logic	Diagram
GOOSE: Ext.Dev122 closed						114 102
0: No						
GOOSE: Ext.Dev123 closed						114 106
0: No						
GOOSE: Ext.Dev124 closed						114 110
0: No						
GOOSE: Ext.Dev125 closed						114 114
0: No						
GOOSE: Ext.Dev126 closed						114 118
0: No						
GOOSE: Ext.Dev127 closed						114 122
0: No						
GOOSE: Ext.Dev128 closed						114 126
0: No						
Binary closed state of the virtual two-pole GOOSE input, representing the state of an external device.						
GOOSE: Ext.Dev01 interm.pos						109 003
0: No						
GOOSE: Ext.Dev02 interm.pos						109 008
0: No						
GOOSE: Ext.Dev03 interm.pos						109 013
0: No						
GOOSE: Ext.Dev04 interm.pos						109 018
0: No						
GOOSE: Ext.Dev05 interm.pos						109 023
0: No						
GOOSE: Ext.Dev06 interm.pos						109 028
0: No						
GOOSE: Ext.Dev07 interm.pos						109 033
0: No						
GOOSE: Ext.Dev08 interm.pos						109 038
0: No						
GOOSE: Ext.Dev09 interm.pos						109 043
0: No						
GOOSE: Ext.Dev10 interm.pos						109 048
0: No						
GOOSE: Ext.Dev11 interm.pos						109 053
0: No						

Parameter						Address
Default	Min	Max	Unit			Logic Diagram
GOOSE: Ext.Dev12 interm.pos						109 058
0: No						
GOOSE: Ext.Dev13 interm.pos						109 063
0: No						
GOOSE: Ext.Dev14 interm.pos						109 068
0: No						
GOOSE: Ext.Dev15 interm.pos						109 073
0: No						
GOOSE: Ext.Dev16 interm.pos						109 078
0: No						
GOOSE: Ext.Dev17 interm.pos						109 103
0: No						
GOOSE: Ext.Dev18 interm.pos						109 108
0: No						
GOOSE: Ext.Dev19 interm.pos						109 113
0: No						
GOOSE: Ext.Dev20 interm.pos						109 118
0: No						
GOOSE: Ext.Dev21 interm.pos						109 123
0: No						
GOOSE: Ext.Dev22 interm.pos						109 128
0: No						
GOOSE: Ext.Dev23 interm.pos						109 133
0: No						
GOOSE: Ext.Dev24 interm.pos						109 138
0: No						
GOOSE: Ext.Dev25 interm.pos						109 143
0: No						
GOOSE: Ext.Dev26 interm.pos						109 148
0: No						
GOOSE: Ext.Dev27 interm.pos						109 153
0: No						
GOOSE: Ext.Dev28 interm.pos						109 158
0: No						
GOOSE: Ext.Dev29 interm.pos						109 163
0: No						
GOOSE: Ext.Dev30 interm.pos						109 168
0: No						

Parameter						Address
Default	Min	Max	Unit		Logic Diagram	
GOOSE: Ext.Dev31 interm.pos						109 173
0: No						
GOOSE: Ext.Dev32 interm.pos						109 178
0: No						
GOOSE: Ext.Dev33 interm.pos						113 003
0: No						
GOOSE: Ext.Dev34 interm.pos						113 007
0: No						
GOOSE: Ext.Dev35 interm.pos						113 011
0: No						
GOOSE: Ext.Dev36 interm.pos						113 015
0: No						
GOOSE: Ext.Dev37 interm.pos						113 019
0: No						
GOOSE: Ext.Dev38 interm.pos						113 023
0: No						
GOOSE: Ext.Dev39 interm.pos						113 027
0: No						
GOOSE: Ext.Dev40 interm.pos						113 031
0: No						
GOOSE: Ext.Dev41 interm.pos						113 035
0: No						
GOOSE: Ext.Dev42 interm.pos						113 039
0: No						
GOOSE: Ext.Dev43 interm.pos						113 043
0: No						
GOOSE: Ext.Dev44 interm.pos						113 047
0: No						
GOOSE: Ext.Dev45 interm.pos						113 051
0: No						
GOOSE: Ext.Dev46 interm.pos						113 055
0: No						
GOOSE: Ext.Dev47 interm.pos						113 059
0: No						
GOOSE: Ext.Dev48 interm.pos						113 063
0: No						
GOOSE: Ext.Dev49 interm.pos						113 067
0: No						

Parameter						Address
Default	Min	Max	Unit			Logic Diagram
GOOSE: Ext.Dev50 interm.pos						113 071
0: No						
GOOSE: Ext.Dev51 interm.pos						113 075
0: No						
GOOSE: Ext.Dev52 interm.pos						113 079
0: No						
GOOSE: Ext.Dev53 interm.pos						113 083
0: No						
GOOSE: Ext.Dev54 interm.pos						113 087
0: No						
GOOSE: Ext.Dev55 interm.pos						113 091
0: No						
GOOSE: Ext.Dev56 interm.pos						113 095
0: No						
GOOSE: Ext.Dev57 interm.pos						113 099
0: No						
GOOSE: Ext.Dev58 interm.pos						113 103
0: No						
GOOSE: Ext.Dev59 interm.pos						113 107
0: No						
GOOSE: Ext.Dev60 interm.pos						113 111
0: No						
GOOSE: Ext.Dev61 interm.pos						113 115
0: No						
GOOSE: Ext.Dev62 interm.pos						113 119
0: No						
GOOSE: Ext.Dev63 interm.pos						113 123
0: No						
GOOSE: Ext.Dev64 interm.pos						113 127
0: No						
GOOSE: Ext.Dev65 interm.pos						113 131
0: No						
GOOSE: Ext.Dev66 interm.pos						113 135
0: No						
GOOSE: Ext.Dev67 interm.pos						113 139
0: No						
GOOSE: Ext.Dev68 interm.pos						113 143
0: No						

Parameter						Address
Default	Min	Max	Unit		Logic Diagram	
GOOSE: Ext.Dev69 interm.pos						113 147
0: No						
GOOSE: Ext.Dev70 interm.pos						113 151
0: No						
GOOSE: Ext.Dev71 interm.pos						113 155
0: No						
GOOSE: Ext.Dev72 interm.pos						113 159
0: No						
GOOSE: Ext.Dev73 interm.pos						113 163
0: No						
GOOSE: Ext.Dev74 interm.pos						113 167
0: No						
GOOSE: Ext.Dev75 interm.pos						113 171
0: No						
GOOSE: Ext.Dev76 interm.pos						113 175
0: No						
GOOSE: Ext.Dev77 interm.pos						113 179
0: No						
GOOSE: Ext.Dev78 interm.pos						113 183
0: No						
GOOSE: Ext.Dev79 interm.pos						113 187
0: No						
GOOSE: Ext.Dev80 interm.pos						113 191
0: No						
GOOSE: Ext.Dev81 interm.pos						113 195
0: No						
GOOSE: Ext.Dev82 interm.pos						113 199
0: No						
GOOSE: Ext.Dev83 interm.pos						113 203
0: No						
GOOSE: Ext.Dev84 interm.pos						113 207
0: No						
GOOSE: Ext.Dev85 interm.pos						113 211
0: No						
GOOSE: Ext.Dev86 interm.pos						113 215
0: No						
GOOSE: Ext.Dev87 interm.pos						113 219
0: No						

Parameter					Address
Default	Min	Max	Unit		Logic Diagram
GOOSE: Ext.Dev88 interm.pos					113 223
0: No					
GOOSE: Ext.Dev89 interm.pos					113 227
0: No					
GOOSE: Ext.Dev90 interm.pos					113 231
0: No					
GOOSE: Ext.Dev91 interm.pos					113 235
0: No					
GOOSE: Ext.Dev92 interm.pos					113 239
0: No					
GOOSE: Ext.Dev93 interm.pos					113 243
0: No					
GOOSE: Ext.Dev94 interm.pos					113 247
0: No					
GOOSE: Ext.Dev95 interm.pos					113 251
0: No					
GOOSE: Ext.Dev96 interm.pos					113 255
0: No					
GOOSE: Ext.Dev97 interm.pos					114 003
0: No					
GOOSE: Ext.Dev98 interm.pos					114 007
0: No					
GOOSE: Ext.Dev99 interm.pos					114 011
0: No					
GOOSE: Ext.Dev100 interm.po					114 015
0: No					
GOOSE: Ext.Dev101 interm.po					114 019
0: No					
GOOSE: Ext.Dev102 interm.po					114 023
0: No					
GOOSE: Ext.Dev103 interm.po					114 027
0: No					
GOOSE: Ext.Dev104 interm.po					114 031
0: No					
GOOSE: Ext.Dev105 interm.po					114 035
0: No					
GOOSE: Ext.Dev106 interm.po					114 039
0: No					

Parameter						Address
Default	Min	Max	Unit		Logic Diagram	
GOOSE: Ext.Dev107 interm.po						114 043
0: No						
GOOSE: Ext.Dev108 interm.po						114 047
0: No						
GOOSE: Ext.Dev109 interm.po						114 051
0: No						
GOOSE: Ext.Dev110 interm.po						114 055
0: No						
GOOSE: Ext.Dev111 interm.po						114 059
0: No						
GOOSE: Ext.Dev112 interm.po						114 063
0: No						
GOOSE: Ext.Dev113 interm.po						114 067
0: No						
GOOSE: Ext.Dev114 interm.po						114 071
0: No						
GOOSE: Ext.Dev115 interm.po						114 075
0: No						
GOOSE: Ext.Dev116 interm.po						114 079
0: No						
GOOSE: Ext.Dev117 interm.po						114 083
0: No						
GOOSE: Ext.Dev118 interm.po						114 087
0: No						
GOOSE: Ext.Dev119 interm.po						114 091
0: No						
GOOSE: Ext.Dev120 interm.po						114 095
0: No						
GOOSE: Ext.Dev121 interm.po						114 099
0: No						
GOOSE: Ext.Dev122 interm.po						114 103
0: No						
GOOSE: Ext.Dev123 interm.po						114 107
0: No						
GOOSE: Ext.Dev124 interm.po						114 111
0: No						
GOOSE: Ext.Dev125 interm.po						114 115
0: No						

Parameter					Address
Default	Min	Max	Unit		Logic Diagram
GOOSE: Ext.Dev126 interm.po					114 119
0: No					
GOOSE: Ext.Dev127 interm.po					114 123
0: No					
GOOSE: Ext.Dev128 interm.po					114 127
0: No					
Binary intermediate position state of the virtual two-pole GOOSE input, representing the state of an external device.					
GOOSE: IED01 link faulty					107 180
0: No					
GOOSE: IED02 link faulty					107 181
0: No					
GOOSE: IED03 link faulty					107 182
0: No					
GOOSE: IED04 link faulty					107 183
0: No					
GOOSE: IED05 link faulty					107 184
0: No					
GOOSE: IED06 link faulty					107 185
0: No					
GOOSE: IED07 link faulty					107 186
0: No					
GOOSE: IED08 link faulty					107 187
0: No					
GOOSE: IED09 link faulty					107 188
0: No					
GOOSE: IED10 link faulty					107 189
0: No					
GOOSE: IED11 link faulty					107 190
0: No					
GOOSE: IED12 link faulty					107 191
0: No					
GOOSE: IED13 link faulty					107 192
0: No					
GOOSE: IED14 link faulty					107 193
0: No					
GOOSE: IED15 link faulty					107 194
0: No					

Parameter						Address
Default	Min	Max	Unit		Logic Diagram	
GOOSE: IED16 link faulty						107 195
0: No						
GOOSE: IED17 link faulty						107 200
0: No						
GOOSE: IED18 link faulty						107 201
0: No						
GOOSE: IED19 link faulty						107 202
0: No						
GOOSE: IED20 link faulty						107 203
0: No						
GOOSE: IED21 link faulty						107 204
0: No						
GOOSE: IED22 link faulty						107 205
0: No						
GOOSE: IED23 link faulty						107 206
0: No						
GOOSE: IED24 link faulty						107 207
0: No						
GOOSE: IED25 link faulty						107 208
0: No						
GOOSE: IED26 link faulty						107 209
0: No						
GOOSE: IED27 link faulty						107 210
0: No						
GOOSE: IED28 link faulty						107 211
0: No						
GOOSE: IED29 link faulty						107 212
0: No						
GOOSE: IED30 link faulty						107 213
0: No						
GOOSE: IED31 link faulty						107 214
0: No						
GOOSE: IED32 link faulty						107 215
0: No						

Display whether GOOSE receipt of the configured signal is faulty or not available. To each GOOSE the GOOSE sending device will attach a validity stamp, up to which a repetition of GOOSE will be carried out independent of a change of state. Thus the protection and control unit monitors the time period at which the next state signal must be received.

Parameter						Address
Default	Min	Max	Unit			Logic Diagram
GOOSE: ExtDev01 link faulty						107 216
0: No						
GOOSE: ExtDev02 link faulty						107 217
0: No						
GOOSE: ExtDev03 link faulty						107 218
0: No						
GOOSE: ExtDev04 link faulty						107 219
0: No						
GOOSE: ExtDev05 link faulty						107 220
0: No						
GOOSE: ExtDev06 link faulty						107 221
0: No						
GOOSE: ExtDev07 link faulty						107 222
0: No						
GOOSE: ExtDev08 link faulty						107 223
0: No						
GOOSE: ExtDev09 link faulty						107 224
0: No						
GOOSE: ExtDev10 link faulty						107 225
0: No						
GOOSE: ExtDev11 link faulty						107 226
0: No						
GOOSE: ExtDev12 link faulty						107 227
0: No						
GOOSE: ExtDev13 link faulty						107 228
0: No						
GOOSE: ExtDev14 link faulty						107 229
0: No						
GOOSE: ExtDev15 link faulty						107 230
0: No						
GOOSE: ExtDev16 link faulty						107 231
0: No						
GOOSE: ExtDev17 link faulty						107 232
0: No						
GOOSE: ExtDev18 link faulty						107 233
0: No						
GOOSE: ExtDev19 link faulty						107 234
0: No						

Parameter						Address
Default	Min	Max	Unit		Logic Diagram	
GOOSE: ExtDev20 link faulty						107 235
0: No						
GOOSE: ExtDev21 link faulty						107 236
0: No						
GOOSE: ExtDev22 link faulty						107 237
0: No						
GOOSE: ExtDev23 link faulty						107 238
0: No						
GOOSE: ExtDev24 link faulty						107 239
0: No						
GOOSE: ExtDev25 link faulty						107 240
0: No						
GOOSE: ExtDev26 link faulty						107 241
0: No						
GOOSE: ExtDev27 link faulty						107 242
0: No						
GOOSE: ExtDev28 link faulty						107 243
0: No						
GOOSE: ExtDev29 link faulty						107 244
0: No						
GOOSE: ExtDev30 link faulty						107 245
0: No						
GOOSE: ExtDev31 link faulty						107 246
0: No						
GOOSE: ExtDev32 link faulty						107 247
0: No						
Display when GOOSE receipt of the configured external device is faulty or not available. To each GOOSE the GOOSE sending device will attach a validity stamp, up to which a repetition of GOOSE will be carried out independent of a change of state. Thus the unit monitors the time period at which the next state signal must be received.						
GOOSE: IED link faulty						107 250
0: No						
Display which appears as soon as receipt of at least one of the configured GOOSEs is faulty or not available. To each GOOSE the GOOSE sending device will attach a validity stamp, up to which a repetition of GOOSE will be carried out independent of a change of state. Thus the unit monitors the time period at which the next state signal must be received.						

Parameter						Address
Default	Min	Max	Unit			Logic Diagram
GOOSE: IED01-16 linked						107 251
2:						
GOOSE: IED17-32 linked						107 252
2:						
GOOSE: Input 01 faulty						111 100
0: No						
GOOSE: Input 02 faulty						111 101
0: No						
GOOSE: Input 03 faulty						111 102
0: No						
GOOSE: Input 04 faulty						111 103
0: No						
GOOSE: Input 05 faulty						111 104
0: No						
GOOSE: Input 06 faulty						111 105
0: No						
GOOSE: Input 07 faulty						111 106
0: No						
GOOSE: Input 08 faulty						111 107
0: No						
GOOSE: Input 09 faulty						111 108
0: No						
GOOSE: Input 10 faulty						111 109
0: No						
GOOSE: Input 11 faulty						111 110
0: No						
GOOSE: Input 12 faulty						111 111
0: No						
GOOSE: Input 13 faulty						111 112
0: No						
GOOSE: Input 14 faulty						111 113
0: No						
GOOSE: Input 15 faulty						111 114
0: No						
GOOSE: Input 16 faulty						111 115
0: No						
GOOSE: Input 17 faulty						111 116
0: No						

Parameter						Address
Default	Min	Max	Unit		Logic Diagram	
GOOSE: Input 18 faulty						111 117
0: No						
GOOSE: Input 19 faulty						111 118
0: No						
GOOSE: Input 20 faulty						111 119
0: No						
GOOSE: Input 21 faulty						111 120
0: No						
GOOSE: Input 22 faulty						111 121
0: No						
GOOSE: Input 23 faulty						111 122
0: No						
GOOSE: Input 24 faulty						111 123
0: No						
GOOSE: Input 25 faulty						111 124
0: No						
GOOSE: Input 26 faulty						111 125
0: No						
GOOSE: Input 27 faulty						111 126
0: No						
GOOSE: Input 28 faulty						111 127
0: No						
GOOSE: Input 29 faulty						111 128
0: No						
GOOSE: Input 30 faulty						111 129
0: No						
GOOSE: Input 31 faulty						111 130
0: No						
GOOSE: Input 32 faulty						111 131
0: No						
GOOSE: Input 33 faulty						111 132
0: No						
GOOSE: Input 34 faulty						111 133
0: No						
GOOSE: Input 35 faulty						111 134
0: No						
GOOSE: Input 36 faulty						111 135
0: No						

Parameter						Address
Default	Min	Max	Unit			Logic Diagram
GOOSE: Input 37 faulty						111 136
0: No						
GOOSE: Input 38 faulty						111 137
0: No						
GOOSE: Input 39 faulty						111 138
0: No						
GOOSE: Input 40 faulty						111 139
0: No						
GOOSE: Input 41 faulty						111 140
0: No						
GOOSE: Input 42 faulty						111 141
0: No						
GOOSE: Input 43 faulty						111 142
0: No						
GOOSE: Input 44 faulty						111 143
0: No						
GOOSE: Input 45 faulty						111 144
0: No						
GOOSE: Input 46 faulty						111 145
0: No						
GOOSE: Input 47 faulty						111 146
0: No						
GOOSE: Input 48 faulty						111 147
0: No						
GOOSE: Input 49 faulty						111 148
0: No						
GOOSE: Input 50 faulty						111 149
0: No						
GOOSE: Input 51 faulty						111 150
0: No						
GOOSE: Input 52 faulty						111 151
0: No						
GOOSE: Input 53 faulty						111 152
0: No						
GOOSE: Input 54 faulty						111 153
0: No						
GOOSE: Input 55 faulty						111 154
0: No						

Parameter						Address
Default	Min	Max	Unit		Logic Diagram	
GOOSE: Input 56 faulty						111 155
0: No						
GOOSE: Input 57 faulty						111 156
0: No						
GOOSE: Input 58 faulty						111 157
0: No						
GOOSE: Input 59 faulty						111 158
0: No						
GOOSE: Input 60 faulty						111 159
0: No						
GOOSE: Input 61 faulty						111 160
0: No						
GOOSE: Input 62 faulty						111 161
0: No						
GOOSE: Input 63 faulty						111 162
0: No						
GOOSE: Input 64 faulty						111 163
0: No						
GOOSE: Input 65 faulty						111 164
0: No						
GOOSE: Input 66 faulty						111 165
0: No						
GOOSE: Input 67 faulty						111 166
0: No						
GOOSE: Input 68 faulty						111 167
0: No						
GOOSE: Input 69 faulty						111 168
0: No						
GOOSE: Input 70 faulty						111 169
0: No						
GOOSE: Input 71 faulty						111 170
0: No						
GOOSE: Input 72 faulty						111 171
0: No						
GOOSE: Input 73 faulty						111 172
0: No						
GOOSE: Input 74 faulty						111 173
0: No						

Parameter						Address
Default	Min	Max	Unit			Logic Diagram
GOOSE: Input 75 faulty						111 174
0: No						
GOOSE: Input 76 faulty						111 175
0: No						
GOOSE: Input 77 faulty						111 176
0: No						
GOOSE: Input 78 faulty						111 177
0: No						
GOOSE: Input 79 faulty						111 178
0: No						
GOOSE: Input 80 faulty						111 179
0: No						
GOOSE: Input 81 faulty						111 180
0: No						
GOOSE: Input 82 faulty						111 181
0: No						
GOOSE: Input 83 faulty						111 182
0: No						
GOOSE: Input 84 faulty						111 183
0: No						
GOOSE: Input 85 faulty						111 184
0: No						
GOOSE: Input 86 faulty						111 185
0: No						
GOOSE: Input 87 faulty						111 186
0: No						
GOOSE: Input 88 faulty						111 187
0: No						
GOOSE: Input 89 faulty						111 188
0: No						
GOOSE: Input 90 faulty						111 189
0: No						
GOOSE: Input 91 faulty						111 190
0: No						
GOOSE: Input 92 faulty						111 191
0: No						
GOOSE: Input 93 faulty						111 192
0: No						

Parameter						Address
Default	Min	Max	Unit		Logic	Diagram
GOOSE: Input 94 faulty						111 193
0: No						
GOOSE: Input 95 faulty						111 194
0: No						
GOOSE: Input 96 faulty						111 195
0: No						
GOOSE: Input 97 faulty						111 196
0: No						
GOOSE: Input 98 faulty						111 197
0: No						
GOOSE: Input 99 faulty						111 198
0: No						
GOOSE: Input 100 faulty						111 199
0: No						
GOOSE: Input 101 faulty						111 200
0: No						
GOOSE: Input 102 faulty						111 201
0: No						
GOOSE: Input 103 faulty						111 202
0: No						
GOOSE: Input 104 faulty						111 203
0: No						
GOOSE: Input 105 faulty						111 204
0: No						
GOOSE: Input 106 faulty						111 205
0: No						
GOOSE: Input 107 faulty						111 206
0: No						
GOOSE: Input 108 faulty						111 207
0: No						
GOOSE: Input 109 faulty						111 208
0: No						
GOOSE: Input 110 faulty						111 209
0: No						
GOOSE: Input 111 faulty						111 210
0: No						
GOOSE: Input 112 faulty						111 211
0: No						

Parameter						Address
Default	Min	Max	Unit			Logic Diagram
GOOSE: Input 113 faulty						111 212
0: No						
GOOSE: Input 114 faulty						111 213
0: No						
GOOSE: Input 115 faulty						111 214
0: No						
GOOSE: Input 116 faulty						111 215
0: No						
GOOSE: Input 117 faulty						111 216
0: No						
GOOSE: Input 118 faulty						111 217
0: No						
GOOSE: Input 119 faulty						111 218
0: No						
GOOSE: Input 120 faulty						111 219
0: No						
GOOSE: Input 121 faulty						111 220
0: No						
GOOSE: Input 122 faulty						111 221
0: No						
GOOSE: Input 123 faulty						111 222
0: No						
GOOSE: Input 124 faulty						111 223
0: No						
GOOSE: Input 125 faulty						111 224
0: No						
GOOSE: Input 126 faulty						111 225
0: No						
GOOSE: Input 127 faulty						111 226
0: No						
GOOSE: Input 128 faulty						111 227
0: No						
GOOSE: IED33-48 linked						112 200
2:						
GOOSE: IED49-64 linked						112 201
2:						
GOOSE: IED65-80 linked						112 202
2:						

Parameter							Address
Default	Min	Max	Unit			Logic Diagram	
GOOSE: IED81-96 linked							112 203
2:							
GOOSE: IED97-112 linked							112 204
2:							
GOOSE: IED113-128 linked							112 205
2:							
GOOSE: OrdRun01-16 linked							107 248
2:							
GOOSE: OrdRun17-32 linked							107 249
2:							
GOOSE: Uniqueness 1-16							007 217
Not measured	0	65535					
GOOSE: Uniqueness 17-32							007 218
Not measured	0	65535					

Virtual Inputs

Parameter						Address
Default	Min	Max	Unit			Logic Diagram
VINP: Input 8 faulty						115 087
0: No						
VINP: Input 9 faulty						115 088
0: No						
VINP: Input 10 faulty						115 089
0: No						
VINP: Input 11 faulty						115 090
0: No						
VINP: Input 12 faulty						115 091
0: No						
VINP: Input 13 faulty						115 092
0: No						
VINP: Input 14 faulty						115 093
0: No						
VINP: Input 15 faulty						115 094
0: No						
VINP: Input 16 faulty						115 095
0: No						
VINP: Input 17 faulty						115 096
0: No						
VINP: Input 18 faulty						115 097
0: No						
VINP: Input 19 faulty						115 098
0: No						
VINP: Input 20 faulty						115 099
0: No						
VINP: Input 21 faulty						115 100
0: No						
VINP: Input 22 faulty						115 101
0: No						
VINP: Input 23 faulty						115 102
0: No						
VINP: Input 24 faulty						115 103
0: No						
VINP: Input 25 faulty						115 104
0: No						
VINP: Input 26 faulty						115 105
0: No						

Parameter						Address
Default	Min	Max	Unit		Logic Diagram	
VINP: Input 27 faulty						115 106
0: No						
VINP: Input 28 faulty						115 107
0: No						
VINP: Input 29 faulty						115 108
0: No						
VINP: Input 30 faulty						115 109
0: No						
VINP: Input 31 faulty						115 110
0: No						
VINP: Input 32 faulty						115 111
0: No						
VINP: Input 33 faulty						115 112
0: No						
VINP: Input 34 faulty						115 113
0: No						
VINP: Input 35 faulty						115 114
0: No						
VINP: Input 36 faulty						115 115
0: No						
VINP: Input 37 faulty						115 116
0: No						
VINP: Input 38 faulty						115 117
0: No						
VINP: Input 39 faulty						115 118
0: No						
VINP: Input 40 faulty						115 119
0: No						
VINP: Input 41 faulty						115 120
0: No						
VINP: Input 42 faulty						115 121
0: No						
VINP: Input 43 faulty						115 122
0: No						
VINP: Input 44 faulty						115 123
0: No						
VINP: Input 45 faulty						115 124
0: No						

Parameter						Address
Default	Min	Max	Unit			Logic Diagram
VINP: Input 46 faulty						115 125
0: No						
VINP: Input 47 faulty						115 126
0: No						
VINP: Input 48 faulty						115 127
0: No						
VINP: Input 49 faulty						115 128
0: No						
VINP: Input 50 faulty						115 129
0: No						
VINP: Input 51 faulty						115 130
0: No						
VINP: Input 52 faulty						115 131
0: No						
VINP: Input 53 faulty						115 132
0: No						
VINP: Input 54 faulty						115 133
0: No						
VINP: Input 55 faulty						115 134
0: No						
VINP: Input 56 faulty						115 135
0: No						
VINP: Input 57 faulty						115 136
0: No						
VINP: Input 58 faulty						115 137
0: No						
VINP: Input 59 faulty						115 138
0: No						
VINP: Input 60 faulty						115 139
0: No						
VINP: Input 61 faulty						115 140
0: No						
VINP: Input 62 faulty						115 141
0: No						
VINP: Input 63 faulty						115 142
0: No						
VINP: Input 64 faulty						115 143
0: No						

Parameter						Address
Default	Min	Max	Unit		Logic Diagram	
VINP: Input 1 faulty						115 080
0: No						
VINP: Input 2 faulty						115 081
0: No						
VINP: Input 3 faulty						115 082
0: No						
VINP: Input 4 faulty						115 083
0: No						
VINP: Input 5 faulty						115 084
0: No						
VINP: Input 6 faulty						115 085
0: No						
VINP: Input 7 faulty						115 086
0: No						

IRIG-B interface

Parameter						Address
Default	Min	Max	Unit		Logic Diagram	
IRIGB: Enabled						023 201
0: No				Fig. 3-29, (p. 3-51)		
IRIGB: Synchron. ready						023 202
0: No				Fig. 3-29, (p. 3-51)		
IRIGB: EBR Synchron. ready						023 203
0: No				Fig. 3-29, (p. 3-51)		

Measured data input

Parameter						Address
Default	Min	Max	Unit		Logic Diagram	
MEASI: Reset Tmax EXT						006 076
0: No						
MEASI: Enabled						035 008
0: No				Fig. 3-32, (p. 3-56) Fig. 3-40, (p. 3-65)		
MEASI: PT100 faulty						040 190
0: No				Fig. 3-37, (p. 3-61)		
MEASI: Overload 20mA input						040 191
0: No				Fig. 3-35, (p. 3-59)		
MEASI: Open circ. 20mA inp.						040 192
0: No				Fig. 3-35, (p. 3-59)		

Binary and analog output

Parameter						Address
Default	Min	Max	Unit			Logic Diagram
OUTP: Block outp.rel. EXT						040 014
0: No						
OUTP: Reset latch. EXT						040 015
0: No						
OUTP: Outp. relays blocked						021 015
1: Yes				Fig. 3-38, (p. 3-63)		
OUTP: Latching reset						040 088
0: No				Fig. 3-38, (p. 3-63)		

Measured data output

Parameter						Address
Default	Min	Max	Unit			Logic Diagram
MEASO: Enabled						037 102
0: No						
MEASO: Outp. enabled EXT						036 085
1: Yes						
MEASO: Reset output EXT						036 087
0: No						
MEASO: Output reset						037 117
0: No				Fig. 3-42, (p. 3-66)		
MEASO: Valid BCD value						037 050
0: No				Fig. 3-43, (p. 3-69)		
MEASO: 1-digit bit 0 (BCD)						037 051
0: No				Fig. 3-43, (p. 3-69)		
MEASO: 1-digit bit 1 (BCD)						037 052
0: No				Fig. 3-43, (p. 3-69)		
MEASO: 1-digit bit 2 (BCD)						037 053
0: No				Fig. 3-43, (p. 3-69)		
MEASO: 1-digit bit 3 (BCD)						037 054
0: No				Fig. 3-43, (p. 3-69)		
MEASO: 10-digit bit 0 (BCD)						037 055
0: No				Fig. 3-43, (p. 3-69)		
MEASO: 10-digit bit 1 (BCD)						037 056
0: No				Fig. 3-43, (p. 3-69)		
MEASO: 10-digit bit 2 (BCD)						037 057
0: No				Fig. 3-43, (p. 3-69)		
MEASO: 10-digit bit 3 (BCD)						037 058
0: No				Fig. 3-43, (p. 3-69)		
MEASO: 100-dig. bit 0 (BCD)						037 059
0: No				Fig. 3-43, (p. 3-69)		
MEASO: 100-dig. bit 1 (BCD)						037 060
0: No				Fig. 3-43, (p. 3-69)		
MEASO: Value A-1 valid						069 014
0: No				Fig. 3-45, (p. 3-75)		
MEASO: Value A-1 output						037 118
0: No				Fig. 3-45, (p. 3-75)		
MEASO: Value A-2 valid						069 015
0: No						

Parameter					Address
Default	Min	Max	Unit		Logic Diagram
MEASO: Value A-2 output					037 119
0: No					

Main function

Parameter						Address
Default	Min	Max	Unit		Logic Diagram	
MAIN: Enable protect. EXT						003 027
2: Not configured						
MAIN: Disable protect. EXT						003 026
2: Not configured						
MAIN: General reset EXT						005 255
0: No						
MAIN: Reset indicat. EXT						065 001
0: No						
MAIN: Group reset 1 EXT						005 209
0: No						
MAIN: Group reset 2 EXT						005 252
0: No						
MAIN: Reset latch.trip EXT						040 138
0: No						
MAIN: Reset c. cl/tr.c EXT						005 210
0: No						
MAIN: Reset IP,max,st. EXT						005 211
0: No						
MAIN: CB1 open 3p EXT						031 028
0: No					Fig. 3-69, (p. 3-106)	
MAIN: CB2 open 3p EXT						031 046
0: No						
MAIN: CB3 open 3p EXT						031 047
0: No						
MAIN: CB1 closed 3p EXT						036 051
0: No					Fig. 3-68, (p. 3-106)	
MAIN: CB2 closed 3p EXT						036 230
0: No						
MAIN: CB3 closed 3p EXT						036 231
0: No						
MAIN: CB1 faulty EXT						221 086
0: No						
MAIN: Blocking 1 EXT						040 060
0: No						
MAIN: Blocking 2 EXT						040 061
0: No						
MAIN: Blocking 3 EXT						040 116
0: No						

Parameter						Address
Default	Min	Max	Unit			Logic Diagram
MAIN: Blocking 4 EXT						040 117
0: No						
MAIN: M.c.b. trip V EXT						004 061
0: No						
MAIN: Trip cmd. block. EXT						036 045
0: No						
MAIN: Man. trip cmd. EXT						037 018
0: No						
MAIN: Switch dyn.param.EXT						036 033
0: No						
MAIN: Test mode EXT						037 070
0: No						
MAIN: Time switching EXT						003 096
0: Standard time						
MAIN: Min-pulse clock EXT						060 060
0: No						
MAIN: Healthy						060 001
1: Yes						
Signal that the protection unit is operational. By default this signal is linked to **LED: Fct.assig. H 1 green**.						
MAIN: Time synchronized						009 109
0: No						
MAIN: Blocked/faulty						004 065
1: Yes				Fig. 3-67, (p. 3-105)		
MAIN: Protect. not ready						004 060
1: Yes				Fig. 3-67, (p. 3-105)		
MAIN: Test mode						037 071
0: No				Fig. 3-81, (p. 3-116)		
MAIN: Prot. ext. enabled						003 028
0: No				Fig. 3-63, (p. 3-101)		
MAIN: Prot. ext. disabled						038 046
1: Yes				Fig. 3-63, (p. 3-101)		
MAIN: Dynam. param. active						040 090
0: No				Fig. 3-64, (p. 3-102)		
MAIN: CB1 open 3p						031 040
0: No						
MAIN: CB2 open 3p						031 086
0: No						

Parameter						Address
Default	Min	Max	Unit		Logic Diagram	
MAIN: CB3 open 3p						031 087
0: No						
MAIN: CB1 closed 3p						031 042
0: No						
MAIN: CB2 closed 3p						031 089
0: No						
MAIN: CB3 closed 3p						031 090
0: No						
MAIN: CB1 pos.sig. implaus						031 041
0: No						
MAIN: CB2 pos.sig. implaus						031 049
0: No						
MAIN: CB3 pos.sig. implaus						031 051
0: No						
MAIN: Trip cmd. blocked						021 013
1: Yes					Fig. 3-74, (p. 3-110)	
MAIN: Latch. trip c. reset						040 139
0: No					Fig. 3-74, (p. 3-110)	
MAIN: Gen. trip command 1						036 071
0: No					Fig. 3-74, (p. 3-110) Fig. 3-144, (p. 3-195)	
MAIN: Gen. trip command 2						036 022
0: No						
MAIN: Gen. trip command 3						036 113
0: No						
MAIN: Gen. trip command 4						036 114
0: No						
MAIN: Gen. trip signal						036 251
0: No					Fig. 3-74, (p. 3-110)	
MAIN: Gen. trip signal 1						036 005
0: No					Fig. 3-74, (p. 3-110)	
MAIN: Gen. trip signal 2						036 023
0: No						
MAIN: Gen. trip signal 3						036 108
0: No						
MAIN: Gen. trip signal 4						036 109
0: No						

Parameter					Address
Default	Min	Max	Unit		Logic Diagram
MAIN: Manual trip signal					034 017
0: No				Fig. 3-74, (p. 3-110)	
MAIN: Disconnect End a EXT					041 019
0: No					
MAIN: Disconnect End b EXT					041 107
0: No					
MAIN: Disconnect End c EXT					041 128
0: No					
MAIN: En. disc. end x EXT					041 148
0: No					
MAIN: Meas. circ.l faulty					036 155
0: No				Fig. 3-71, (p. 3-108) Fig. 3-170, (p. 3-218)	
MAIN: General starting					036 000
0: No				Fig. 3-72, (p. 3-108)	
MAIN: Trip sig.REF1 & REF2					036 174
0: No					
MAIN: Trip sig.REF2 & REF3					036 175
0: No					
MAIN: Trip sig.REF1 & REF3					036 176
0: No					
MAIN: REFn trip signal					019 200
0: No					
MAIN: Phase reversal activ					036 220
0: No				Fig. 3-50, (p. 3-84)	
MAIN: CB failure					036 017
0: No				Fig. 3-176, (p. 3-225)	
MAIN: End a disconnected					041 149
0: No					
MAIN: End b disconnected					041 158
0: No					
MAIN: End c disconnected					041 159
0: No					
MAIN: Enable control					221 058
1: Yes				Fig. 3-196, (p. 3-244)	
MAIN: Bay interlock. act.					221 001
0: No				Fig. 3-196, (p. 3-244)	

Parameter						Address
Default	Min	Max	Unit		Logic Diagram	
MAIN: Subst. interl. act.						221 000
0: No				Fig. 3-196, (p. 3-244)		
MAIN: Fct. block. 1 active						221 015
0: No				Fig. 3-65, (p. 3-103)		
MAIN: Fct. block. 2 active						221 023
0: No				Fig. 3-65, (p. 3-103)		
MAIN: Mon. mot. drives tr.						221 056
0: No						
MAIN: Interlock equ. viol.						221 018
0: No				Fig. 3-197, (p. 3-245)		
MAIN: CB trip internal						221 006
0: No						
MAIN: CB tripped						221 016
0: No						
MAIN: DEV op.time exceeded						221 110
0: No						
In the case of direct motor control by motor relay K200 this fault signal is issued (as a group signal) when no positive position signal (status signal) has been received from the external device after it has been issued a close command and the set running time-delay has elapsed.						
MAIN: Chatt.suppr. started						221 121
0: No						
Signal that the chatter suppression has started.						
MAIN: K200 fail. cmd. end						221 108
0: No						
In the case of direct motor control by motor relay K200 this signal is issued if the K200 contacts have not reopened after the set monitoring time-delay has elapsed.						
MAIN: K200 fail. cmd.start						221 109
0: No						
In the case of direct motor control by motor relay K200 this signal is issued if the K200 contacts have not closed after the set monitoring time-delay has elapsed.						
MAIN: Startcmdtime exceed.						221 112
0: No				Fig. 3-205, (p. 3-258)		
If the monitoring, set by **DEV01: StartCmdTime superv.** (or **DEV02: StartCmdTime superv.** etc.), is active then an exceeded timer is flagged by this logic state signal.						

Parameter						Address
Default	Min	Max	Unit			Logic Diagram
MAIN: Mult. sig. 1 active						221 017
0: No				Fig. 3-70, (p. 3-107)		
MAIN: Mult. sig. 1 stored						221 054
0: No				Fig. 3-70, (p. 3-107)		
MAIN: Mult. sig. 2 active						221 053
0: No				Fig. 3-70, (p. 3-107)		
MAIN: Mult. sig. 2 stored						221 055
0: No				Fig. 3-70, (p. 3-107)		
MAIN: Group signal 01						019 192
0: No						
MAIN: Group signal 02						019 193
0: No						
MAIN: Group signal 03						019 194
0: No						
MAIN: Group signal 04						019 195
0: No						
MAIN: Group signal 05						019 196
0: No						
MAIN: Group signal 06						019 197
0: No						
MAIN: Group signal 07						019 198
0: No						
MAIN: Group signal 08						019 199
0: No						
MAIN: Communication error						221 019
1: Yes				Fig. 3-76, (p. 3-111)		
MAIN: Cmd. fr. comm.interf						221 101
0: No				Fig. 3-200, (p. 3-250)		
MAIN: Cmd. fr. electr.ctrl						221 103
0: No						
MAIN: Command from HMI						221 102
0: No						
MAIN: Device selection key						006 001
0: No				Fig. 3-200, (p. 3-250)		
MAIN: Device OPEN key						006 002
0: No				Fig. 3-200, (p. 3-250)		
MAIN: Device CLOSE key						006 003
0: No				Fig. 3-200, (p. 3-250)		

Parameter						Address
Default	Min	Max	Unit		Logic Diagram	
MAIN: Local/Remote key						006 004
0: No						
MAIN: SI commu. disturbed						221 031
1: Yes						
MAIN: Dummy entry						004 129
0: No						
MAIN: Without function						060 000
0: No						
MAIN: Without function						061 000
0: No						

Parameter subset selection

Parameter					Address
Default	Min	Max	Unit		Logic Diagram
PSS: Control via user EXT					036 101
0: No					
PSS: Activate PS 1 EXT					065 002
2: Not configured					
PSS: Activate PS 2 EXT					065 003
2: Not configured					
PSS: Activate PS 3 EXT					065 004
2: Not configured					
PSS: Activate PS 4 EXT					065 005
2: Not configured					
PSS: Control via user					036 102
0: No				Fig. 3-82, (p. 3-118)	
PSS: Ext.sel.param.subset					003 061
0: No param. subset sel				Fig. 3-82, (p. 3-118)	
PSS: PS 1 activated ext.					036 094
0: No				Fig. 3-82, (p. 3-118)	
PSS: PS 2 activated ext.					036 095
0: No				Fig. 3-82, (p. 3-118)	
PSS: PS 3 activated ext.					036 096
0: No				Fig. 3-82, (p. 3-118)	
PSS: PS 4 activated ext.					036 097
0: No				Fig. 3-82, (p. 3-118)	
PSS: Actual param. subset					003 062
1: Parameter subset 1				Fig. 3-82, (p. 3-118)	
PSS: PS 1 active					036 090
1: Yes				Fig. 3-82, (p. 3-118)	
PSS: PS 2 active					036 091
0: No				Fig. 3-82, (p. 3-118)	
PSS: PS 3 active					036 092
0: No				Fig. 3-82, (p. 3-118)	
PSS: PS 4 active					036 093
0: No				Fig. 3-82, (p. 3-118)	

Self-monitoring

Parameter						Address
Default	Min	Max	Unit		Logic Diagram	
SFMON: Warning (LED)						036 070
0: No				Fig. 3-83, (p. 3-119)		
SFMON: Warning (relay)						036 100
0: No				Fig. 3-83, (p. 3-119)		
SFMON: Warm restart exec.						041 202
0: No						
SFMON: Cold restart exec.						041 201
0: No						
SFMON: Cold restart						093 024
0: No						
SFMON: Cold rest./SW update						093 025
0: No						
SFMON: Blocking/ HW failure						090 019
0: No						
SFMON: Relay Kxx faulty						041 200
0: No						
SFMON: Hardware clock fail.						093 040
0: No						
SFMON: Battery failure						090 010
0: No						
SFMON: Invalid SW d.loaded						096 121
0: No						
SFMON: +15V supply faulty						093 081
0: No						
SFMON: +24V supply faulty						093 082
0: No						
SFMON: -15V supply faulty						093 080
0: No						
SFMON: Wrong module slot 1						096 100
0: No						
SFMON: Wrong module slot 2						096 101
0: No						
SFMON: Wrong module slot 3						096 102
0: No						
SFMON: Wrong module slot 4						096 103
0: No						
SFMON: Wrong module slot 5						096 104
0: No						

Parameter						Address
Default	Min	Max	Unit			Logic Diagram
SFMON: Wrong module slot 6						096 105
0: No						
SFMON: Wrong module slot 7						096 106
0: No						
SFMON: Wrong module slot 8						096 107
0: No						
SFMON: Wrong module slot 9						096 108
0: No						
SFMON: Wrong module slot 10						096 109
0: No						
SFMON: Wrong module slot 11						096 110
0: No						
SFMON: Wrong module slot 12						096 111
0: No						
SFMON: Wrong module slot 13						096 112
0: No						
SFMON: Wrong module slot 14						096 113
0: No						
SFMON: Wrong module slot 15						096 114
0: No						
SFMON: Wrong module slot 16						096 115
0: No						
SFMON: Wrong module slot 17						096 116
0: No						
SFMON: Wrong module slot 18						096 117
0: No						
SFMON: Wrong module slot 19						096 118
0: No						
SFMON: Wrong module slot 20						096 119
0: No						
SFMON: Wrong module slot 21						096 120
0: No						
SFMON: Wrong module Dig.Bus						096 123
0: No						
SFMON: Wrong module HMI						096 124
0: No						
SFMON: Wrong module Comm						096 125
0: No						

Parameter						Address
Default	Min	Max	Unit		Logic Diagram	
SFMON: Wrong module Ana.Bus						096 126
0: No						
SFMON: Defect.module slot 1						097 000
0: No						
SFMON: Defect.module slot 2						097 001
0: No						
SFMON: Defect.module slot 3						097 002
0: No						
SFMON: Defect.module slot 4						097 003
0: No						
SFMON: Defect.module slot 5						097 004
0: No						
SFMON: Defect.module slot 6						097 005
0: No						
SFMON: Defect.module slot 7						097 006
0: No						
SFMON: Defect.module slot 8						097 007
0: No						
SFMON: Defect.module slot 9						097 008
0: No						
SFMON: Defect.module slot10						097 009
0: No						
SFMON: Defect.module slot11						097 010
0: No						
SFMON: Defect.module slot12						097 011
0: No						
SFMON: Defect.module slot13						097 012
0: No						
SFMON: Defect.module slot14						097 013
0: No						
SFMON: Defect.module slot15						097 014
0: No						
SFMON: Defect.module slot16						097 015
0: No						
SFMON: Defect.module slot17						097 016
0: No						
SFMON: Defect.module slot18						097 017
0: No						

Parameter						Address
Default	Min	Max	Unit			Logic Diagram
SFMON: Defect.module slot19						097 018
0: No						
SFMON: Defect.module slot20						097 019
0: No						
SFMON: Defect.module slot21						097 020
0: No						
SFMON: Module A DPR faulty						093 070
0: No						
SFMON: Module A RAM faulty						093 071
0: No						
SFMON: Module Y DPR faulty						093 110
0: No						
SFMON: Module Y RAM faulty						093 111
0: No						
SFMON: Error K 901						097 094
0: No						
SFMON: Error K 902						097 095
0: No						
SFMON: Error K 903						097 096
0: No						
SFMON: Error K 904						097 097
0: No						
SFMON: Error K 905						097 098
0: No						
SFMON: Error K 906						097 099
0: No						
SFMON: Error K 907						097 100
0: No						
SFMON: Error K 908						097 101
0: No						
SFMON: Error K 1001						097 102
0: No						
SFMON: Error K 1002						097 103
0: No						
SFMON: Error K 1003						097 104
0: No						
SFMON: Error K 1004						097 105
0: No						

Parameter						Address
Default	Min	Max	Unit		Logic Diagram	
SFMON: Error K 1005						097 106
0: No						
SFMON: Error K 1006						097 107
0: No						
SFMON: Error K 1007						097 108
0: No						
SFMON: Error K 1008						097 109
0: No						
SFMON: Error K 1201						097 118
0: No						
SFMON: Error K 1202						097 119
0: No						
SFMON: Error K 1601						097 150
0: No						
SFMON: Error K 1602						097 151
0: No						
SFMON: Error K 1603						097 152
0: No						
SFMON: Error K 1604						097 153
0: No						
SFMON: Error K 1605						097 154
0: No						
SFMON: Error K 1606						097 155
0: No						
SFMON: Error K 1607						097 156
0: No						
SFMON: Error K 1608						097 157
0: No						
SFMON: Error K 1801						097 166
0: No						
SFMON: Error K 1802						097 167
0: No						
SFMON: Error K 1803						097 168
0: No						
SFMON: Error K 1804						097 169
0: No						
SFMON: Error K 1805						097 170
0: No						

Parameter						Address
Default	Min	Max	Unit			Logic Diagram
SFMON: Error K 1806						097 171
0: No						
SFMON: Error K 2001						097 182
0: No						
SFMON: Error K 2002						097 183
0: No						
SFMON: Error K 2003						097 184
0: No						
SFMON: Error K 2004						097 185
0: No						
SFMON: Error K 2005						097 186
0: No						
SFMON: Error K 2006						097 187
0: No						
SFMON: Error K 2007						097 188
0: No						
SFMON: Error K 2008						097 189
0: No						
SFMON: Undef. operat. code						093 010
0: No						
SFMON: Abnormal termination						093 030
0: No						
SFMON: Bad arg. system call						093 031
0: No						
SFMON: Mutex deadlock						093 032
0: No						
SFMON: Invalid memory ref.						093 033
0: No						
SFMON: Unexpected exception						093 034
0: No						
SFMON: Invalid arithm. op.						093 011
0: No						
SFMON: Undefined interrupt						093 012
0: No						
SFMON: Exception oper.syst.						093 013
0: No						
SFMON: Protection failure						090 021
0: No						

Parameter						Address
Default	Min	Max	Unit		Logic Diagram	
SFMON: Checksum error param						090 003
0: No						
SFMON: Clock sync. error						093 041
0: No						
SFMON: Interm.volt.fail.RAM						093 026
0: No						
SFMON: Overflow MT_RC						090 012
0: No				Fig. 3-85, (p. 3-123)		
SFMON: Semaph. MT_RC block.						093 015
0: No						
SFMON: Inval. SW vers.comm.						093 075
0: No						
SFMON: Inval. Config. IEC						093 079
0: No						
SFMON: Invalid SW vers. Y						093 113
0: No						
SFMON: Time-out module Y						093 112
0: No						
SFMON: M.c.b. trip V						098 000
0: No						
SFMON: Insul. Alarm 1						098 091
0: No						
SFMON: Insul. Alarm 2						098 092
0: No						
SFMON: Insul. Alarm 3						098 093
0: No						
SFMON: Buchholz Alarm 1						098 094
0: No						
SFMON: Buchholz Alarm 2						098 095
0: No						
SFMON: Buchholz Alarm 3						098 096
0: No						
SFMON: DC Faulty 1						098 097
0: No						
SFMON: DC Faulty 2						098 098
0: No						
SFMON: DC Faulty 3						098 099
0: No						

Parameter						Address
Default	Min	Max	Unit		Logic Diagram	
SFMON: Meas. circ. I faulty						091 018
0: No				Fig. 3-71, (p. 3-108) Fig. 3-170, (p. 3-218)		
SFMON: Meas. c. I faulty, a						091 026
0: No				Fig. 3-169, (p. 3-218)		
SFMON: Meas. c. I faulty, b						091 027
0: No						
SFMON: Meas. c. I faulty, c						091 028
0: No						
SFMON: Meas. c. I faulty, d						091 029
0: No						
SFMON: Invalid charact. V/f						091 011
0: No						
SFMON: Invalid SW vers DHMI						093 145
0: No						
SFMON: Invalid config.TPDx						093 160
0: No						
SFMON: Invalid scaling BCD						093 124
0: No						
SFMON: Invalid scaling A-1						093 114
0: No				Fig. 3-45, (p. 3-75)		
SFMON: Invalid scaling A-2						093 115
0: No						
SFMON: Invalid scaling IDC						093 116
0: No				Fig. 3-35, (p. 3-59)		
SFMON: PT100 open circuit						098 024
0: No				Fig. 3-37, (p. 3-61)		
SFMON: Overload 20 mA input						098 025
0: No				Fig. 3-35, (p. 3-59)		
SFMON: Open circ. 20mA inp.						098 026
0: No				Fig. 3-35, (p. 3-59)		
SFMON: Setting error f<>						098 028
0: No				Fig. 3-152, (p. 3-203)		
SFMON: Iref, a inval. range						091 007
0: No				Fig. 3-99, (p. 3-143)		
SFMON: Iref, b inval. range						091 008
0: No				Fig. 3-99, (p. 3-143)		

Parameter					Address
Default	Min	Max	Unit	Logic Diagram	
SFMON: Iref, c inval. range					091 009
0: No				Fig. 3-99, (p. 3-143)	
SFMON: Matching fail. end a					091 000
0: No				Fig. 3-99, (p. 3-143)	
SFMON: Matching fail. end b					091 001
0: No				Fig. 3-99, (p. 3-143)	
SFMON: Matching fail. end c					091 002
0: No				Fig. 3-99, (p. 3-143)	
SFMON: Ratio mtch.fact.inv.					091 004
0: No					
SFMON: 2nd match.fact. inv.					091 006
0: No				Fig. 3-99, (p. 3-143)	
SFMON: Inv.range Iref REF_1					091 105
0: No				Fig. 3-112, (p. 3-160)	
SFMON: Inv.range Iref REF_2					091 115
0: No					
SFMON: Inv.range Iref REF_3					091 125
0: No					
SFMON: Match.f. kam,N REF_1					091 101
0: No				Fig. 3-112, (p. 3-160)	
SFMON: Match.f. kam,Y REF_1					091 102
0: No				Fig. 3-112, (p. 3-160)	
SFMON: Match.f. kam,N REF_2					091 111
0: No					
SFMON: Match.f. kam,Y REF_2					091 112
0: No					
SFMON: Match.f. kam,N REF_3					091 121
0: No					
SFMON: Rat.mtch.f.inv.REF_1					091 103
0: No					
SFMON: Rat.mtch.f.inv.REF_2					091 113
0: No					
SFMON: Rat.mtch.f.inv.REF_3					091 123
0: No					
SFMON: Min.mtch.f.inv.REF_1					091 104
0: No				Fig. 3-112, (p. 3-160)	
SFMON: Min.mtch.f.inv.REF_2					091 114
0: No					

Parameter						Address
Default	Min	Max	Unit			Logic Diagram
SFMON: Min.mtch.f.inv.REF_3						091 124
0: No						
SFMON: CTA error THRM1						098 036
0: No				Fig. 3-143, (p. 3-194)		
SFMON: CTA error THRM2						098 037
0: No						
SFMON: Setting error THRM1						098 038
0: No				Fig. 3-144, (p. 3-195)		
SFMON: Setting error THRM2						098 039
0: No						
SFMON: Inv.inp.f.clock sync						093 120
0: No						
SFMON: Output 30						098 053
0: No						
SFMON: Output 30 (t)						098 054
0: No						
SFMON: Output 31						098 055
0: No						
SFMON: Output 31 (t)						098 056
0: No						
SFMON: Output 32						098 057
0: No						
SFMON: Output 32 (t)						098 058
0: No						
SFMON: CB1 pos.sig. implaus						098 124
0: No						
SFMON: CB2 pos.sig. implaus						098 125
0: No						
SFMON: CB3 pos.sig. implaus						098 126
0: No						
SFMON: CB1 faulty EXT						098 072
0: No						
SFMON: CB2 faulty EXT						098 129
0: No						
SFMON: CB3 faulty EXT						098 130
0: No						
SFMON: Unsuff. No. of ends						091 010
0: No						

Parameter						Address
Default	Min	Max	Unit			Logic Diagram
SFMON: Disc. end x invalid						091 012
0: No						

Operating data recording

Parameter						Address
Default	Min	Max	Unit			Logic Diagram
OP_RC: Reset record. EXT						005 213
0: No				Fig. 3-79, (p. 3-114)		

Monitoring signal recording

Parameter						Address
Default	Min	Max	Unit			Logic Diagram
MT_RC: Reset record. EXT						005 240
0: No						

Overload recording

Parameter						Address
Default	Min	Max	Unit			Logic Diagram
OL_RC: Reset record. EXT						005 241
0: No						
OL_RC: Record. in progress						035 003
0: No				Fig. 3-88, (p. 3-126)		
OL_RC: Overl. mem. overflow						035 007
0: No				Fig. 3-89, (p. 3-127)		

Fault recording

Parameter						Address
Default	Min	Max	Unit			Logic Diagram
FT_RC: Reset record. EXT						005 243
0: No						
FT_RC: Trigger EXT						036 089
0: No						
FT_RC: Trigger						037 076
0: No				Fig. 3-95, (p. 3-136)		
FT_RC: Id> triggered						035 018
0: No						
FT_RC: IR> triggered						035 019
0: No						
FT_RC: Record. in progress						035 000
0: No				Fig. 3-95, (p. 3-136)		
FT_RC: System disturb. runn						035 004
0: No				Fig. 3-95, (p. 3-136)		
FT_RC: Fault mem. overflow						035 001
0: No				Fig. 3-96, (p. 3-137)		
FT_RC: Faulty time tag						035 002
0: No						

Differential protection

Parameter						Address
Default	Min	Max	Unit		Logic Diagram	
DIFF: Blocking EXT						003 163
0: No				Fig. 3-98, (p. 3-141)		
DIFF: Enabled						041 210
0: No				Fig. 3-98, (p. 3-141)		
DIFF: Starting						041 106
0: No						
DIFF: Meas.system 1 trigg.						041 124
0: No				Fig. 3-106, (p. 3-152)		
DIFF: Meas.system 2 trigg.						041 125
0: No				Fig. 3-106, (p. 3-152)		
DIFF: Meas.system 3 trigg.						041 126
0: No				Fig. 3-106, (p. 3-152)		
DIFF: Id>> triggered						041 221
0: No				Fig. 3-106, (p. 3-152)		
DIFF: Id>>> triggered						041 222
0: No				Fig. 3-106, (p. 3-152)		
DIFF: Inrush blk. trigg.						019 213
0: No				Fig. 3-107, (p. 3-153)		
DIFF: Harm.block 1 trigg.						041 118
0: No				Fig. 3-107, (p. 3-153)		
DIFF: Harm.block 2 trigg.						041 119
0: No				Fig. 3-107, (p. 3-153)		
DIFF: Harm.block 3 trigg.						041 120
0: No				Fig. 3-107, (p. 3-153)		
DIFF: Overflux.bl. trigg.						019 202
0: No				Fig. 3-108, (p. 3-154)		
DIFF: Overflux.bl.1 trigg.						041 121
0: No				Fig. 3-108, (p. 3-154)		
DIFF: Overflux.bl.2 trigg.						041 122
0: No				Fig. 3-108, (p. 3-154)		
DIFF: Overflux.bl.3 trigg.						041 123
0: No				Fig. 3-108, (p. 3-154)		
DIFF: Harm.block. trigg.						019 214
0: No				Fig. 3-107, (p. 3-153)		
DIFF: Sat.discr. trigg.						019 201
0: No				Fig. 3-109, (p. 3-155)		

Parameter						Address
Default	Min	Max	Unit			Logic Diagram
DIFF: Sat.discr. 1 trigg.						041 115
0: No				Fig. 3-109, (p. 3-155)		
DIFF: Sat.discr. 2 trigg.						041 116
0: No				Fig. 3-109, (p. 3-155)		
DIFF: Sat.discr. 3 trigg.						041 117
0: No				Fig. 3-109, (p. 3-155)		
DIFF: Trip signal						041 075
0: No				Fig. 3-106, (p. 3-152)		
DIFF: Trip signal 1						041 002
0: No				Fig. 3-106, (p. 3-152)		
DIFF: Trip signal 2						041 003
0: No				Fig. 3-106, (p. 3-152)		
DIFF: Trip signal 3						041 004
0: No				Fig. 3-106, (p. 3-152)		

Ground differential protection

Parameter						Address
Default	Min	Max	Unit			Logic Diagram
REF_1: Blocking EXT						019 051
0: No						
REF_1: Enabled						041 132
0: No				Fig. 3-111, (p. 3-158)		
REF_1: Ready						019 054
0: No				Fig. 3-111, (p. 3-158)		
REF_1: Trip signal						041 005
0: No				Fig. 3-115, (p. 3-164)		

Ground differential protection

Parameter						Address
Default	Min	Max	Unit		Logic Diagram	
REF_2: Blocking EXT						019 052
0: No						
REF_2: Enabled						041 133
0: No						
REF_2: Ready						019 055
0: No						
REF_2: Trip signal						041 016
0: No						

Ground differential protection

Parameter						Address
Default	Min	Max	Unit		Logic Diagram	
REF_3: Blocking EXT						019 053
0: No						
REF_3: Enabled						041 134
0: No						
REF_3: Ready						019 056
0: No						
REF_3: Trip signal						041 067
0: No						

Definite-time overcurrent protection

Parameter					Address
Default	Min	Max	Unit		Logic Diagram
DTOC1: Block. tI> EXT					035 120
0: No					
DTOC1: Block. tI>> EXT					035 121
0: No					
DTOC1: Block. tI>>> EXT					035 122
0: No					
DTOC1: Block. tIneg> EXT					036 141
0: No					
DTOC1: Block. tIneg>> EXT					036 142
0: No					
DTOC1: Block. tIneg>>> EXT					036 143
0: No					
DTOC1: Block. tIN> EXT					035 123
0: No					
DTOC1: Block. tIN>> EXT					035 124
0: No					
DTOC1: Block. tIN>>> EXT					035 125
0: No					
DTOC1: Enabled					035 102
0: No				Fig. 3-119, (p. 3-169)	
DTOC1: General starting					035 128
0: No				Fig. 3-124, (p. 3-175)	
DTOC1: tGS elapsed					035 129
0: No				Fig. 3-124, (p. 3-175)	
DTOC1: Starting A					035 104
0: No					
DTOC1: Starting B					035 105
0: No					
DTOC1: Starting C					035 106
0: No					
DTOC1: Starting N					035 107
0: No					
DTOC1: Starting I>					035 108
0: No					
DTOC1: Starting I>>					035 109
0: No					

Parameter						Address
Default	Min	Max	Unit		Logic Diagram	
DTOC1: Starting I>>>						035 110
0: No						
DTOC1: Trip signal tI>						035 114
0: No						
DTOC1: Trip signal tI>>						035 115
0: No						
DTOC1: Trip signal tI>>>						035 116
0: No						
DTOC1: Starting Ineg						036 144
0: No				Fig. 3-122, (p. 3-172)		
DTOC1: Starting Ineg>						036 145
0: No				Fig. 3-122, (p. 3-172)		
DTOC1: Starting Ineg>>						036 146
0: No				Fig. 3-122, (p. 3-172)		
DTOC1: Starting Ineg>>>						036 147
0: No				Fig. 3-122, (p. 3-172)		
DTOC1: tIneg> elapsed						036 148
0: No				Fig. 3-122, (p. 3-172)		
DTOC1: tIneg>> elapsed						036 149
0: No				Fig. 3-122, (p. 3-172)		
DTOC1: tIneg>>> elapsed						036 150
0: No				Fig. 3-122, (p. 3-172)		
DTOC1: Trip signal tIneg>						036 151
0: No				Fig. 3-122, (p. 3-172)		
DTOC1: Trip signal tIneg>>						036 152
0: No				Fig. 3-122, (p. 3-172)		
DTOC1: Trip signal tIneg>>>						036 153
0: No				Fig. 3-122, (p. 3-172)		
DTOC1: Starting IN>						035 111
0: No						
DTOC1: Starting IN>>						035 112
0: No						
DTOC1: Starting IN>>>						035 113
0: No						
DTOC1: tIN> elapsed						035 117
0: No						
DTOC1: tIN>> elapsed						035 118
0: No						

Parameter					Address
Default	Min	Max	Unit		Logic Diagram
DTOC1: tIN>>> elapsed					035 119
0: No					
DTOC1: Trip signal tIN>					035 126
0: No					
DTOC1: Trip signal tIN>>					035 130
0: No					
DTOC1: Trip signal tIN>>>					035 131
0: No					
DTOC1: Trip signal					019 215
0: No					

Definite-time over-current protection

Parameter						Address
Default	Min	Max	Unit			Logic Diagram
DTOC2: Block. tI> EXT						035 150
0: No						
DTOC2: Block. tI>> EXT						035 151
0: No						
DTOC2: Block. tI>>> EXT						035 229
0: No						
DTOC2: Block. tIneg> EXT						036 161
0: No						
DTOC2: Block. tIneg>> EXT						036 162
0: No						
DTOC2: Block. tIneg>>> EXT						036 163
0: No						
DTOC2: Block. tIN> EXT						035 230
0: No						
DTOC2: Block. tIN>> EXT						035 231
0: No						
DTOC2: Block. tIN>>> EXT						035 232
0: No						
DTOC2: Enabled						035 132
0: No						
DTOC2: General starting						035 234
0: No						
DTOC2: tGS elapsed						035 245
0: No						
DTOC2: Starting A						035 134
0: No						
DTOC2: Starting B						035 135
0: No						
DTOC2: Starting C						035 141
0: No						
DTOC2: Starting N						035 146
0: No						
DTOC2: Starting I>						035 138
0: No						
DTOC2: Starting I>>						035 139
0: No						

Parameter						Address
Default	Min	Max	Unit		Logic Diagram	
DTOC2: Starting I>>>						035 149
0: No						
DTOC2: Trip signal tI>						035 144
0: No						
DTOC2: Trip signal tI>>						035 145
0: No						
DTOC2: Trip signal tI>>>						035 158
0: No						
DTOC2: Starting Ineg						036 164
0: No						
DTOC2: Starting Ineg>						036 165
0: No						
DTOC2: Starting Ineg>>						036 166
0: No						
DTOC2: Starting Ineg>>>						036 167
0: No						
DTOC2: tIneg> elapsed						036 168
0: No						
DTOC2: tIneg>> elapsed						036 169
0: No						
DTOC2: tIneg>>> elapsed						036 170
0: No						
DTOC2: Trip signal tIneg>						036 171
0: No						
DTOC2: Trip signal tIneg>>						036 172
0: No						
DTOC2: Trip signal tIneg>>>						036 173
0: No						
DTOC2: Starting IN>						035 152
0: No						
DTOC2: Starting IN>>						035 153
0: No						
DTOC2: Starting IN>>>						035 154
0: No						
DTOC2: tIN> elapsed						035 159
0: No						
DTOC2: tIN>> elapsed						035 225
0: No						

Parameter						Address
Default	Min	Max	Unit		Logic	Diagram
DTOC2: tIN>>> elapsed						035 226
0: No						
DTOC2: Trip signal tIN>						035 233
0: No						
DTOC2: Trip signal tIN>>						035 246
0: No						
DTOC2: Trip signal tIN>>>						035 247
0: No						
DTOC2: Trip signal						019 216
0: No						

Definite-time over-current protection

Parameter						Address
Default	Min	Max	Unit			Logic Diagram
DTOC3: Block. tI> EXT						035 237
0: No						
DTOC3: Block. tI>> EXT						035 238
0: No						
DTOC3: Block. tI>>> EXT						035 239
0: No						
DTOC3: Block. tIneg> EXT						036 181
0: No						
DTOC3: Block. tIneg>> EXT						036 182
0: No						
DTOC3: Block. tIneg>>> EXT						036 183
0: No						
DTOC3: Block. tIN> EXT						035 240
0: No						
DTOC3: Block. tIN>> EXT						035 241
0: No						
DTOC3: Block. tIN>>> EXT						035 242
0: No						
DTOC3: Enabled						035 136
0: No						
DTOC3: General starting						035 244
0: No						
DTOC3: tGS elapsed						035 250
0: No						
DTOC3: Starting A						035 180
0: No						
DTOC3: Starting B						035 185
0: No						
DTOC3: Starting C						035 186
0: No						
DTOC3: Starting N						035 187
0: No						
DTOC3: Starting I>						035 188
0: No						
DTOC3: Starting I>>						035 189
0: No						

Parameter						Address
Default	Min	Max	Unit		Logic Diagram	
DTOC3: Starting I>>>						035 190
0: No						
DTOC3: Trip signal tI>						035 205
0: No						
DTOC3: Trip signal tI>>						035 206
0: No						
DTOC3: Trip signal tI>>>						035 208
0: No						
DTOC3: Starting Ineg						036 184
0: No						
DTOC3: Starting Ineg>						036 185
0: No						
DTOC3: Starting Ineg>>						036 186
0: No						
DTOC3: Starting Ineg>>>						036 187
0: No						
DTOC3: tIneg> elapsed						036 188
0: No						
DTOC3: tIneg>> elapsed						036 189
0: No						
DTOC3: tIneg>>> elapsed						036 190
0: No						
DTOC3: Trip signal tIneg>						036 191
0: No						
DTOC3: Trip signal tIneg>>						036 192
0: No						
DTOC3: Trip signal tIneg>>>						036 193
0: No						
DTOC3: Starting IN>						035 202
0: No						
DTOC3: Starting IN>>						035 203
0: No						
DTOC3: Starting IN>>>						035 204
0: No						
DTOC3: tIN> elapsed						035 209
0: No						
DTOC3: tIN>> elapsed						035 235
0: No						

Parameter						Address
Default	Min	Max	Unit			Logic Diagram
DTOC3: tIN>>> elapsed						035 236
0: No						
DTOC3: Trip signal tIN>						035 243
0: No						
DTOC3: Trip signal tIN>>						035 251
0: No						
DTOC3: Trip signal tIN>>>						035 252
0: No						
DTOC3: Trip signal						019 217
0: No						

Inverse-time overcurrent protection

Parameter						Address
Default	Min	Max	Unit		Logic	Diagram
IDMT1: Block. tIref,P> EXT						038 114
0: No						
IDMT1: Block.tIref,neg> EXT						038 178
0: No						
IDMT1: Block. tIref,N> EXT						038 124
0: No						
IDMT1: Enabled						038 125
0: No				Fig. 3-127, (p. 3-177)		
IDMT1: General starting						038 115
0: No				Fig. 3-136, (p. 3-188)		
IDMT1: tGS elapsed						038 116
0: No				Fig. 3-136, (p. 3-188)		
IDMT1: Starting Iref,P>						038 110
0: No				Fig. 3-132, (p. 3-182)		
IDMT1: Starting Iref,A>						038 117
0: No				Fig. 3-132, (p. 3-182)		
IDMT1: Starting Iref,B>						038 118
0: No				Fig. 3-132, (p. 3-182)		
IDMT1: Starting Iref,C>						038 119
0: No				Fig. 3-132, (p. 3-182)		
IDMT1: tIref,P> elapsed						038 111
0: No				Fig. 3-132, (p. 3-182)		
IDMT1: Hold time P running						038 112
0: No				Fig. 3-132, (p. 3-182)		
IDMT1: Memory P clear						038 113
1: Yes				Fig. 3-132, (p. 3-182)		
IDMT1: Starting Iref,neg>						038 173
0: No				Fig. 3-133, (p. 3-184)		
IDMT1: tIref,neg> elapsed						038 174
0: No				Fig. 3-133, (p. 3-184)		
IDMT1: Trip sig. tIref,neg>						038 177
0: No				Fig. 3-133, (p. 3-184)		
IDMT1: Hold time neg runn.						038 175
0: No				Fig. 3-133, (p. 3-184)		
IDMT1: Memory 'neg' clear						038 176
1: Yes				Fig. 3-133, (p. 3-184)		

Parameter						Address
Default	Min	Max	Unit			Logic Diagram
IDMT1: Starting Iref,N>						038 120
0: No				Fig. 3-134, (p. 3-185)		
IDMT1: tIref,N> elapsed						038 121
0: No				Fig. 3-134, (p. 3-185)		
IDMT1: Trip signal tIref,N>						038 126
0: No				Fig. 3-134, (p. 3-185)		
IDMT1: Hold time N running						038 122
0: No				Fig. 3-134, (p. 3-185)		
IDMT1: Memory N clear						038 123
1: Yes				Fig. 3-134, (p. 3-185)		

Inverse-time overcurrent protection

Parameter					Address
Default	Min	Max	Unit		Logic Diagram
IDMT2: Block. tIref,P> EXT					038 134
0: No					
IDMT2: Block.tIref,neg> EXT					038 188
0: No					
IDMT2: Block. tIref,N> EXT					038 144
0: No					
IDMT2: Enabled					038 145
0: No					
IDMT2: General starting					038 135
0: No					
IDMT2: tGS elapsed					038 136
0: No					
IDMT2: Starting Iref,P>					038 130
0: No					
IDMT2: Starting Iref,A>					038 137
0: No					
IDMT2: Starting Iref,B>					038 138
0: No					
IDMT2: Starting Iref,C>					038 139
0: No					
IDMT2: tIref,P> elapsed					038 131
0: No					
IDMT2: Hold time P running					038 132
0: No					
IDMT2: Memory P clear					038 133
1: Yes					
IDMT2: Starting Iref,neg>					038 183
0: No					
IDMT2: tIref,neg> elapsed					038 184
0: No					
IDMT2: Trip sig. tIref,neg>					038 187
0: No					
IDMT2: Hold time neg runn.					038 185
0: No					
IDMT2: Memory 'neg' clear					038 186
1: Yes					

Parameter						Address
Default	Min	Max	Unit			Logic Diagram
IDMT2: Starting Iref,N>						038 140
0: No						
IDMT2: tIref,N> elapsed						038 141
0: No						
IDMT2: Trip signal tIref,N>						038 146
0: No						
IDMT2: Hold time N running						038 142
0: No						
IDMT2: Memory N clear						038 143
1: Yes						

Inverse-time overcurrent protection

Parameter					Address
Default	Min	Max	Unit		Logic Diagram
IDMT3: Block. tIref,P> EXT					038 154
0: No					
IDMT3: Block.tIref,neg> EXT					038 198
0: No					
IDMT3: Block. tIref,N> EXT					038 164
0: No					
IDMT3: Enabled					038 165
0: No					
IDMT3: General starting					038 155
0: No					
IDMT3: tGS elapsed					038 156
0: No					
IDMT3: Starting Iref,P>					038 150
0: No					
IDMT3: Starting Iref,A>					038 157
0: No					
IDMT3: Starting Iref,B>					038 158
0: No					
IDMT3: Starting Iref,C>					038 159
0: No					
IDMT3: tIref,P> elapsed					038 151
0: No					
IDMT3: Hold time P running					038 152
0: No					
IDMT3: Memory P clear					038 153
1: Yes					
IDMT3: Starting Iref,neg>					038 193
0: No					
IDMT3: tIref,neg> elapsed					038 194
0: No					
IDMT3: Trip sig. tIref,neg>					038 197
0: No					
IDMT3: Hold time neg runn.					038 195
0: No					
IDMT3: Memory 'neg' clear					038 196
1: Yes					

Parameter					Address
Default	Min	Max	Unit		Logic Diagram
IDMT3: Starting Iref,N>					038 160
0: No					
IDMT3: tIref,N> elapsed					038 161
0: No					
IDMT3: Trip signal tIref,N>					038 166
0: No					
IDMT3: Hold time N running					038 162
0: No					
IDMT3: Memory N clear					038 163
1: Yes					

Thermal overload protection

Parameter						Address
Default	Min	Max	Unit		Logic Diagram	
THRM1: Replica block EXT						039 150
0: No						
THRM1: CTA error EXT						039 152
0: No						
THRM1: Reset replica EXT						039 122
0: No						
THRM1: Enabled						039 129
0: No				Fig. 3-139, (p. 3-190)		
THRM1: Not ready						039 154
1: Yes				Fig. 3-140, (p. 3-190)		
THRM1: Reset replica						039 125
0: No				Fig. 3-145, (p. 3-196)		
THRM1: Buffer empty						039 128
1: Yes						
THRM1: CTA error						039 127
0: No				Fig. 3-143, (p. 3-194)		
THRM1: Starting k*Iref>						039 151
0: No				Fig. 3-144, (p. 3-195)		
THRM1: Within pre-trip time						039 153
1: Yes				Fig. 3-144, (p. 3-195)		
THRM1: Warning						039 124
0: No				Fig. 3-144, (p. 3-195)		
THRM1: Trip signal						039 123
0: No				Fig. 3-144, (p. 3-195)		
THRM1: Setting error,block.						039 126
0: No				Fig. 3-144, (p. 3-195)		

Thermal overload protection

Parameter					Address
Default	Min	Max	Unit		Logic Diagram
THRM2: Replica block EXT					039 170
0: No					
THRM2: CTA error EXT					039 172
0: No					
THRM2: Reset replica EXT					039 182
0: No					
THRM2: Enabled					039 189
0: No					
THRM2: Not ready					039 174
1: Yes					
THRM2: Reset replica					039 185
0: No					
THRM2: Buffer empty					039 188
1: Yes					
THRM2: CTA error					039 187
0: No					
THRM2: Starting k*Iref>					039 171
0: No					
THRM2: Within pre-trip time					039 173
1: Yes					
THRM2: Warning					039 184
0: No					
THRM2: Trip signal					039 183
0: No					
THRM2: Setting error,block.					039 186
0: No					

Time-voltage protection

Parameter						Address
Default	Min	Max	Unit		Logic	Diagram
V<>: Blocking tV> EXT						041 068
0: No						
V<>: Blocking tV>> EXT						041 069
0: No						
V<>: Blocking tV< EXT						041 070
0: No						
V<>: Blocking tV<< EXT						041 071
0: No						
V<>: Enabled						040 066
0: No				Fig. 3-146, (p. 3-197)		
V<>: Ready						042 003
0: No				Fig. 3-146, (p. 3-197)		
V<>: Not ready						042 004
0: No				Fig. 3-146, (p. 3-197)		
V<>: Starting V>						041 030
0: No				Fig. 3-147, (p. 3-198)		
V<>: Starting V>>						041 096
0: No				Fig. 3-147, (p. 3-198)		
V<>: tV> elapsed						041 034
0: No				Fig. 3-147, (p. 3-198)		
V<>: tV>> elapsed						041 035
0: No				Fig. 3-147, (p. 3-198)		
V<>: tV>/>> elapsed						019 220
0: No				Fig. 3-147, (p. 3-198)		
V<>: Starting V<						041 037
0: No				Fig. 3-148, (p. 3-199)		
V<>: Starting V<<						041 099
0: No				Fig. 3-148, (p. 3-199)		
V<>: tV< elapsed						041 041
0: No				Fig. 3-148, (p. 3-199)		
V<>: tV</<< elapsed						019 219
0: No				Fig. 3-148, (p. 3-199)		
V<>: tV< elapsed & Vmin>						041 026
0: No				Fig. 3-148, (p. 3-199)		
V<>: tV</<< elaps. &Vmin>						019 221
0: No				Fig. 3-148, (p. 3-199)		

Parameter						Address
Default	Min	Max	Unit			Logic Diagram
V<>: tV< elaps. transient						042 023
0: No				Fig. 3-148, (p. 3-199)		
V<>: Fault V<						041 110
0: No				Fig. 3-148, (p. 3-199)		
V<>: tV<< elapsed						041 042
0: No				Fig. 3-148, (p. 3-199)		
V<>: tV<< elapsed & Vmin>						041 066
0: No				Fig. 3-148, (p. 3-199)		
V<>: tV<< elapsed trans.						042 025
0: No				Fig. 3-148, (p. 3-199)		
V<>: Fault V<<						041 112
0: No				Fig. 3-148, (p. 3-199)		
V<>: tV</<< elaps. trans.						042 007
0: No				Fig. 3-148, (p. 3-199)		

Over-/ underfrequency protection

Parameter						Address
Default	Min	Max	Unit		Logic Diagram	
f<>: Reset meas.val. EXT						006 075
0: No						
f<>: Blocking f1 EXT						042 103
0: No						
f<>: Blocking f2 EXT						042 104
0: No						
f<>: Blocking f3 EXT						042 105
0: No						
f<>: Blocking f4 EXT						042 106
0: No						
f<>: Enabled						042 100
0: No					Fig. 3-149, (p. 3-200)	
f<>: Ready						042 101
0: No					Fig. 3-149, (p. 3-200)	
f<>: Not ready						042 140
0: No					Fig. 3-149, (p. 3-200)	
f<>: Blocked by V<						042 102
0: No					Fig. 3-149, (p. 3-200) Fig. 3-150, (p. 3-201)	
f<>: Starting f1						042 107
0: No					Fig. 3-152, (p. 3-203)	
f<>: Starting f1/df1						042 108
0: No					Fig. 3-152, (p. 3-203)	
f<>: Delta f1 triggered						042 109
0: No					Fig. 3-152, (p. 3-203)	
f<>: Delta t1 elapsed						042 110
0: No					Fig. 3-152, (p. 3-203)	
f<>: Trip signal f1						042 111
0: No					Fig. 3-152, (p. 3-203)	
f<>: Starting f2						042 115
0: No						
f<>: Starting f2/df2						042 116
0: No						
f<>: Delta f2 triggered						042 117
0: No						

Parameter						Address
Default	Min	Max	Unit			Logic Diagram
f<>: Delta t2 elapsed						042 118
0: No						
f<>: Trip signal f2						042 119
0: No						
f<>: Starting f3						042 123
0: No						
f<>: Starting f3/df3						042 124
0: No						
f<>: Delta f3 triggered						042 125
0: No						
f<>: Delta t3 elapsed						042 126
0: No						
f<>: Trip signal f3						042 127
0: No						
f<>: Starting f4						042 131
0: No						
f<>: Starting f4/df4						042 132
0: No						
f<>: Delta f4 triggered						042 133
0: No						
f<>: Delta t4 elapsed						042 134
0: No						
f<>: Trip signal f4						042 135
0: No						

Overfluxing protection

Parameter						Address
Default	Min	Max	Unit			Logic Diagram
V/f: Block. tV/f> EXT						035 196
0: No						
V/f: Block. replica EXT						035 197
0: No						
V/f: Block. tV/f>> EXT						035 199
0: No						
V/f: Reset replica EXT						035 182
0: No						
V/f: Enabled						041 229
0: No				Fig. 3-153, (p. 3-205)		
V/f: Reset replica						035 184
0: No				Fig. 3-160, (p. 3-210)		
V/f: Starting V/f>						041 230
0: No				Fig. 3-155, (p. 3-206)		
V/f: tV/f> elapsed						041 231
0: No				Fig. 3-155, (p. 3-206)		
V/f: Starting V/f(t)						041 232
0: No				Fig. 3-159, (p. 3-209)		
V/f: Trip signal tV/f(t)						041 233
0: No				Fig. 3-159, (p. 3-209)		
V/f: Starting V/f>>						041 234
0: No				Fig. 3-156, (p. 3-206)		
V/f: tV/f>> elapsed						041 235
0: No				Fig. 3-156, (p. 3-206)		
V/f: Buffer empty						041 236
1: Yes				Fig. 3-159, (p. 3-209)		

Current transformer supervision

Parameter						Address
Default	Min	Max	Unit			Logic Diagram
CTS: Blocking EXT						036 160
0: No						
CTS: Reset latch. EXT						036 158
0: No						
CTS: Enabled						036 080
0: No				Fig. 3-161, (p. 3-211)		
CTS: Reset latching						036 159
0: No						
CTS: Operated (updating)						036 099
0: No				Fig. 3-166, (p. 3-215)		
CTS: Operated (latched)						036 202
0: No				Fig. 3-166, (p. 3-215)		
CTS: Idiff>(CTS)active						036 203
0: No				Fig. 3-166, (p. 3-215)		
CTS: Alarm end a (updat.)						036 081
0: No				Fig. 3-167, (p. 3-216)		
CTS: Alarm end a (latch.)						036 204
0: No				Fig. 3-167, (p. 3-216)		
CTS: Alarm end a						036 205
0: No				Fig. 3-167, (p. 3-216)		
CTS: Alarm end b (updat.)						036 082
0: No						
CTS: Alarm end b (latch.)						036 206
0: No						
CTS: Alarm end b						036 207
0: No						
CTS: Alarm end c (updat.)						036 083
0: No						
CTS: Alarm end c (latch.)						036 208
0: No						
CTS: Alarm end c						036 209
0: No						

Measuring-circuit monitoring

Parameter					Address
Default	Min	Max	Unit	Logic Diagram	
MCM_1: Blocking EXT					036 213
0: No					
MCM_1: Enabled					036 194
0: No				Fig. 3-168, (p. 3-217)	
MCM_1: Meas. circ. I faulty					036 198
0: No				Fig. 3-169, (p. 3-218)	
MCM_1: Starting					036 212
0: No				Fig. 3-169, (p. 3-218)	

Measuring-circuit monitoring

Parameter					Address
Default	Min	Max	Unit	Logic Diagram	
MCM_2: Blocking EXT					036 215
0: No					
MCM_2: Enabled					036 195
0: No					
MCM_2: Meas. circ. I faulty					036 199
0: No					
MCM_2: Starting					036 214
0: No					

Measuring-circuit monitoring

Parameter					Address
Default	Min	Max	Unit	Logic Diagram	
MCM_3: Blocking EXT					036 217
0: No					
MCM_3: Enabled					036 196
0: No					
MCM_3: Meas. circ. I faulty					036 200
0: No					
MCM_3: Starting					036 216
0: No					

Circuit breaker failure protection

Parameter						Address
Default	Min	Max	Unit			Logic Diagram
CBF_1: Enable EXT						038 041
2: Not configured						
CBF_1: Disable EXT						038 042
2: Not configured						
CBF_1: Blocking EXT						038 058
0: No						
CBF_1: CB faulty EXT						038 234
0: No						
CBF_1: Start enable EXT						038 209
1: Yes						
CBF_1: Start 3p EXT						038 205
0: No						
CBF_1: Starting trig. EXT						038 016
0: No						
CBF_1: Ext./user enabled						038 040
1: Yes				Fig. 3-171, (p. 3-220)		
CBF_1: Enabled						040 055
0: No				Fig. 3-171, (p. 3-220)		
CBF_1: Ready						038 009
0: No				Fig. 3-172, (p. 3-221)		
CBF_1: Not ready						040 025
1: Yes				Fig. 3-172, (p. 3-221)		
CBF_1: Startup 3p						038 211
0: No				Fig. 3-175, (p. 3-224)		
CBF_1: Trip signal t1						038 215
0: No				Fig. 3-176, (p. 3-225)		
CBF_1: Trip signal t2						038 219
0: No				Fig. 3-176, (p. 3-225)		
CBF_1: Trip command t1						038 220
0: No				Fig. 3-177, (p. 3-226)		
CBF_1: Trip command t2						038 224
0: No				Fig. 3-177, (p. 3-226)		
CBF_1: CB failure						043 181
0: No						
CBF_1: Starting						038 021
0: No				Fig. 3-178, (p. 3-226)		

Parameter						Address
Default	Min	Max	Unit		Logic Diagram	
CBF_1: Trip signal						040 026
0: No				Fig. 3-178, (p. 3-226)		
CBF_1: CB pos. implausible						038 210
0: No				Fig. 3-174, (p. 3-223)		
CBF_1: Fault behind CB						038 225
0: No				Fig. 3-179, (p. 3-227)		
CBF_1: CBsync.superv A open						038 227
0: No				Fig. 3-180, (p. 3-227)		
CBF_1: CBsync.superv B open						038 228
0: No				Fig. 3-180, (p. 3-227)		
CBF_1: CBsync.superv C open						038 229
0: No				Fig. 3-180, (p. 3-227)		
CBF_1: TripSig CBsync.super						038 226
0: No				Fig. 3-180, (p. 3-227)		
CBF_1: Current flow A						038 230
0: No				Fig. 3-173, (p. 3-222)		
CBF_1: Current flow B						038 231
0: No				Fig. 3-173, (p. 3-222)		
CBF_1: Current flow C						038 232
0: No				Fig. 3-173, (p. 3-222)		
CBF_1: Current flow Phx						038 233
0: No				Fig. 3-173, (p. 3-222)		
CBF_1: Current flow N						038 235
0: No				Fig. 3-173, (p. 3-222)		
Signal that the residual current is greater than the set value **CBF_1: IN<**.						

Circuit breaker failure protection

Parameter						Address
Default	Min	Max	Unit			Logic Diagram
CBF_2: Enable EXT						043 070
2: Not configured						
CBF_2: Disable EXT						043 071
2: Not configured						
CBF_2: Blocking EXT						043 072
0: No						
CBF_2: CB faulty EXT						043 177
0: No						
CBF_2: Start enable EXT						043 085
1: Yes						
CBF_2: Start 3p EXT						043 084
0: No						
CBF_2: Starting trig. EXT						043 083
0: No						
CBF_2: Ext./user enabled						043 073
1: Yes						
CBF_2: Enabled						043 074
0: No						
CBF_2: Ready						043 076
0: No						
CBF_2: Not ready						043 077
1: Yes						
CBF_2: Startup 3p						043 087
0: No						
CBF_2: Trip signal t1						043 088
0: No						
CBF_2: Trip signal t2						043 089
0: No						
CBF_2: Trip command t1						043 090
0: No						
CBF_2: Trip command t2						043 091
0: No						
CBF_2: CB failure						043 182
0: No						
CBF_2: Starting						043 042
0: No						

Parameter						Address
Default	Min	Max	Unit			Logic Diagram
CBF_2: Trip signal						043 046
0: No						
CBF_2: CB pos. implausible						043 086
0: No						
CBF_2: Fault behind CB						043 092
0: No						
CBF_2: CBsync.superv A open						043 094
0: No						
CBF_2: CBsync.superv B open						043 095
0: No						
CBF_2: CBsync.superv C open						043 096
0: No						
CBF_2: TripSig CBsync.super						043 093
0: No						
CBF_2: Current flow A						043 164
0: No						
CBF_2: Current flow B						043 165
0: No						
CBF_2: Current flow C						043 166
0: No						
CBF_2: Current flow Phx						043 167
0: No						
CBF_2: Current flow N						043 185
0: No						

Circuit breaker failure protection

Parameter						Address
Default	Min	Max	Unit			Logic Diagram
CBF_3: Enable EXT						043 100
2: Not configured						
CBF_3: Disable EXT						043 101
2: Not configured						
CBF_3: Blocking EXT						043 102
0: No						
CBF_3: CB faulty EXT						043 178
0: No						
CBF_3: Start enable EXT						043 115
1: Yes						
CBF_3: Start 3p EXT						043 114
0: No						
CBF_3: Starting trig. EXT						043 113
0: No						
CBF_3: Ext./user enabled						043 103
1: Yes						
CBF_3: Enabled						043 104
0: No						
CBF_3: Ready						043 106
0: No						
CBF_3: Not ready						043 107
1: Yes						
CBF_3: Startup 3p						043 117
0: No						
CBF_3: Trip signal t1						043 118
0: No						
CBF_3: Trip signal t2						043 119
0: No						
CBF_3: Trip command t1						043 120
0: No						
CBF_3: Trip command t2						043 121
0: No						
CBF_3: CB failure						043 183
0: No						
CBF_3: Starting						043 043
0: No						

Parameter						Address
Default	Min	Max	Unit			Logic Diagram
CBF_3: Trip signal						043 047
0: No						
CBF_3: CB pos. implausible						043 116
0: No						
CBF_3: Fault behind CB						043 122
0: No						
CBF_3: CBsync.superv A open						043 124
0: No						
CBF_3: CBsync.superv B open						043 125
0: No						
CBF_3: CBsync.superv C open						043 126
0: No						
CBF_3: TripSig CBsync.super						043 123
0: No						
CBF_3: Current flow A						043 168
0: No						
CBF_3: Current flow B						043 169
0: No						
CBF_3: Current flow C						043 170
0: No						
CBF_3: Current flow Phx						043 171
0: No						
CBF_3: Current flow N						043 186
0: No						

Limit value monitoring

Parameter						Address
Default	Min	Max	Unit			Logic Diagram
LIMIT: Enabled						040 074
0: No				Fig. 3-181, (p. 3-229)		
LIMIT: Starting IDC,lin>						040 180
0: No				Fig. 3-181, (p. 3-229)		
LIMIT: Starting IDC,lin>>						040 181
0: No				Fig. 3-181, (p. 3-229)		
LIMIT: tIDC,lin> elapsed						040 182
0: No				Fig. 3-181, (p. 3-229)		
LIMIT: tIDC,lin>> elapsed						040 183
0: No				Fig. 3-181, (p. 3-229)		
LIMIT: Starting IDC,lin<						040 184
0: No				Fig. 3-181, (p. 3-229)		
LIMIT: Starting IDC,lin<<						040 185
0: No				Fig. 3-181, (p. 3-229)		
LIMIT: tIDC,lin< elapsed						040 186
0: No				Fig. 3-181, (p. 3-229)		
LIMIT: tIDC,lin<< elapsed						040 187
0: No				Fig. 3-181, (p. 3-229)		
LIMIT: Starting T>						040 170
0: No				Fig. 3-182, (p. 3-230)		
LIMIT: Starting T>>						040 171
0: No				Fig. 3-182, (p. 3-230)		
LIMIT: tT> elapsed						040 172
0: No				Fig. 3-182, (p. 3-230)		
LIMIT: tT>> elapsed						040 173
0: No				Fig. 3-182, (p. 3-230)		
LIMIT: Starting T<						040 174
0: No				Fig. 3-182, (p. 3-230)		
LIMIT: Starting T<<						040 175
0: No				Fig. 3-182, (p. 3-230)		
LIMIT: tT< elapsed						040 176
0: No				Fig. 3-182, (p. 3-230)		
LIMIT: tT<< elapsed						040 177
0: No				Fig. 3-182, (p. 3-230)		

Limit value monitoring

Parameter						Address
Default	Min	Max	Unit			Logic Diagram
LIM_1: Enabled						040 123
0: No				Fig. 3-184, (p. 3-232)		
LIM_1: tI> elapsed						040 122
0: No				Fig. 3-184, (p. 3-232)		
LIM_1: tI>> elapsed						037 201
0: No				Fig. 3-184, (p. 3-232)		
LIM_1: tI< elapsed						037 202
0: No				Fig. 3-184, (p. 3-232)		
LIM_1: tI<< elapsed						037 203
0: No				Fig. 3-184, (p. 3-232)		

Limit value monitoring

Parameter						Address
Default	Min	Max	Unit			Logic Diagram
LIM_2: Enabled						040 125
0: No						
LIM_2: tI> elapsed						040 124
0: No						
LIM_2: tI>> elapsed						038 201
0: No						
LIM_2: tI< elapsed						038 202
0: No						
LIM_2: tI<< elapsed						038 203
0: No						

Limit value monitoring

Parameter						Address
Default	Min	Max	Unit			Logic Diagram
LIM_3: Enabled						040 127
0: No						
LIM_3: tI> elapsed						040 126
0: No						
LIM_3: tI>> elapsed						039 201
0: No						
LIM_3: tI< elapsed						039 202
0: No						
LIM_3: tI<< elapsed						039 203
0: No						

Transformer monitoring

Parameter						Address
Default	Min	Max	Unit		Logic Diagram	
TRMON: DC Faulty 1 EXT						024 014
0: No						
TRMON: Insul. Alarm 1 EXT						016 241
0: No						
TRMON: Buchholz Alarm 1 EXT						016 242
0: No						
TRMON: Buchholz Trip 1 EXT						016 243
0: No						
TRMON: DC Faulty 2 EXT						024 019
0: No						
TRMON: Insul. Alarm 2 EXT						016 244
0: No						
TRMON: Buchholz Alarm 2 EXT						016 245
0: No						
TRMON: Buchholz Trip 2 EXT						016 246
0: No						
TRMON: DC Faulty 3 EXT						024 026
0: No						
TRMON: Insul. Alarm 3 EXT						016 247
0: No						
TRMON: Buchholz Alarm 3 EXT						016 248
0: No						
TRMON: Buchholz Trip 3 EXT						016 249
0: No						
TRMON: DC Faulty 1						024 018
0: No						
TRMON: Insul. Alarm 1						016 250
0: No					Fig. 3-185, (p. 3-233)	
TRMON: Buchholz Alarm 1						016 251
0: No					Fig. 3-185, (p. 3-233)	
TRMON: Buchholz Trip 1						016 252
0: No					Fig. 3-185, (p. 3-233)	
TRMON: DC Faulty 2						024 020
0: No						
TRMON: Insul. Alarm 2						016 253
0: No					Fig. 3-185, (p. 3-233)	

Parameter						Address
Default	Min	Max	Unit			Logic Diagram
TRMON: Buchholz Alarm 2						016 254
0: No				Fig. 3-185, (p. 3-233)		
TRMON: Buchholz Trip 2						016 255
0: No				Fig. 3-185, (p. 3-233)		
TRMON: DC Faulty 3						024 036
0: No						
TRMON: Insul. Alarm 3						018 007
0: No				Fig. 3-185, (p. 3-233)		
TRMON: Buchholz Alarm 3						018 016
0: No				Fig. 3-185, (p. 3-233)		
TRMON: Buchholz Trip 3						018 039
0: No				Fig. 3-185, (p. 3-233)		

Programmable Logic

Parameter						Address
Default	Min	Max	Unit			Logic Diagram
LOG_2: Enabled						011 138
0: No				Fig. 3-188, (p. 3-237)		
LOG_2: Output 1						052 032
0: No				Fig. 3-188, (p. 3-237)		
LOG_2: Output 1 (t)						052 033
0: No				Fig. 3-188, (p. 3-237)		
LOG_2: Output 2						052 034
0: No						
LOG_2: Output 2 (t)						052 035
0: No						
LOG_2: Output 3						052 036
0: No						
LOG_2: Output 3 (t)						052 037
0: No						
LOG_2: Output 4						052 038
0: No						
LOG_2: Output 4 (t)						052 039
0: No						

Programmable Logic

Parameter						Address
Default	Min	Max	Unit			Logic Diagram
LOGIC: Input 01 EXT						034 000
0: No						
LOGIC: Input 02 EXT						034 001
0: No						
LOGIC: Input 03 EXT						034 002
0: No						
LOGIC: Input 04 EXT						034 003
0: No						
LOGIC: Input 05 EXT						034 004
0: No						
LOGIC: Input 06 EXT						034 005
0: No						
LOGIC: Input 07 EXT						034 006
0: No						
LOGIC: Input 08 EXT						034 007
0: No						
LOGIC: Input 09 EXT						034 008
0: No						
LOGIC: Input 10 EXT						034 009
0: No						
LOGIC: Input 11 EXT						034 010
0: No						
LOGIC: Input 12 EXT						034 011
0: No						
LOGIC: Input 13 EXT						034 012
0: No						
LOGIC: Input 14 EXT						034 013
0: No						
LOGIC: Input 15 EXT						034 014
0: No						
LOGIC: Input 16 EXT						034 015
0: No						
LOGIC: Input 17 EXT						034 086
0: No						
LOGIC: Input 18 EXT						034 087
0: No						
LOGIC: Input 19 EXT						034 088
0: No						

Parameter						Address
Default	Min	Max	Unit			Logic Diagram
LOGIC: Input 20 EXT						034 089
0: No						
LOGIC: Input 21 EXT						034 090
0: No						
LOGIC: Input 22 EXT						034 091
0: No						
LOGIC: Input 23 EXT						034 092
0: No						
LOGIC: Input 24 EXT						034 093
0: No						
LOGIC: Input 25 EXT						034 094
0: No						
LOGIC: Input 26 EXT						034 095
0: No						
LOGIC: Input 27 EXT						034 096
0: No						
LOGIC: Input 28 EXT						034 097
0: No						
LOGIC: Input 29 EXT						034 098
0: No						
LOGIC: Input 30 EXT						034 099
0: No						
LOGIC: Input 31 EXT						034 100
0: No						
LOGIC: Input 32 EXT						034 101
0: No						
LOGIC: Input 33 EXT						034 102
0: No						
LOGIC: Input 34 EXT						034 103
0: No						
LOGIC: Input 35 EXT						034 104
0: No						
LOGIC: Input 36 EXT						034 105
0: No						
LOGIC: Input 37 EXT						034 106
0: No						
LOGIC: Input 38 EXT						034 107
0: No						

Parameter						Address
Default	Min	Max	Unit		Logic Diagram	
LOGIC: Input 39 EXT						034 108
0: No						
LOGIC: Input 40 EXT						034 109
0: No						
LOGIC: Set 1 EXT						034 051
2: Not configured						
LOGIC: Set 2 EXT						034 052
2: Not configured						
LOGIC: Set 3 EXT						034 053
2: Not configured						
LOGIC: Set 4 EXT						034 054
2: Not configured						
LOGIC: Set 5 EXT						034 055
2: Not configured						
LOGIC: Set 6 EXT						034 056
2: Not configured						
LOGIC: Set 7 EXT						034 057
2: Not configured						
LOGIC: Set 8 EXT						034 058
2: Not configured						
LOGIC: Reset 1 EXT						034 059
2: Not configured						
LOGIC: Reset 2 EXT						034 060
2: Not configured						
LOGIC: Reset 3 EXT						034 061
2: Not configured						
LOGIC: Reset 4 EXT						034 062
2: Not configured						
LOGIC: Reset 5 EXT						034 063
2: Not configured						
LOGIC: Reset 6 EXT						034 064
2: Not configured						
LOGIC: Reset 7 EXT						034 065
2: Not configured						
LOGIC: Reset 8 EXT						034 066
2: Not configured						
LOGIC: 1 has been set						034 067
0: No				Fig. 3-186, (p. 3-235)		

Parameter						Address
Default	Min	Max	Unit			Logic Diagram
LOGIC: 2 has been set						034 068
0: No						
LOGIC: 3 has been set						034 069
0: No						
LOGIC: 4 has been set						034 070
0: No						
LOGIC: 5 has been set						034 071
0: No						
LOGIC: 6 has been set						034 072
0: No						
LOGIC: 7 has been set						034 073
0: No						
LOGIC: 8 has been set						034 074
0: No						
LOGIC: 1 set externally						034 075
0: No				Fig. 3-186, (p. 3-235)		
LOGIC: 2 set externally						034 076
0: No						
LOGIC: 3 set externally						034 077
0: No						
LOGIC: 4 set externally						034 078
0: No						
LOGIC: 5 set externally						034 079
0: No						
LOGIC: 6 set externally						034 080
0: No						
LOGIC: 7 set externally						034 081
0: No						
LOGIC: 8 set externally						034 082
0: No						
LOGIC: Enabled						034 046
0: No				Fig. 3-187, (p. 3-236)		
LOGIC: Output 01						042 032
0: No				Fig. 3-187, (p. 3-236)		
LOGIC: Output 01 (t)						042 033
0: No				Fig. 3-187, (p. 3-236)		
LOGIC: Output 02						042 034
0: No						

Parameter						Address
Default	Min	Max	Unit		Logic Diagram	
LOGIC: Output 02 (t)						042 035
0: No						
LOGIC: Output 03						042 036
0: No						
LOGIC: Output 03 (t)						042 037
0: No						
LOGIC: Output 04						042 038
0: No						
LOGIC: Output 04 (t)						042 039
0: No						
LOGIC: Output 05						042 040
0: No						
LOGIC: Output 05 (t)						042 041
0: No						
LOGIC: Output 06						042 042
0: No						
LOGIC: Output 06 (t)						042 043
0: No						
LOGIC: Output 07						042 044
0: No						
LOGIC: Output 07 (t)						042 045
0: No						
LOGIC: Output 08						042 046
0: No						
LOGIC: Output 08 (t)						042 047
0: No						
LOGIC: Output 09						042 048
0: No						
LOGIC: Output 09 (t)						042 049
0: No						
LOGIC: Output 10						042 050
0: No						
LOGIC: Output 10 (t)						042 051
0: No						
LOGIC: Output 11						042 052
0: No						
LOGIC: Output 11 (t)						042 053
0: No						

Parameter						Address
Default	Min	Max	Unit			Logic Diagram
LOGIC: Output 12						042 054
0: No						
LOGIC: Output 12 (t)						042 055
0: No						
LOGIC: Output 13						042 056
0: No						
LOGIC: Output 13 (t)						042 057
0: No						
LOGIC: Output 14						042 058
0: No						
LOGIC: Output 14 (t)						042 059
0: No						
LOGIC: Output 15						042 060
0: No						
LOGIC: Output 15 (t)						042 061
0: No						
LOGIC: Output 16						042 062
0: No						
LOGIC: Output 16 (t)						042 063
0: No						
LOGIC: Output 17						042 064
0: No						
LOGIC: Output 17 (t)						042 065
0: No						
LOGIC: Output 18						042 066
0: No						
LOGIC: Output 18 (t)						042 067
0: No						
LOGIC: Output 19						042 068
0: No						
LOGIC: Output 19 (t)						042 069
0: No						
LOGIC: Output 20						042 070
0: No						
LOGIC: Output 20 (t)						042 071
0: No						
LOGIC: Output 21						042 072
0: No						

Parameter						Address
Default	Min	Max	Unit		Logic Diagram	
LOGIC: Output 21 (t)						042 073
0: No						
LOGIC: Output 22						042 074
0: No						
LOGIC: Output 22 (t)						042 075
0: No						
LOGIC: Output 23						042 076
0: No						
LOGIC: Output 23 (t)						042 077
0: No						
LOGIC: Output 24						042 078
0: No						
LOGIC: Output 24 (t)						042 079
0: No						
LOGIC: Output 25						042 080
0: No						
LOGIC: Output 25 (t)						042 081
0: No						
LOGIC: Output 26						042 082
0: No						
LOGIC: Output 26 (t)						042 083
0: No						
LOGIC: Output 27						042 084
0: No						
LOGIC: Output 27 (t)						042 085
0: No						
LOGIC: Output 28						042 086
0: No						
LOGIC: Output 28 (t)						042 087
0: No						
LOGIC: Output 29						042 088
0: No						
LOGIC: Output 29 (t)						042 089
0: No						
LOGIC: Output 30						042 090
0: No						
LOGIC: Output 30 (t)						042 091
0: No						

Parameter						Address
Default	Min	Max	Unit			Logic Diagram
LOGIC: Output 31						042 092
0: No						
LOGIC: Output 31 (t)						042 093
0: No						
LOGIC: Output 32						042 094
0: No						
LOGIC: Output 32 (t)						042 095
0: No						
LOGIC: Output 33						042 180
0: No						
LOGIC: Output 33 (t)						042 181
0: No						
LOGIC: Output 34						042 182
0: No						
LOGIC: Output 34 (t)						042 183
0: No						
LOGIC: Output 35						042 184
0: No						
LOGIC: Output 35 (t)						042 185
0: No						
LOGIC: Output 36						042 186
0: No						
LOGIC: Output 36 (t)						042 187
0: No						
LOGIC: Output 37						042 188
0: No						
LOGIC: Output 37 (t)						042 189
0: No						
LOGIC: Output 38						042 190
0: No						
LOGIC: Output 38 (t)						042 191
0: No						
LOGIC: Output 39						042 192
0: No						
LOGIC: Output 39 (t)						042 193
0: No						
LOGIC: Output 40						042 194
0: No						

Parameter						Address
Default	Min	Max	Unit		Logic Diagram	
LOGIC: Output 40 (t)						042 195
0: No						
LOGIC: Output 41						042 196
0: No						
LOGIC: Output 41 (t)						042 197
0: No						
LOGIC: Output 42						042 198
0: No						
LOGIC: Output 42 (t)						042 199
0: No						
LOGIC: Output 43						042 200
0: No						
LOGIC: Output 43 (t)						042 201
0: No						
LOGIC: Output 44						042 202
0: No						
LOGIC: Output 44 (t)						042 203
0: No						
LOGIC: Output 45						042 204
0: No						
LOGIC: Output 45 (t)						042 205
0: No						
LOGIC: Output 46						042 206
0: No						
LOGIC: Output 46 (t)						042 207
0: No						
LOGIC: Output 47						042 208
0: No						
LOGIC: Output 47 (t)						042 209
0: No						
LOGIC: Output 48						042 210
0: No						
LOGIC: Output 48 (t)						042 211
0: No						
LOGIC: Output 49						042 212
0: No						
LOGIC: Output 49 (t)						042 213
0: No						

Parameter						Address
Default	Min	Max	Unit			Logic Diagram
LOGIC: Output 50						042 214
0: No						
LOGIC: Output 50 (t)						042 215
0: No						
LOGIC: Output 51						042 216
0: No						
LOGIC: Output 51 (t)						042 217
0: No						
LOGIC: Output 52						042 218
0: No						
LOGIC: Output 52 (t)						042 219
0: No						
LOGIC: Output 53						042 220
0: No						
LOGIC: Output 53 (t)						042 221
0: No						
LOGIC: Output 54						042 222
0: No						
LOGIC: Output 54 (t)						042 223
0: No						
LOGIC: Output 55						042 224
0: No						
LOGIC: Output 55 (t)						042 225
0: No						
LOGIC: Output 56						042 226
0: No						
LOGIC: Output 56 (t)						042 227
0: No						
LOGIC: Output 57						042 228
0: No						
LOGIC: Output 57 (t)						042 229
0: No						
LOGIC: Output 58						042 230
0: No						
LOGIC: Output 58 (t)						042 231
0: No						
LOGIC: Output 59						042 232
0: No						

Parameter						Address
Default	Min	Max	Unit		Logic Diagram	
LOGIC: Output 59 (t)						042 233
0: No						
LOGIC: Output 60						042 234
0: No						
LOGIC: Output 60 (t)						042 235
0: No						
LOGIC: Output 61						042 236
0: No						
LOGIC: Output 61 (t)						042 237
0: No						
LOGIC: Output 62						042 238
0: No						
LOGIC: Output 62 (t)						042 239
0: No						
LOGIC: Output 63						042 240
0: No						
LOGIC: Output 63 (t)						042 241
0: No						
LOGIC: Output 64						042 242
0: No						
LOGIC: Output 64 (t)						042 243
0: No						
LOGIC: Output 65						047 128
0: No						
LOGIC: Output 65 (t)						047 129
0: No						
LOGIC: Output 66						047 002
0: No						
LOGIC: Output 66 (t)						047 003
0: No						
LOGIC: Output 67						047 004
0: No						
LOGIC: Output 67 (t)						047 005
0: No						
LOGIC: Output 68						047 006
0: No						
LOGIC: Output 68 (t)						047 007
0: No						

Parameter						Address
Default	Min	Max	Unit			Logic Diagram
LOGIC: Output 69						047 008
0: No						
LOGIC: Output 69 (t)						047 009
0: No						
LOGIC: Output 70						047 010
0: No						
LOGIC: Output 70 (t)						047 011
0: No						
LOGIC: Output 71						047 012
0: No						
LOGIC: Output 71 (t)						047 013
0: No						
LOGIC: Output 72						047 014
0: No						
LOGIC: Output 72 (t)						047 015
0: No						
LOGIC: Output 73						047 016
0: No						
LOGIC: Output 73 (t)						047 017
0: No						
LOGIC: Output 74						047 018
0: No						
LOGIC: Output 74 (t)						047 019
0: No						
LOGIC: Output 75						047 020
0: No						
LOGIC: Output 75 (t)						047 021
0: No						
LOGIC: Output 76						047 022
0: No						
LOGIC: Output 76 (t)						047 023
0: No						
LOGIC: Output 77						047 024
0: No						
LOGIC: Output 77 (t)						047 025
0: No						
LOGIC: Output 78						047 026
0: No						

Parameter						Address
Default	Min	Max	Unit		Logic Diagram	
LOGIC: Output 78 (t)						047 027
0: No						
LOGIC: Output 79						047 028
0: No						
LOGIC: Output 79 (t)						047 029
0: No						
LOGIC: Output 80						047 030
0: No						
LOGIC: Output 80 (t)						047 031
0: No						
LOGIC: Output 81						047 032
0: No						
LOGIC: Output 81 (t)						047 033
0: No						
LOGIC: Output 82						047 034
0: No						
LOGIC: Output 82 (t)						047 035
0: No						
LOGIC: Output 83						047 036
0: No						
LOGIC: Output 83 (t)						047 037
0: No						
LOGIC: Output 84						047 038
0: No						
LOGIC: Output 84 (t)						047 039
0: No						
LOGIC: Output 85						047 040
0: No						
LOGIC: Output 85 (t)						047 041
0: No						
LOGIC: Output 86						047 042
0: No						
LOGIC: Output 86 (t)						047 043
0: No						
LOGIC: Output 87						047 044
0: No						
LOGIC: Output 87 (t)						047 045
0: No						

Parameter						Address
Default	Min	Max	Unit			Logic Diagram
LOGIC: Output 88						047 046
0: No						
LOGIC: Output 88 (t)						047 047
0: No						
LOGIC: Output 89						047 048
0: No						
LOGIC: Output 89 (t)						047 049
0: No						
LOGIC: Output 90						047 050
0: No						
LOGIC: Output 90 (t)						047 051
0: No						
LOGIC: Output 91						047 052
0: No						
LOGIC: Output 91 (t)						047 053
0: No						
LOGIC: Output 92						047 054
0: No						
LOGIC: Output 92 (t)						047 055
0: No						
LOGIC: Output 93						047 056
0: No						
LOGIC: Output 93 (t)						047 057
0: No						
LOGIC: Output 94						047 058
0: No						
LOGIC: Output 94 (t)						047 059
0: No						
LOGIC: Output 95						047 060
0: No						
LOGIC: Output 95 (t)						047 061
0: No						
LOGIC: Output 96						047 062
0: No						
LOGIC: Output 96 (t)						047 063
0: No						
LOGIC: Output 97						047 064
0: No						

Parameter						Address
Default	Min	Max	Unit		Logic Diagram	
LOGIC: Output 97 (t)						047 065
0: No						
LOGIC: Output 98						047 066
0: No						
LOGIC: Output 98 (t)						047 067
0: No						
LOGIC: Output 99						047 068
0: No						
LOGIC: Output 99 (t)						047 069
0: No						
LOGIC: Output100						047 070
0: No						
LOGIC: Output100 (t)						047 071
0: No						
LOGIC: Output101						047 072
0: No						
LOGIC: Output101 (t)						047 073
0: No						
LOGIC: Output102						047 074
0: No						
LOGIC: Output102 (t)						047 075
0: No						
LOGIC: Output103						047 076
0: No						
LOGIC: Output103 (t)						047 077
0: No						
LOGIC: Output104						047 078
0: No						
LOGIC: Output104 (t)						047 079
0: No						
LOGIC: Output105						047 080
0: No						
LOGIC: Output105 (t)						047 081
0: No						
LOGIC: Output106						047 082
0: No						
LOGIC: Output106 (t)						047 083
0: No						

Parameter						Address
Default	Min	Max	Unit			Logic Diagram
LOGIC: Output107						047 084
0: No						
LOGIC: Output107 (t)						047 085
0: No						
LOGIC: Output108						047 086
0: No						
LOGIC: Output108 (t)						047 087
0: No						
LOGIC: Output109						047 088
0: No						
LOGIC: Output109 (t)						047 089
0: No						
LOGIC: Output110						047 090
0: No						
LOGIC: Output110 (t)						047 091
0: No						
LOGIC: Output111						047 092
0: No						
LOGIC: Output111 (t)						047 093
0: No						
LOGIC: Output112						047 094
0: No						
LOGIC: Output112 (t)						047 095
0: No						
LOGIC: Output113						047 096
0: No						
LOGIC: Output113 (t)						047 097
0: No						
LOGIC: Output114						047 098
0: No						
LOGIC: Output114 (t)						047 099
0: No						
LOGIC: Output115						047 100
0: No						
LOGIC: Output115 (t)						047 101
0: No						
LOGIC: Output116						047 102
0: No						

Parameter						Address
Default	Min	Max	Unit		Logic	Diagram
LOGIC: Output116 (t)						047 103
0: No						
LOGIC: Output117						047 104
0: No						
LOGIC: Output117 (t)						047 105
0: No						
LOGIC: Output118						047 106
0: No						
LOGIC: Output118 (t)						047 107
0: No						
LOGIC: Output119						047 108
0: No						
LOGIC: Output119 (t)						047 109
0: No						
LOGIC: Output120						047 110
0: No						
LOGIC: Output120 (t)						047 111
0: No						
LOGIC: Output121						047 112
0: No						
LOGIC: Output121 (t)						047 113
0: No						
LOGIC: Output122						047 114
0: No						
LOGIC: Output122 (t)						047 115
0: No						
LOGIC: Output123						047 116
0: No						
LOGIC: Output123 (t)						047 117
0: No						
LOGIC: Output124						047 118
0: No						
LOGIC: Output124 (t)						047 119
0: No						
LOGIC: Output125						047 120
0: No						
LOGIC: Output125 (t)						047 121
0: No						

Parameter						Address
Default	Min	Max	Unit			Logic Diagram
LOGIC: Output126						047 122
0: No						
LOGIC: Output126 (t)						047 123
0: No						
LOGIC: Output127						047 124
0: No						
LOGIC: Output127 (t)						047 125
0: No						
LOGIC: Output128						047 126
0: No						
LOGIC: Output128 (t)						047 127
0: No						

External device

Parameter						Address
Default	Min	Max	Unit		Logic Diagram	
DEV01: Open signal EXT						210 030
0: No						
DEV01: Closed signal EXT						210 031
0: No						
DEV01: Control state						210 018
0: Intermediate pos.				Fig. 3-199, (p. 3-248) Fig. 3-205, (p. 3-258)		
DEV01: Switch. device open						210 036
0: No				Fig. 3-199, (p. 3-248) Fig. 3-205, (p. 3-258)		
DEV01: Switch.device closed						210 037
0: No				Fig. 3-199, (p. 3-248) Fig. 3-205, (p. 3-258)		
DEV01: Dev. interm./flt.pos						210 038
0: No				Fig. 3-199, (p. 3-248) Fig. 3-205, (p. 3-258)		
DEV01: Open command						210 028
0: No				Fig. 3-204, (p. 3-255)		
DEV01: Close command						210 029
0: No				Fig. 3-204, (p. 3-255)		
DEV01: Open cmd. received						218 000
0: No				Fig. 3-200, (p. 3-250)		
DEV01: Close cmd. received						218 001
0: No				Fig. 3-200, (p. 3-250)		
DEV01: Warning op.count.						219 081
0: No						
DEV02: Warning op.count.						219 082
0: No						
DEV03: Warning op.count.						219 083
0: No						
Warning that the number of switching commands has exceeded the set limit value.						

External device

Parameter					Address
Default	Min	Max	Unit		Logic Diagram
DEV02: Open signal EXT					210 080
0: No					
DEV02: Closed signal EXT					210 081
0: No					
DEV02: Control state					210 068
0: Intermediate pos.					
DEV02: Switch. device open					210 086
0: No					
DEV02: Switch.device closed					210 087
0: No					
DEV02: Dev. interm./flt.pos					210 088
0: No					
DEV02: Open command					210 078
0: No					
DEV02: Close command					210 079
0: No					
DEV02: Open cmd. received					218 002
0: No					
DEV02: Close cmd. received					218 003
0: No					

External device

Parameter						Address
Default	Min	Max	Unit			Logic Diagram
DEV03: Open signal EXT						210 130
0: No						
DEV03: Closed signal EXT						210 131
0: No						
DEV03: Control state						210 118
0: Intermediate pos.						
DEV03: Switch. device open						210 136
0: No						
DEV03: Switch.device closed						210 137
0: No						
DEV03: Dev. interm./flt.pos						210 138
0: No						
DEV03: Open command						210 128
0: No						
DEV03: Close command						210 129
0: No						
DEV03: Open cmd. received						218 004
0: No						
DEV03: Close cmd. received						218 005
0: No						

Single-pole signals

Parameter						Address
Default	Min	Max	Unit			Logic Diagram
SIG_1: Signal S001 EXT						226 004
0: No						
SIG_1: Logic signal S001						226 005
0: No				Fig. 3-210, (p. 3-267)		
SIG_1: Signal S002 EXT						226 012
0: No						
SIG_1: Logic signal S002						226 013
0: No						
SIG_1: Signal S003 EXT						226 020
0: No						
SIG_1: Logic signal S003						226 021
0: No						
SIG_1: Signal S004 EXT						226 028
0: No						
SIG_1: Logic signal S004						226 029
0: No						
SIG_1: Signal S005 EXT						226 036
0: No						
SIG_1: Logic signal S005						226 037
0: No						
SIG_1: Signal S006 EXT						226 044
0: No						
SIG_1: Logic signal S006						226 045
0: No						
SIG_1: Signal S007 EXT						226 052
0: No						
SIG_1: Logic signal S007						226 053
0: No						
SIG_1: Signal S008 EXT						226 060
0: No						
SIG_1: Logic signal S008						226 061
0: No						
SIG_1: Signal S009 EXT						226 068
0: No						
SIG_1: Logic signal S009						226 069
0: No						
SIG_1: Signal S010 EXT						226 076
0: No						

Parameter						Address
Default	Min	Max	Unit		Logic	Diagram
SIG_1: Logic signal S010						226 077
0: No						
SIG_1: Signal S011 EXT						226 084
0: No						
SIG_1: Logic signal S011						226 085
0: No						
SIG_1: Signal S012 EXT						226 092
0: No						
SIG_1: Logic signal S012						226 093
0: No						
SIG_1: SIG_DC3 EXT						233 004
0: No						
SIG_1: Logic SIG_DC3						233 005
0: No						

Single-pole commands

Parameter						Address
Default	Min	Max	Unit			Logic Diagram
CMD_1: Command C001						200 001
0: No				Fig. 3-209, (p. 3-265)		
CMD_1: Command C002						200 006
0: No						
CMD_1: Command C003						200 011
0: No						
CMD_1: Command C004						200 016
0: No						
CMD_1: Command C005						200 021
0: No						
CMD_1: Command C006						200 026
0: No						
CMD_1: Command C007						200 031
0: No						
CMD_1: Command C008						200 036
0: No						
CMD_1: Command C009						200 041
0: No						
CMD_1: Command C010						200 046
0: No						
CMD_1: Command C011						200 051
0: No						
CMD_1: Command C012						200 056
0: No						
CMD_1: CMD_DC3						202 011
0: No						

Interlocking logic

Parameter							Address
Default	Min	Max	Unit			Logic Diagram	
ILOCK: Output 1							250 032
0: No				Fig. 3-208, (p. 3-263)			
ILOCK: Output 2							250 033
0: No							
ILOCK: Output 3							250 034
0: No							
ILOCK: Output 4							250 035
0: No							
ILOCK: Output 5							250 036
0: No							
ILOCK: Output 6							250 037
0: No							
ILOCK: Output 7							250 038
0: No							
ILOCK: Output 8							250 039
0: No							
ILOCK: Output 9							250 040
0: No							
ILOCK: Output 10							250 041
0: No							
ILOCK: Output 11							250 042
0: No							
ILOCK: Output 12							250 043
0: No							
ILOCK: Output 13							250 044
0: No							
ILOCK: Output 14							250 045
0: No							
ILOCK: Output 15							250 046
0: No							
ILOCK: Output 16							250 047
0: No							
ILOCK: Output 17							250 048
0: No							
ILOCK: Output 18							250 049
0: No							
ILOCK: Output 19							250 050
0: No							

Parameter						Address
Default	Min	Max	Unit			Logic Diagram
ILOCK: Output 20						250 051
0: No						
ILOCK: Output 21						250 052
0: No						
ILOCK: Output 22						250 053
0: No						
ILOCK: Output 23						250 054
0: No						
ILOCK: Output 24						250 055
0: No						
ILOCK: Output 25						250 056
0: No						
ILOCK: Output 26						250 057
0: No						
ILOCK: Output 27						250 058
0: No						
ILOCK: Output 28						250 059
0: No						
ILOCK: Output 29						250 060
0: No						
ILOCK: Output 30						250 061
0: No						
ILOCK: Output 31						250 062
0: No						
ILOCK: Output 32						250 063
0: No						

Output of the respective equation of the interlocking logic.

These logic state signals are transmitted with the request for a switching operation, and cyclically (according to the setting **ILOCK: Cycle t interl.check**).

Binary counts

Parameter					Address
Default	Min	Max	Unit		Logic Diagram
COUNT: Set counter 1 EXT					217 130
0: No					
COUNT: Set counter 2 EXT					217 085
0: No					
COUNT: Set counter 3 EXT					217 086
0: No					
COUNT: Set counter 4 EXT					217 087
0: No					
COUNT: Transmit counts EXT					217 009
0: No					
COUNT: Reset EXT					217 004
0: No					
COUNT: Enabled					217 001
0: No				Fig. 3-215, (p. 3-273)	
COUNT: Transmit counts					217 010
0: No				Fig. 3-215, (p. 3-273)	
COUNT: Reset					217 005
0: No				Fig. 3-215, (p. 3-273)	
COUNT: Warning count 1					217 191
0: No					
COUNT: Warning count 2					217 192
0: No					
COUNT: Warning count 3					217 193
0: No					
COUNT: Warning count 4					217 194
0: No					
Warning that the counter value has exceeded the set limit value.					

8.1.2 Control and Testing

Local control panel

Parameter					Address
Default	Min	Max	Unit		Logic Diagram
LOC: Param. change enabl.					003 010
0: No					
Setting the enable for changing values from the local control panel.					

“Logical” communication interface 1

Parameter					Address
Default	Min	Max	Unit		Logic Diagram
COMM1: Sel.spontan.sig.test					003 180
060 000: MAIN: Without function				Fig. 3-17, (p. 3-23)	
Signal selection for testing purposes.					
COMM1: Test spont.sig.start					003 184
0: don't execute				Fig. 3-17, (p. 3-23)	
Triggering of transmission of a selected signal as “starting”.					
COMM1: Test spont.sig. end					003 186
0: don't execute				Fig. 3-17, (p. 3-23)	
Triggering of transmission of a selected signal as “ending”.					
COMM1: Sel. pos. dev.test					221 105
0: Not assigned					
Select a device DEVxx for testing the transmission of switchgear device position in monitoring direction.					
COMM1: Test position dev.					221 106
0: don't execute					
Carry out a test to check the transmission of switchgear device position in monitoring direction for the device selected at **COMM1: Sel. pos. dev.test**.					

“Logical” communication interface 2

Parameter					Address
Default	Min	Max	Unit		Logic Diagram
COMM2: Sel.spontan.sig.test					103 180
060 000: MAIN: Without function				Fig. 3-19, (p. 3-25)	
Signal selection for testing purposes.					
COMM2: Test spont.sig.start					103 184
0: don't execute				Fig. 3-19, (p. 3-25)	
Triggering of transmission of a selected signal as "starting".					
COMM2: Test spont.sig. end					103 186
0: don't execute				Fig. 3-19, (p. 3-25)	
Triggering of transmission of a selected signal as "ending".					

IEC 61850 Communication

Parameter						Address
Default	**Min**	**Max**	**Unit**		**Logic Diagram**	
IEC: Sel.spontan.sig.test						104 245
060 000: MAIN: Without function				Fig. 3-26, (p. 3-47)		
IEC: Test spont.sig.start						104 246
0: don't execute				Fig. 3-26, (p. 3-47)		
IEC: Test spont.sig. end						104 247
0: don't execute				Fig. 3-26, (p. 3-47)		
IEC: Sel. pos. DEV test						104 248
0: Not assigned						
IEC: Test position DEV						104 249
0: don't execute						

Measured data input

Parameter						Address
Default	**Min**	**Max**	**Unit**		**Logic Diagram**	
MEASI: Reset Tmax USER						003 045
0: don't execute						
Resetting measured maximum temperatures Tmax and Tmax Tx (x=1...9) to updated measured values.						

Binary and analog output

Parameter						Address
Default	**Min**	**Max**	**Unit**		**Logic Diagram**	
OUTP: Reset latch. USER						021 009
0: don't execute				Fig. 3-38, (p. 3-63)		
Reset of latched output relays from the user interface.						
OUTP: Relay assign. f.test						003 042
060 000: MAIN: Without function				Fig. 3-39, (p. 3-64)		
Selection of the relay to be tested.						
OUTP: Relay test						003 043
0: don't execute				Fig. 3-39, (p. 3-64)		
The relay selected for testing is triggered for the duration set at **OUTP: Hold-time for test**.						
OUTP: Hold-time for test						003 044
1	1	10	s	Fig. 3-39, (p. 3-64)		
Setting for the time period for which the selected output relay is triggered for functional testing.						

Measured data output

Parameter						Address
Default	Min	Max	Unit			Logic Diagram
MEASO: Reset output USER						037 116
0: don't execute				Fig. 3-42, (p. 3-66)		
Resetting the measured data output function.						

Main function

Parameter						Address
Default	Min	Max	Unit		Logic Diagram	
MAIN: General reset USER						003 002
0: don't execute				Fig. 3-78, (p. 3-114)		
Reset of the following memories: ● All counters ● LED indicators ● Operating data memory ● All event memories ● Event counters ● Fault data ● Measured overload data ● Recorded fault values						
MAIN: Reset indicat. USER						021 010
0: No				Fig. 3-78, (p. 3-114)		
Reset of the following displays: ● LED indicators ● Fault data						
MAIN: Rset.latch.trip USER						021 005
0: don't execute				Fig. 3-74, (p. 3-110)		
Reset of latched trip commands from the local control panel.						
MAIN: Reset c. cl/tr.cUSER						003 007
0: don't execute				Fig. 3-75, (p. 3-111)		
The counters for counting the close and trip commands are reset.						
MAIN: Reset IP,max,st.USER						003 033
0: don't execute				Fig. 3-55, (p. 3-92)		
The values for the delayed stored maximum phase current are reset (for all ends).						
MAIN: Group reset 1 USER						005 253
0: don't execute				Fig. 3-79, (p. 3-114)		
MAIN: Group reset 2 USER						005 254
0: don't execute				Fig. 3-79, (p. 3-114)		
Group of resetting commands.						
MAIN: Man. trip cmd. USER						003 040
0: don't execute				Fig. 3-74, (p. 3-110)		
A 100 ms trip command is issued from the local control panel. **Note:** The command is only executed if the manual trip command has been configured as trip command 1 or 2.						

Parameter					Address
Default	Min	Max	Unit		Logic Diagram
MAIN: Soft Warm restart					003 039
0: don't execute					
A warm restart of the software is carried out. The device functions as it does when the power supply is turned on, except that no hardware tests are carried out.					
MAIN: Warm restart					010 166
0: don't execute					
A warm restart is carried out. The device functions as it does when the power supply is turned on.					
MAIN: Soft Cold restart					000 085
0: don't execute					
A cold restart of the software is carried out. This means that all settings and recordings are cleared, but no tests of the hardware are carried out during the restart. Parameter values used by the P633 after a cold restart have been selected in such a manner that the P633 is blocked after a cold restart.					
MAIN: Cold restart					009 254
0: don't execute					
A cold restart is carried out. A cold restart means that all settings and recordings are cleared. Parameter values used by the P633 after a cold restart have been selected in such a manner that the P633 is blocked after a cold restart.					

Operating data recording

Parameter					Address
Default	Min	Max	Unit		Logic Diagram
OP_RC: Reset record. USER					100 001
0: don't execute				Fig. 3-84, (p. 3-122)	
The operating data memory and the counter for operation signals are reset.					

Monitoring signal recording

Parameter					Address
Default	Min	Max	Unit		Logic Diagram
MT_RC: Reset record. USER					003 008
0: don't execute				Fig. 3-85, (p. 3-123)	
Reset of the monitoring signal memory.					

Overload recording

Parameter					Address
Default	Min	Max	Unit		Logic Diagram
OL_RC: Reset record. USER					100 003
0: don't execute				Fig. 3-89, (p. 3-127)	
Reset of the overload memory.					

Fault recording

Parameter					Address
Default	Min	Max	Unit		Logic Diagram
FT_RC: Trigger USER					003 041
0: don't execute				Fig. 3-95, (p. 3-136)	
Fault recording is enabled from the local control panel for 500 ms.					
FT_RC: Reset record. USER					003 006
0: don't execute				Fig. 3-96, (p. 3-137)	
Reset of the following memories: ● LED indicators ● Fault memory ● Fault counter ● Fault data ● Recorded fault values					

Thermal overload protection

Parameter					Address
Default	Min	Max	Unit		Logic Diagram
THRM1: Reset replica USER					039 120
0: don't execute				Fig. 3-145, (p. 3-196)	
Reset of the thermal replica of the thermal overload protection 1.					

Thermal overload protection

Parameter					Address
Default	Min	Max	Unit		Logic Diagram
THRM2: Reset replica USER					039 180
0: don't execute					
Resetting the thermal replica of the thermal overload protection function.					

Over-/ underfrequency protection

Parameter					Address
Default	Min	Max	Unit		Logic Diagram
f<>: Reset meas.val. USER					003 080
0: don't execute					

Resetting the measured event values **f<>: Max. frequ. for f>** and **f<>: Min. frequ. for f<**.

Overfluxing protection

Parameter					Address
Default	Min	Max	Unit		Logic Diagram
V/f: Reset replica USER					035 183
0: don't execute				Fig. 3-160, (p. 3-210)	

Current transformer supervision

Parameter					Address
Default	Min	Max	Unit		Logic Diagram
CTS: Reset latch. USER					036 157
0: don't execute				Fig. 3-166, (p. 3-215)	

Circuit breaker failure protection

Parameter					Address
Default	Min	Max	Unit		Logic Diagram
CBF_1: Enable USER					003 016
0: don't execute				Fig. 3-171, (p. 3-220)	

Circuit breaker failure protection is enabled from the local control panel.

CBF_1: Disable USER					003 015
0: don't execute				Fig. 3-171, (p. 3-220)	

Circuit breaker failure protection is disabled from the local control panel.

Circuit breaker failure protection

Parameter					Address
Default	Min	Max	Unit		Logic Diagram
CBF_2: Enable USER					003 124
0: don't execute					
CBF_2: Disable USER					003 123
0: don't execute					

Circuit breaker failure protection

Parameter						Address
Default	Min	Max	Unit		Logic	Diagram
CBF_3: Enable USER						003 126
0: don't execute						
CBF_3: Disable USER						003 125
0: don't execute						

Programmable Logic

Parameter						Address
Default	Min	Max	Unit		Logic	Diagram
LOGIC: Trigger 1						034 038
0: No				Fig. 3-187, (p. 3-236)		
LOGIC: Trigger 2						034 039
0: No						
LOGIC: Trigger 3						034 040
0: No						
LOGIC: Trigger 4						034 041
0: No						
LOGIC: Trigger 5						034 042
0: No						
LOGIC: Trigger 6						034 043
0: No						
LOGIC: Trigger 7						034 044
0: No						
LOGIC: Trigger 8						034 045
0: No				Fig. 3-187, (p. 3-236)		
Intervention in the logic at the appropriate point by a 100 ms pulse.						

Binary counts

Parameter						Address
Default	Min	Max	Unit		Logic	Diagram
COUNT: Transmit counts USER						217 008
0: don't execute				Fig. 3-215, (p. 3-273)		
Count transmission.						
COUNT: Reset USER						217 003
0: don't execute				Fig. 3-215, (p. 3-273)		
Count reset.						

8.1.3 Operating Data Recording

Operating data recording

Parameter							Address
Default	Min	Max	Unit				Logic Diagram
OP_RC: Operat. data record.							003 024
0	0	1000		Fig. 3-84, (p. 3-122)			
Point of entry into the operating data log.							

Monitoring signal recording

Parameter							Address
Default	Min	Max	Unit				Logic Diagram
MT_RC: Mon. signal record.							003 001
0	0	30		Fig. 3-85, (p. 3-123)			
Point of entry into the monitoring signal log.							

8.2 Events

8.2.1 Event Counters

Main function

Parameter						Address
Default	Min	Max	Unit		Logic Diagram	
MAIN: No. general start.						004 000
0: don't execute				Fig. 3-73, (p. 3-109)		
Number of general starting signals.						
MAIN: CB1 act. oper. cap.						221 087
1	1	99				
Setting for the maximum number of CB operations for an ARC cycle (or for a limited time period).						
MAIN: No. gen.trip cmds. 1						004 006
0: don't execute				Fig. 3-75, (p. 3-111)		
Number of general trip commands 1.						
MAIN: No. gen.trip cmds. 2						009 050
0: don't execute				Fig. 3-75, (p. 3-111)		
Number of general trip commands 2.						
MAIN: No. gen.trip cmds. 3						009 056
0: don't execute				Fig. 3-75, (p. 3-111)		
Number of general trip commands 3.						
MAIN: No. gen.trip cmds. 4						009 057
0: don't execute				Fig. 3-75, (p. 3-111)		
Number of general trip commands 4.						
MAIN: No. motor drive op.						221 025
0: don't execute						
Number of times external devices with direct motor control are activated during the monitoring time.						

Operating data recording

Parameter						Address
Default	Min	Max	Unit		Logic Diagram	
OP_RC: No. oper. data sig.						100 002
0	0	1000		Fig. 3-84, (p. 3-122)		
Number of signals stored in the operating data memory.						

Monitoring signal recording

Parameter							Address
Default	Min	Max	Unit				Logic Diagram
MT_RC: No. monit. signals							004 019
0	0	30		Fig. 3-85, (p. 3-123)			
Number of signals stored in the monitoring signal memory.							

Overload recording

Parameter							Address
Default	Min	Max	Unit				Logic Diagram
OL_RC: No. overload							004 101
0	0	9999		Fig. 3-88, (p. 3-126)			
Number of overload events.							

Fault recording

Parameter							Address
Default	Min	Max	Unit				Logic Diagram
FT_RC: No. of faults							004 020
0	0	9999		Fig. 3-95, (p. 3-136)			
Number of faults.							
FT_RC: No. system disturb.							004 010
0	0	9999		Fig. 3-95, (p. 3-136)			
Number of system disturbances.							

Definite-time over-current protection

Parameter						Address
Default	Min	Max	Unit		Logic Diagram	
DTOC1: No. general start.						009 150
0: don't execute				Fig. 3-125, (p. 3-175)		
DTOC2: No. general start.						009 160
0: don't execute						
DTOC3: No. general start.						009 170
0: don't execute						
IDMT1: No. general start.						009 151
0: don't execute				Fig. 3-137, (p. 3-188)		
IDMT2: No. general start.						009 161
0: don't execute						
IDMT3: No. general start.						009 171
0: don't execute						
Number of general starting signals.						

External device

Parameter						Address
Default	Min	Max	Unit		Logic Diagram	
DEV01: Operation counter						210 043
0	0	65535				
DEV02: Operation counter						210 093
0	0	65535				
DEV03: Operation counter						210 143
0	0	65535				
Number of switching operations made. It is also possible to manually set this counter to any value from 0 to 65535.						
DEV01: Dev. op. capability						210 003
1	1	99				
DEV02: Dev. op. capability						210 053
1	1	99				
DEV03: Dev. op. capability						210 103
1	1	99				
Number of remaining switching operations. It is also possible to manually set this counter to any value from 1 to 99.						

8.2.2 Measured Event Data

Overload data acquisition

Parameter					Address
Default	**Min**	**Max**	**Unit**		**Logic Diagram**
OL_DA: Overload duration					004 102
Not measured	0.0	6500.0	s	Fig. 3-86, (p. 3-124)	
Duration of the overload event.					
OL_DA: Status THRM1 replica					004 155
Not measured	0	250	%	Fig. 3-87, (p. 3-125)	
Display of the buffer content of the thermal overload protection function THRM1 or THRM2, respectively.					
OL_DA: Load current THRM1					004 159
Not measured	0.00	3.00	Inom	Fig. 3-87, (p. 3-125)	
Display of the load current used by the thermal overload protection function to calculate the tripping time.					
OL_DA: Object temp. THRM1					004 156
Not measured	-40	300	°C	Fig. 3-87, (p. 3-125)	
Display of the temperature of the protected object as determined by function THRM1 or THRM2, respectively.					
OL_DA: Coolant temp.THRM1					004 157
Not measured	-40	215	°C	Fig. 3-87, (p. 3-125)	
OL_DA: Coolant temp.THRM2					004 187
Not measured	-40	215	°C		
Display of the coolant temperature of the protected object. Depending on the setting at **THRM1: Select CTA PSx** or **THRM2: Select CTA PSx** for coolant temperature acquisition, one of the following values will be displayed: ● Setting *Default temp. value*: Display of the set temperature value. ● Setting *From PT100*: Display of the temperature measured by the resistance thermometer. ● Setting *From 20 mA input*: Display of the temperature measured via the 20 mA input.					
OL_DA: Pre-trip t.leftTHRM1					004 158
Not measured	0.0	1000.0	min	Fig. 3-87, (p. 3-125)	
Display of the time remaining before the thermal overload protection function THRM1 or THRM2, respectively, will reach the tripping threshold.					
OL_DA: Offset THRM1 replica					004 191
Not measured	-25000	25000	%	Fig. 3-87, (p. 3-125)	

Parameter							Address
Default	**Min**	**Max**	**Unit**				**Logic Diagram**
OL_DA: Offset THRM2 replica							004 192
Not measured	-25000	25000	%				
Display of the additional reserve if the coolant temperature is taken into account. This display is relevant if the coolant temperature has been set to a value below the maximum permissible coolant temperature or, in other words, if the thermal model has been shifted downwards. If, on the other hand, the coolant temperature and the maximum permissible coolant temperature have been set to the same value, then the coolant temperature is not taken into account and the characteristic is a function of the current only. The additional reserve amounts to 0 in this case.							
OL_DA: Status THRM2 replica							004 185
Not measured	0	250	%				
Display of the buffer content of the thermal overload protection function, THRM1 or THRM2.							
OL_DA: Load current THRM2							004 189
Not measured	0.00	3.00	Inom				
Display of the load current used by the thermal overload protection function, THRM1 or THRM2, respectively, to calculate the tripping time.							
OL_DA: Object temp. THRM2							004 186
Not measured	-40	300	°C				
Display of the temperature of the protected object.							
OL_DA: Pre-trip t.leftTHRM2							004 188
Not measured	0.0	1000.0	min				
Display of the time remaining before the thermal overload protection function will reach the trip threshold.							

Fault data acquisition

Parameter							Address
Default	**Min**	**Max**	**Unit**				**Logic Diagram**
FT_DA: Fault duration							008 010
Not measured	0.0	6500.0	s	Fig. 3-90, (p. 3-130)			
Display of the fault duration.							
FT_DA: Running time							004 021
Not measured	0.00	65.00	s	Fig. 3-90, (p. 3-130)			
Display of the running time.							
FT_DA: Fault determ. with							004 198
0: No fault				Fig. 3-91, (p. 3-131)			
This display indicates when the fault data were stored.							
FT_DA: Run time to meas.							004 199
Not measured	0.000	65.000	s	Fig. 3-91, (p. 3-131)			
Display of the fault data acquisition time from the onset of the fault.							
FT_DA: Fault curr. P,A prim							010 199
Not measured	0	65000	A				
FT_DA: Fault curr. P,B prim							013 175
Not measured	0	65000	A				
FT_DA: Fault curr. P,C prim							013 177
Not measured	0	65000	A				
Display of the fault current as a primary quantity.							
FT_DA: Fault curr. N,A prim							010 216
Not measured	0	65000	A				
FT_DA: Fault curr. N,B prim							013 176
Not measured	0	65000	A				
FT_DA: Fault curr. N,C prim							013 178
Not measured	0	65000	A				
Display of the ground fault current as a primary quantity.							
FT_DA: Fault curr.IP,a p.u.							025 086
Not measured	0.00	99.00	Inom	Fig. 3-92, (p. 3-132)			
FT_DA: Fault curr.IP,b p.u.							026 086
Not measured	0.00	99.00	Inom	Fig. 3-92, (p. 3-132)			
FT_DA: Fault curr.IP,c p.u.							027 086
Not measured	0.00	99.00	Inom	Fig. 3-92, (p. 3-132)			
Display of the maximum phase current of the respective end at the data acquisition time, referred to I_{nom}.							

Parameter					Address
Default	**Min**	**Max**	**Unit**		**Logic Diagram**
FT_DA: Fault curr.IN,a p.u.					025 087
Not measured	0.00	99.00	Inom	Fig. 3-92, (p. 3-132)	
FT_DA: Fault curr.IN,b p.u.					026 087
Not measured	0.00	99.00	Inom	Fig. 3-92, (p. 3-132)	
FT_DA: Fault curr.IN,c p.u.					027 087
Not measured	0.00	99.00	Inom	Fig. 3-92, (p. 3-132)	
Display of the residual current of the respective end, calculated by the P633 at the data acquisition time, referred to I_{nom}.					
FT_DA: Fault curr.IY,a p.u.					025 088
Not measured	0.00	99.00	Inom	Fig. 3-92, (p. 3-132)	
FT_DA: Fault curr.IY,b p.u.					026 088
Not measured	0.00	99.00	Inom	Fig. 3-92, (p. 3-132)	
FT_DA: Fault curr.IY,c p.u.					027 088
Not measured	0.00	99.00	Inom	Fig. 3-92, (p. 3-132)	
Display of the current value as a quantity referred to I_{nom} measured by the P633 at the T14, T24 or T34 transformers and at the time at which acquisition of fault data takes place.					
FT_DA: Diff. current 1					005 082
Not measured	0.00	99.00	Iref	Fig. 3-93, (p. 3-133)	
Display of differential current, measuring system 1, referred to I_{ref}.					
FT_DA: Diff.current 1(2*f0)					005 084
Not measured	0.00	99.00	Iref	Fig. 3-93, (p. 3-133)	
Display of the differential current, measuring system 2, referred to I_{ref}.					
FT_DA: Diff.current 1(5*f0)					005 085
Not measured	0.00	99.00	Iref	Fig. 3-93, (p. 3-133)	
Display of the differential current, measuring system 3, referred to I_{ref}.					
FT_DA: Restrain. current 1					005 083
Not measured	0.00	99.00	Iref	Fig. 3-93, (p. 3-133)	
Display of restraining current, measuring system 1, referred to I_{ref}.					
FT_DA: Diff. current 2					006 082
Not measured	0.00	99.00	Iref	Fig. 3-93, (p. 3-133)	
Display of differential current, measuring system 2, referred to I_{ref}.					
FT_DA: Diff.current 2(2*f0)					006 084
Not measured	0.00	99.00	Iref	Fig. 3-93, (p. 3-133)	
Display of second harmonic in differential current, measuring system 2, referred to I_{ref}.					

Parameter					Address
Default	**Min**	**Max**	**Unit**		**Logic Diagram**
FT_DA: Diff.current 2(5*f0)					006 085
Not measured	0.00	99.00	Iref	Fig. 3-93, (p. 3-133)	
Display of the fifth harmonic component of the differential current, measuring system 1, referred to I_{ref}.					
FT_DA: Restrain. current 2					006 083
Not measured	0.00	99.00	Iref	Fig. 3-93, (p. 3-133)	
Display of restraining current, measuring system 2, referred to I_{ref}.					
FT_DA: Diff. current 3					007 082
Not measured	0.00	99.00	Iref	Fig. 3-93, (p. 3-133)	
Display of the differential current for measuring system 1, 2 or 3, respectively, referred to I_{ref}.					
FT_DA: Diff.current 3(2*f0)					007 084
Not measured	0.00	99.00	Iref	Fig. 3-93, (p. 3-133)	
Display of the second harmonic component of the differential current for measuring system 1, 2 or 3, respectively, referred to I_{ref}.					
FT_DA: Diff.current 3(5*f0)					007 085
Not measured	0.00	99.00	Iref	Fig. 3-93, (p. 3-133)	
Display of the fifth harmonic component of the differential current for measuring system 1, 2 or 3, respectively, referred to I_{ref}.					
FT_DA: Restrain. current 3					007 083
Not measured	0.00	99.00	Iref	Fig. 3-93, (p. 3-133)	
Display of the restraining current for measuring system 1, 2 or 3, respectively, referred to I_{ref}.					
FT_DA: Diff. current REF_1					025 082
Not measured	0.00	99.00	Iref	Fig. 3-94, (p. 3-134)	
FT_DA: Diff. current REF_2					026 082
Not measured	0.00	99.00	Iref	Fig. 3-94, (p. 3-134)	
FT_DA: Diff. current REF_3					027 082
Not measured	0.00	99.00	Iref	Fig. 3-94, (p. 3-134)	
Display of the differential current, determined by the ground differential protection function (REF_1, REF_2 or REF_3, respectively), referred to I_{ref}.					
FT_DA: Restrain.curr. REF_1					025 083
Not measured	0.00	99.00	Iref	Fig. 3-94, (p. 3-134)	
FT_DA: Restrain.curr. REF_2					026 083
Not measured	0.00	99.00	Iref	Fig. 3-94, (p. 3-134)	

Parameter							Address
Default	**Min**	**Max**	**Unit**			**Logic**	**Diagram**
FT_DA: Restrain.curr. REF_3							027 083
Not measured	0.00	99.00	Iref	Fig. 3-94, (p. 3-134)			
Display of the restraining current, determined by the ground differential protection function (REF_1, REF_2 or REF_3, respectively), referred to I_{ref}.							

Over-/ underfrequency protection

Parameter							Address
Default	**Min**	**Max**	**Unit**			**Logic**	**Diagram**
f<>: Max. frequ. for f>							005 002
Not measured	12.00	70.00	Hz				
Maximum frequency during an overfrequency condition.							
f<>: Min. frequ. for f<							005 001
Not measured	12.00	70.00	Hz				
Minimum frequency during an underfrequency condition.							

8.2.3 Event Recording

Overload recording

Parameter							Address
Default	**Min**	**Max**	**Unit**			**Logic**	**Diagram**
OL_RC: Overload recording 1							033 020
0	0	9999		Fig. 3-89, (p. 3-127)			
OL_RC: Overload recording 2							033 021
0	0	9999					
OL_RC: Overload recording 3							033 022
0	0	9999					
OL_RC: Overload recording 4							033 023
0	0	9999					
OL_RC: Overload recording 5							033 024
0	0	9999					
OL_RC: Overload recording 6							033 025
0	0	9999					
OL_RC: Overload recording 7							033 026
0	0	9999					
OL_RC: Overload recording 8							033 027
0	0	9999					
Point of entry into the overload log.							

Fault recording

Parameter							Address
Default	Min	Max	Unit				Logic Diagram
FT_RC: Fault recording 1							003 000
0	0	9999					
FT_RC: Fault recording 2							033 001
0	0	9999					
FT_RC: Fault recording 3							033 002
0	0	9999					
FT_RC: Fault recording 4							033 003
0	0	9999					
FT_RC: Fault recording 5							033 004
0	0	9999					
FT_RC: Fault recording 6							033 005
0	0	9999					
FT_RC: Fault recording 7							033 006
0	0	9999					
FT_RC: Fault recording 8							033 007
0	0	9999					
Point of entry into the fault log.							

9 IEC 61850 Settings via IED Configurator

This chapter lists all IEC 61850-specific settings, that are carried out with the configuration tool “IED Configurator”.

The sequence in which the settings are listed and described in this chapter corresponds to their sequence in the menu tree of the “IED Configurator”.

However, only those setting parameters are described that are mandatory for establishing the IEC 61850 communication.

Further setting parameters are listed in the “Settings” chapter under the function groups IEC and GOOSE. A list of all available *Logical Nodes* can be found in a separate document.

9.1 Manage IED

The menu item “Manage IED” allows for establishing a connection between the “IED Configurator” and the device.

The P633 features two memory “banks” one of which includes the active setting parameters. The other memory bank is used with the configuration procedure for parameters via “IED Configurator” or operating program.

Toggling between active and inactive memory bank is carried out either by executing the parameter **IEC: Switch Config. Bank** or via “IED Configurator” (after the connection has been established) by pressing the “Switch Banks” button.

Active Bank

Parameter
SCL File ID
Name of the configuration bank currently valid. Setting is carried out with the *IED Configurator*, after a connection with the device has been established (via menu item “Manage IED”).
SCL File Version
Version number of the configuration bank currently valid. Setting is carried out with the *IED Configurator*, after a connection with the device has been established (via menu item “Manage IED”).

Inactive Bank

Parameter
SCL File ID
Name of the inactive configuration bank. Setting is carried out with the *IED Configurator*, after a connection with the device has been established (via menu item “Manage IED”).
SCL File Version
Version number of the inactive configuration bank. Setting is carried out with the *IED Configurator*, after a connection with the device has been established (via menu item “Manage IED”).

9.2 IED Details

The category “IED Details” contains several settings that characterize the device as well as the SCL file, which identifies the IEC 61850 configuration.

SCL Details

Parameter	Default Value
SCL File ID	PX 633
Identification of the .MCL configuration file. If required, this preset value may be modified by, for example, entering a bay name.	
SCL File Version	251.2.01
Specific value to identify the IEC 61850 data model and configuration. If required, this preset value may be modified by, for example, identifying the revision states during engineering.	

IED Details

Parameter	Address
Name	104 057
Explicitly assigned device name for the function in the system (IED); is part of the Logical Device Name. **Important note:** According to the IEC standard the name must consist of only letters (A..Z, a..z), digits (0..9) and underscore characters (_), and the name must start with a letter. Note that a non-standard name causes problems with the IEC 61850 communication.	

Template Details

Parameter
ICD Template
SCL Schema Version
Description
Type
Configuration Revision
Supported Models
The values listed in the column “Template Details” only provide information. They are preset and cannot be modified.

9.3 Communications

The category “Communications” contains the general network-related settings.

Connected Sub-Network

Parameter	Default Value	
Interface 1 Connected Sub-Network	NONE	
Interface 2 Connected Sub-Network	NONE2	
Optional name available to identify the Ethernet network.		
Access Point	AP1	
Part of the communications control; preset, cannot be modified.		

Address Configuration

Parameter	Default Value	Address
Enable VLANs	false	
Checkbox to enable/disable VLANs. When the checkbox is checked, all configurations for physical Interfaces that have defined any VLANs will be replaced by the configuration of these VLANs (grouped by physical interfaces).		
Enable Port Assignment	false	
Checkbox to enable/disable Port Assignment. When the checkbox is checked, Port Assignments configuration will appear for all physical interfaces supported by the device.		

Parameter Interface 1	Default Value	Address
IP Address	0.0.0.0	104 001
Assigned IP address of the Interface1 of P633 for the server function in the system.		
SubNet Mask	0.0.0.0	104 005
The subnet mask defines which part of the IP address is addressed by the sub-network and which part by the device that is logged-on to the network.		
Gateway Address	0.0.0.0	104 011
This parameter shows the IPv4 address of the network gateway for communication links to clients outside of the local network.		

Parameter Interface 2 (if fitted)	Default Value	Address
IP Address	0.0.0.0	104 070
Assigned IP address of the Interface2 of P633 for the server function in the system.		
SubNet Mask	0.0.0.0	104 071
The subnet mask defines which part of the IP address is addressed by the sub-network and which part by the device that is logged-on to the network.		
Gateway Address	0.0.0.0	104 072
This parameter shows the IPv4 address of the network gateway for communication links to clients outside of the local network.		

Parameter Interface 1 VLAN1/VLAN2	Default Value	Address
VLAN Id (hex)	1 2	104 092 104 096
Assigned VLAN ID of Interface 1. (These parameters appear when checkbox of Enable VLANs is switched on.)		
IP Address	192.168.10.4 192.168.11.4	104 091 104 094
Assigned IP address of VLAN in the system.		
SubNet Mask	255.255.255.0 255.255.255.0	104 093 104 097
The subnet mask of VLAN defines which part of the IP address is addressed by the sub-network and which part by the device that is logged-on to the network.		
Gateway Address	0.0.0.0 0.0.0.0	104 094 104 098
This parameter shows the IPv4 address of the network gateway of the VLAN for communication links to clients outside of the local network.		

Parameter	Default Value	Address
IEC 61850 (MMS)		
Checkbox to enable/disable MMS services including report. (These parameters can be configured for Interface1, Interface2, VLAN1 and VLAN2 separately when checkbox of Enable Port Assignment is switched on.)		
Network Time Protocol (NTP)		
Checkbox to enable/disable NTP service.		
IED Configuration (TLS)		
Checkbox to enable/disable services via TLS to configure the device from Easergy Studio.		
Basic Administration (SSH/SFTP)		
Checkbox to enable/disable loader service e.g. Update firmware, Read/Write MAC addresses.		
User management (RBAC) (Webservice)		
Checkbox to enable/disable web services for the SAT tool to configure security and the RBAC.		

General Configuration

Parameter	Default Value	
TCP Keepalive	5 seconds	
Communication monitoring at TCP level.		
Database Lock Timeout	2 minutes	
Return time period for setting procedures that have commenced. (The default value above is in seconds. The *IED Configurator*, however, displays converts this to minutes.)		

9.4 SNTP

The category “SNTP” contains the clock synchronization settings.

9.4.1 General Config

Client Operation

Parameter	Default Value
Poll Rate (seconds)	64
Polling interval for clock synchronization.	
Accepted Stratum Level	All levels (0 - 15)
Quality criterion to accept an SNTP server for clock synchronization; preset, cannot be modified.	

9.4.2 External Server 1

Settings for the primary clock synchronization server.

Note that all values except **IP Address** and the “Use Anycast” button are usually disabled and may be accepted only when imported from an XML configuration file.

External Server Parameters

Parameter	Default Value	Address
IP Address	0.0.0.0	104 202
IP address of the preferred server used for clock synchronization. Clicking the “Use Anycast” button in the *IED Configurator* changes the value such that any server in the local network is appointed to provide clock synchronization.		

9.4.3 External Server 2

Settings for the backup clock synchronization server.

Note that all values except **IP Address** and the “Use Anycast” button are usually disabled and may be accepted only when imported from an XML configuration file.

External Server Parameters

Parameter	Default Value	Address
IP Address	0.0.0.0	104 210
IP address of the backup server used for clock synchronization. Clicking the “Use Anycast” button in the *IED Configurator* changes the value such that any server in the local network is appointed to provide clock synchronization.		

9.5 Dataset Definitions

Dataset Definitions

Parameter
Name
Explicitly (and uniquely) assigned name for the dataset.
Location
Saving datasets at System/LLN0 is compulsory.
Contents
Content (data objects, data attributes) of a dataset. The “GOOSE Capacity” display allows for checking the length of a dataset for less than 1500 bytes to permit transmission in GOOSE messages. **Note:** It is not possible to read the IEC configuration back from the P633 if the “Dataset” sizes exceed the GOOSE size limit significantly. Too large a dataset can spoil IEC 61850 communication. Hence, the dataset size limit of 100% of the GOOSE capacity should not be exceeded, neither for GOOSE nor for reports.

9.6 GOOSE Publishing

9.6.1 System/LLN0

Network Parameters

Parameter	Default Value
Multicast MAC Address	01-0C-CD-01-00-00
Virtual MAC address that the sending device provides as the destination; preset.	
Application ID (hex)	0000
Explicitly (and uniquely) assigned ID-number of the GOOSE.	
VLAN Identifier (hex)	0
ID-number of the virtual LAN with which the GOOSE is sent; preset.	
VLAN Priority	4
Priority with which the GOOSE is sent in the virtual LAN; preset.	

Repeat Message Transmission Parameters

Parameter	Default Value
Minimum Cycle Time	10 ms
First send repetition of the GOOSE occurring after the set time period; preset.	
Maximum Cycle Time	1 s
Continuous send repetition of the GOOSE occurring after the set time period; preset.	
Increment	900
Specification factor for the transition of time intervals for GOOSE send repetitions from the first to the continuous repetition.	

Message Data Parameters

Parameter	Default Value
GOOSE Identifier	TEMPLATESystem/ LLN0GOgcb01
GOOSE ID consisting of the Device Name and the GOOSE Control Block.	
Dataset Reference	
Name of the dataset assigned to the GOOSE.	
Configuration Revision	1
Revision status of the configuration.	

9.7 GOOSE Subscribing

9.7.1 Mapped Inputs

Source Network Parameters

Parameter	Default Value	
Multicast MAC Address	01-0C-CD-01-00-00	
Virtual MAC address used as a receive filter; preset.		
Application ID (hex)	0	
ID-number of the GOOSE.		

GOOSE Source Parameters

Parameter	Default Value
Source Path	
Information data attribute in the transmitting device.	
GOOSE Identifier	
ID of the GOOSE in the transmitting device.	
Dataset Reference	
Name of the dataset assigned to the GOOSE in the transmitting device.	
Configuration Revision	0
Configuration revision status of the transmitting device.	
Data Obj Index	1
Position index of the data object within the GOOSE.	
Data Obj Type	Unknown
Structure of the data object; possible settings: ● *Unknown* ● *Boolean* (logical value) ● *Int8* (Integer, with 8 digits) ● *Int16* (Integer, with 16 digits) ● *Int32* (Integer, with 32 digits) ● *UInt8* (Positive integer, with 8 digits) ● *UInt16* (Positive integer, with 16 digits) ● *UInt32* (Positive integer, with 32 digits) ● *Float* (Floating-point number) ● *BStr2* (Binary state, with 2 digits) ● *SPS* (Single-pole signal) ● *DPS* (Two-pole signal)	
Quality Obj Index	1
Distance of the quality descriptor to the data object if not preset. The quality of the received information is to be tested if such has been configured.	

Destination Parameters

Parameter	Default Value
Evaluation Expression	Equal to
Criteria to check the received information content by comparing it with a set integer value; the parameter is not supported in the device. ● *Equal to* (Compared to: equal) ● *Not equal to* (Compared to: unequal) ● *Greater than* (Compared to: greater) ● *Less than* (Compared to: less) ● *Pass through* (Do not compare)	
Default Input Value	False
Default value for the information in case GOOSE receipt has failed. ● *False* – not set ● *True* – set ● *Last Known Value* – retain last value received ● *Double Point: intermediate (00)* – switching device in intermediate position ● *Double Point: Off (01)* – switching device open ● *Double Point: On (10)* – switching device closed ● *Double Point: Bad state (11)* – switching device in intermediate position	
Invalidity Quality bits	
Quality criterion, which is to be tested. ● *Invalid / Questionable*: Invalid / questionable ● *Source*: Information source is faulty ● *Relay test*: Sending device is set to test mode ● *OperatorBlocked*: Blocked by operator and ● *Overflow*: Measured value has exceeded its capacity ● *OutofRange*: Measured value has exceeded its range ● *BadReference*: Referenced value is faulty ● *Oscillatory*: Value is volatile ● *Failure*: Faulty ● *OldData*: Information is out-of-date ● *Inconsistent*: Information is unreliable ● *Inaccurate*: Information is inaccurate	

9.8 Report Control Blocks

9.8.1 System/LLN0

Report Parameters

Parameter	Default Value
Report Type	
Report type: ● *Unbuffered* (updating) ● *Buffered* (saving)	
Report ID	TEMPLATESystem/LLN0RPurcbA, ..., TEMPLATESystem/LLN0RPurcbP, ..., TEMPLATESystem/LLN0BRbrcbA, ..., TEMPLATESystem/LLN0BRbrcbH
Report ID consisting of the Device Name and the Report Control Block.	
Dataset Reference	
Name of the dataset assigned to the report.	
Configuration Revision	1
Revision status of the configuration.	

9.9 Controls

9.9.1 Control Objects

Control Object Parameters

Parameter
ctlModel
To control external devices the following operating modes can be set: ● *Status only* (manually operated switching device) ● *Direct control with enhanced security* (direct command issue with extended monitoring of command effecting) ● *SBO (Select before operate) with enhanced security* (switching device selection procedure with extended monitoring of command effecting)
sboTimeout
Return time period after selection without issuing a command.

9.9.2 Uniqueness of Control

Source Network Parameters

Parameter	Default Value	
Multicast MAC Address	01-0C-CD-01-00-00	
Virtual MAC address used as a receive filter; preset.		
Application ID (hex)	0	
ID-number of the GOOSE.		

GOOSE Source Parameters

Parameter	Default Value
Source Path	
Information data attribute in the transmitting device.	
GOOSE Identifier	
ID of the GOOSE in the transmitting device.	
Dataset Reference	
Name of the dataset assigned to the GOOSE in the transmitting device.	
Configuration Revision	0
Configuration revision status of the transmitting device.	
Data Obj Index	1
Position index of the data object within the GOOSE.	
Default Input Value	True
Default value for the information in case GOOSE receipt has failed: ● *False* – not set ● *True* – set ● *Last Known Value* – retain last value received ● *Double Point: intermediate (00)* – switching device in intermediate position ● *Double Point: Off (01)* – switching device open ● *Double Point: On (10)* – switching device closed ● *Double Point: Bad state (11)* – switching device in intermediate position	

9.10 Measurements

Scaling

Parameter
Unit Multiplier
Multiplication factor; not supported.

Range configuration

Parameter
Scaled Measurement Range: Min **Scaled Measurement Range: Max**
Lower / Upper measuring range limit value; not supported.

Deadband Configuration

Parameter	Default Value
Deadband	10000
Multiplier for the smallest display value of the measured value. In order to have the current measured value sent when it has changed from the value last sent the result of the set dead band value multiplied by the smallest display value must exceed the smallest display value.	

9.11 Configurable Data Attributes

9.11.1 System/LLN0

Mod.measCyc

Parameter
Value
Transmission of measured values: Time interval in seconds between two dead band evaluations.

Mod.enCyc

Parameter
Value
Cyclic transmission of measured values without dead band check: Time interval in seconds between transmissions of two energy count values.

Mod.comtrade

Parameter
Value
Transmission of COMTRADE fault files formatted either as ASCII or binary files.

Mod.distExtr

Parameter
Value
Cancelling fault transmission or including it in the configuration.

10 Commissioning

10.1 Safety Instructions

DANGER

HAZARD OF ELECTRIC SHOCK, EXPLOSION, OR ARC FLASH

- Only qualified personnel, trained, authorized and familiar with the device and all the safety instructions in the general Safety Guide (SFTY/5LM/L11 or later version) and appropriate Chapter 5, Chapter 10, Chapter 11, Chapter 12 and Chapter 13 of this manual, shall work on installation, connection, commissioning, maintenance or servicing of this device.
- When installing and connecting the device the warning notices at the beginning of Chapter “Installation and Connection” (Chapter 5) must be observed.

Failure to follow these instructions will result in death or serious injury.

DANGER

HAZARD OF ELECTRIC SHOCK, EXPLOSION, OR ARC FLASH

- Switch off the auxiliary power supply before any work in the terminal strip area.
- Switch off all the power supplies in connection to the equipment before any work in the terminal strip area to isolate the device.
- Do not touch the terminal strip area when equipment is in operation.
- Do not remove or add wires in the terminal strip area when equipment is in operation.
- Short-circuit the system current transformers before disconnecting wires to the transformer board (valid only for pin terminals, not required for ring terminals which have a shortening block).
- A protective conductor (ground/earth) of at least 1.5 mm^2 must be connected to the protective conductor terminal on the power supply board and on the main relay case.
- Do never remove the protective conductor connection to the device casing as long as other wires are connected to it.
- Where stranded conductors are used, insulated crimped wire end ferrules must be employed.

Failure to follow these instructions will result in death or serious injury.

Note: Regarding the appropriate wiring connections of the equipment refer to the document Px3x_Grounding_Application_Guide_EN_h.pdf.

DANGER

HAZARD OF ELECTRIC SHOCK, EXPLOSION, OR ARC FLASH

- The device must be reliably grounded to meet protective equipment grounding requirements.
- The surface-mounted case is grounded using the bolt and nut, appropriately marked, as the ground connection. The flush-mounted case must be grounded in the area of the rear sidepieces at the location provided. The bracket is marked with the protective ground symbol: ⏚. The cross-section of the ground conductor must conform to applicable national standards. A minimum cross section of 2.5 mm² (≤ AWG12) is required.
- In addition, a protective ground connection at the terminal contact on the power supply module (identified by the letters “PE” on the terminal connection diagram) is also required for proper operation of the device. The cross-section of this ground conductor must also conform to applicable national standards. A minimum cross section of 1.5 mm² (US: AWG14 or thicker) is required.
- If a detachable HMI is installed, a further protective conductor (ground/earth) of at least 1.5 mm² (US: AWG14 or thicker) must be connected to the DHMI protective conductor terminal to link the DHMI and the main relay case; these must be located within the same substation.
- All grounding connections must be low-inductance, i.e. it must be kept as short as possible.
- The protective conductor (earth) must always be connected to the protective grounding conductor terminal in order to guarantee the safety given by this setup.

Failure to follow these instructions will result in death or serious injury.

DANGER

HAZARD OF ELECTRIC SHOCK, EXPLOSION, OR ARC FLASH

- Application of analog signals to the measuring inputs must be in compliance with the maximum permissible rating of the measuring inputs (see “Technical Data”, Chapter 2).
- Do not open the secondary circuit of live system current transformers! If the secondary circuit of a live CT is opened, there is the danger that the resulting voltages will endanger personnel and damage the insulation.
- For pin-terminal connection devices, the terminal block for system current transformer connection is not a shorting block! Therefore always short-circuit the system current transformers before loosening the threaded terminals.

Failure to follow these instructions will result in death or serious injury.

DANGER

HAZARD OF ELECTRIC SHOCK, EXPLOSION, OR ARC FLASH

- The power supply must be turned off for at least 5 s before power supply module V is removed. Otherwise there is the danger of an electric shock.

Failure to follow these instructions will result in death or serious injury.

DANGER

HAZARD OF ELECTRIC SHOCK, EXPLOSION, OR ARC FLASH

- When increased-safety machinery is located in a hazardous area the device must always be installed outside of this hazardous area to protect this equipment.

Failure to follow these instructions will result in death or serious injury.

DANGER

HAZARD OF ELECTRIC SHOCK, EXPLOSION, OR ARC FLASH

- The PC interface is not designed as a permanent connection. Consequently, the female connector does not have the extra insulation from circuits connected to the system that is required per IEC/EN 60255-27. Therefore DO NOT leave any permanent cable connection on the PC interface connector at the HMI front panel.

Failure to follow these instructions will result in death or serious injury.

DANGER

HAZARD OF ELECTRIC SHOCK, EXPLOSION, OR ARC FLASH

- Do not connect or disconnect the RS 485 or fiber-optic interface when the supply voltage for the device is under power and in operation.

Failure to follow these instructions will result in death or serious injury.

⚠ WARNING

HAZARD OF UNINTENDED EQUIPMENT OPERATION

- When using the programmable logic (function group LOGIC), the user must carry out a functional type test to conform to the requirements of the relevant protection/control application.
- In particular, it is necessary to verify that the requirements for the implementation of logic linking (by setting) as well as the time performance during device startup, during operation and when there is a fault (device blocking) are fulfilled.

Failure to follow these instructions can result in unintended equipment operation.

10.2 Commissioning Tests

10.2.1 Preparation

After the P633 has been installed and connected as described in Chapter 5, (p. 5-1), the commissioning procedure can begin.

Before turning on the power supply voltage, the following items must be checked again:

- Is the device connected to the protective ground at the specified location?
- Does the nominal voltage of the battery agree with the nominal auxiliary voltage of the device?
- Are the current and voltage transformer connections, grounding, and phase sequences correct?

After the wiring work is completed, check the system to make sure it is properly isolated. The conditions given in IEC/EN 60255-27 must be satisfied.

Once all checks have been made, the power supply voltage may be turned on. After voltage has been applied, the device starts up. During startup, various startup tests are carried out (see Section 3.15, (p. 3-119)). The LED indicators for HEALTHY (H1) and OUT OF SERVICE (H2) will light up. After approximately 15 s, the P633 is ready for operation. By default (factory setting) or after a cold restart, the device type “P633” and the time are displayed on the first line of the LCD after the device has started up. If a bay type has already been selected this bay will then be shown as a single-pole display.

Once the change enabling command has been issued (see Section 6.13.3, (p. 6-23)), all settings can be entered. The procedure for entering settings from the integrated local control panel is described in Section 6.13.4, (p. 6-26).

First the type of bay wanted is to be set at MAIN: Type of bay, Par/Conf menu branch. When the automatic assignment has been enabled at MAIN: Auto-assignment I/O then selecting the type of bay will automatically configure binary signal inputs and output relays according to the definitions corresponding to the bay type.

After pressing the ENTER key to confirm the setting parameter MAIN: Type of bay the signal Bay initialization is displayed on the LCD for a time duration of 20 s. The LED indicator labeled EDIT MODE will light up. A control action is not possible during this time period.

If either the PC interface or the communication interface will be used for setting the P633 and reading out event records, then the following settings must first be made from the integrated local control panel.

***Par/DvID* menu branch:**

- DVICE: Device password 1
- DVICE: Device password 2

***Par/Conf* menu branch:**

- PC: Bay address
- PC: Device address
- PC: Baud rate
- PC: Parity bit
- COMM1: Function group COMM1
- COMM1: General enable USER
- COMM1: Name of manufacturer
- COMM1: Line idle state
- COMM1: Baud rate
- COMM1: Parity bit
- COMM1: Communicat. protocol
- COMM1: Octet comm. address
- COMM1: Octet address ASDU
- COMM2: Function group COMM2
- COMM2: General enable USER
- COMM2: Name of manufacturer
- COMM2: Line idle state
- COMM2: Baud rate
- COMM2: Parity bit
- COMM2: Octet comm. address
- COMM2: Octet address ASDU

***Par/Func/Glob* menu branch:**

- PC: Command blocking
- PC: Sig./meas.val.block.
- COMM1: Command block. USER
- COMM1: Sig./meas.block.USER
- COMM2: Command block. USER
- COMM2: Sig./meas.block.USER

Instructions on these settings are given in Chapters “Settings” and “Information and Control Functions”.

The settings given above apply to the IEC 60870-5-103 communication protocol. If another protocol is being used for the communication interface, additional settings may be necessary. See Chapter “Settings” for further details.

After the settings have been made, the following checks should be carried out again before the blocking is cancelled:

- Is the correct bay type configured?
- Does the function assignment of the binary signal inputs agree with the terminal connection diagram?
- Has the correct operating mode been selected for the binary signal inputs?
- Does the function assignment of the output relays agree with the terminal connection diagram?
- Has the correct operating mode been selected for the output relays?
- Are the interlocking conditions and the external interlock inputs correctly configured?
- Have all settings been made correctly?

Now blocking can be cleared as follows (*Par/Func/Glob* menu branch):

- OUTP: Outp.rel.block USER = *Yes*
- MAIN: Device on-line = *Yes (= on)*

10.2.2 Cyber Security Commission

For Easergy MiCOM 30 without Cyber Security, password is managed and modified through HMI and Easergy Studio only, as previous password management.

For device with Cyber Security, access to some parts of the menu is only possible with an user authentification after "Log in" with an user name and password. The user should "Log out" after operation (see Section 3.3.1, (p. 3-4)).

The Security Administration Tool (SAT) is used to access to security functions rights with the security administration role (by default). It provides:

- User accounts setting.
- Rights and roles management.
- Rights and roles administration.

User accounts setting button gives access to user informations and authentification tools: you can manage login (user name and password and arrow password), login attempts, inactivity time etc.).

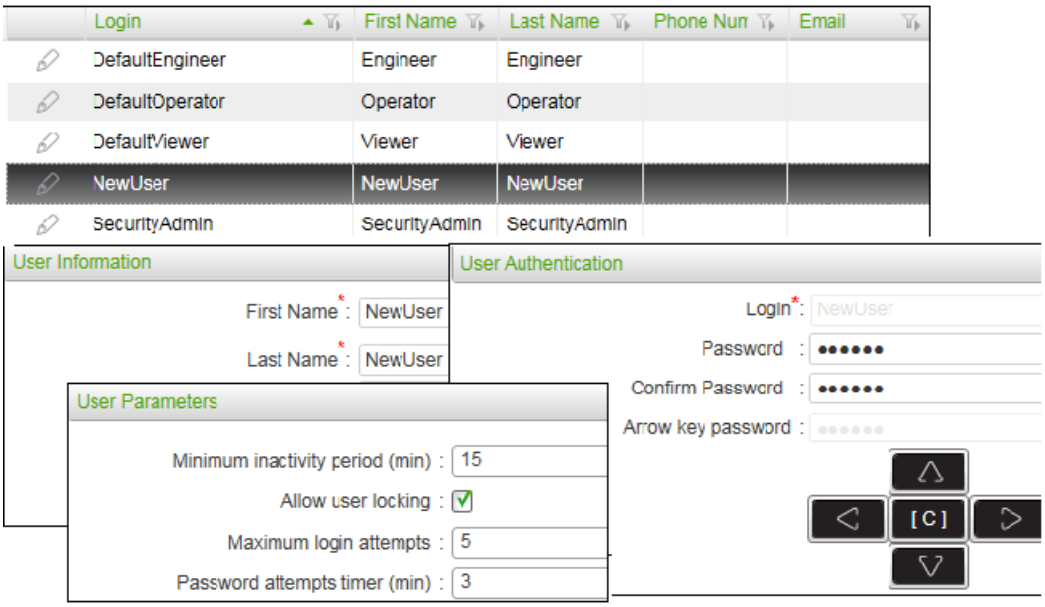

You can associate (add or remove) role(s) to an user account:

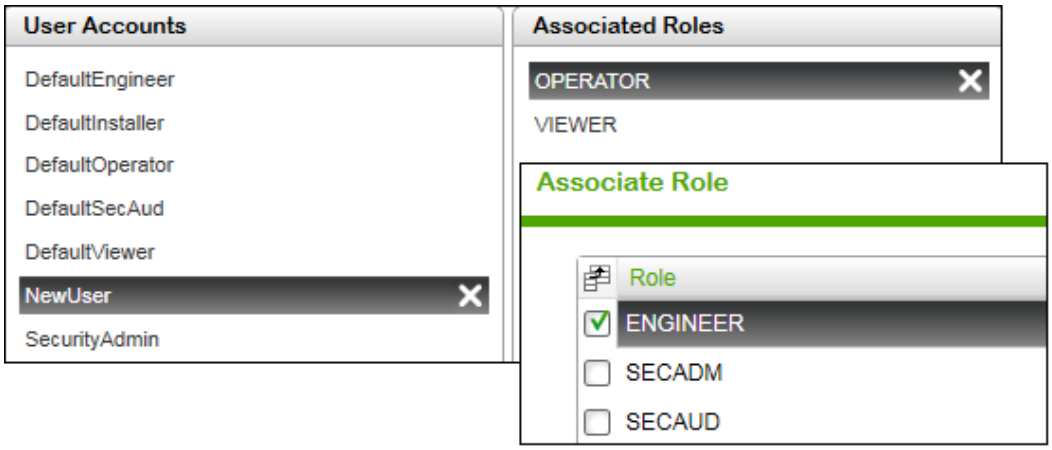

You can edit rights (associated Element To Secure (ETS)) for each role:

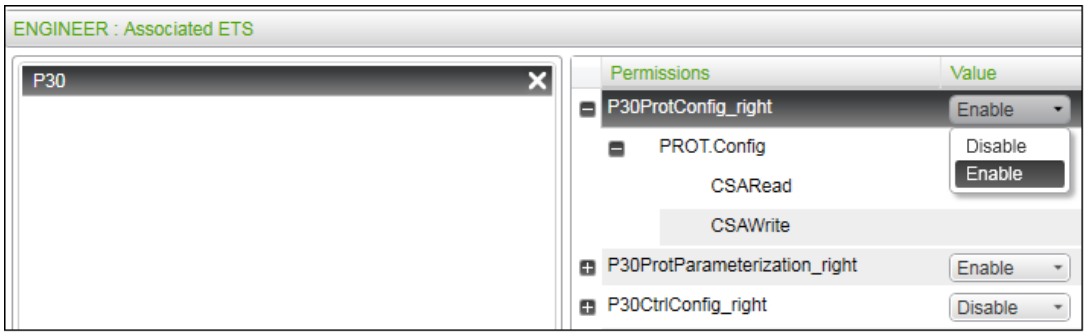

You can edit Elements To Secure (ETS) by editing permissions, objects and rights:

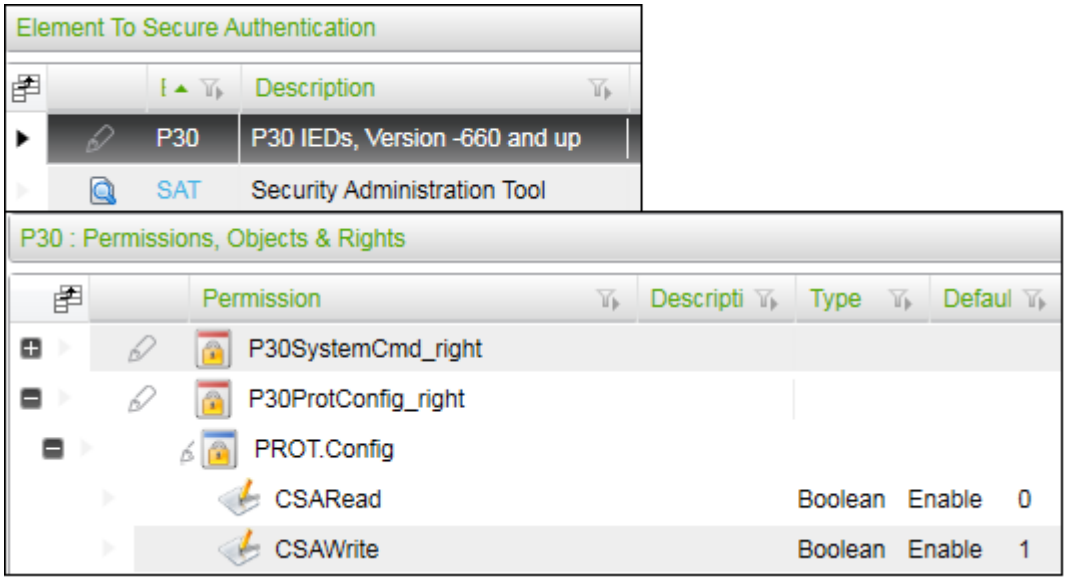

Set “Network Device List...” to select file to send to the device.

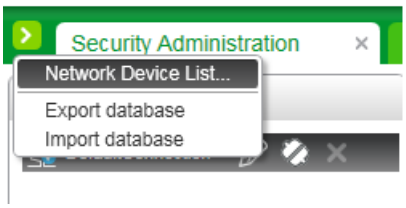

Please, refer to the “Security Administration Tool ” for complete information about security administration tool.

10.2.3 Testing

When testing trip or close commands configured to standard outputs, the CB must not be mechanically locked, so that its auxiliary 52a/b contact could operate and break the DC current. If the CB has to stay locked, tripping or closing circuit has to be opened by terminal disconnection or test switch. Otherwise there is a high risk of damaging the P633 output contact.

By using the signals and displays generated by the P633, it is possible to determine whether the P633 is correctly set and properly interconnected with the station. Signals are signaled by output relays and LED indicators and entered into the event memory. In addition, the signals can be checked by selecting the appropriate signal in the menu tree.

If the user does not wish the circuit breaker to operate during protection testing, the trip commands can be blocked through MAIN: Trip cmd.block. USER (*Par/Func/Glob* menu branch) or an appropriately configured binary signal input. If circuit breaker testing is desired, it is possible to issue a trip command for 100 ms through MAIN: Man. trip cmd. USER (*Oper/CtrlTest* menu branch) or an appropriately configured binary signal input. Selection of the trip command from the integrated local control panel is password-protected (see Section 6.13.8, (p. 6-37)).

The manual trip command is not executed unless the manual trip is included in the selection of possible functions to effect a trip (in the configuration of trip commands).

If the P633 is connected at substation control level, the user is advised to activate the test mode via MAIN: Test mode USER (*Par/Func/Glob* menu branch) or an appropriately configured binary signal input. The telegrams are then identified accordingly (reason for transmission: test mode).

10.2.4 Checking the Binary Signal Inputs

By selecting the corresponding state signal (*Oper/Cycl/Phys* menu branch), it is possible to determine whether the input signal that is present is recognized correctly by the device. The values displayed have the following meanings:

- "*Low*": Not energized.
- "*High*": Energized.
- *Without function*: No functions are assigned to the binary signal input.

This display appears regardless of the binary signal input mode selected.

10.2.5 Checking the Output Relays

It is possible to trigger the output relays for a settable time period for test purposes (time setting at OUTP: Hold-time for test in *Oper/CtrlTest* menu branch). First select the output relay to be tested (OUTP: Relay assign. f.test, *Oper/CtrlTest* menu branch).

Test triggering then occurs via OUTP: Relay test (*Oper/CtrlTest* menu branch).

It is password-protected (see Section 6.13.8, (p. 6-37)).

DANGER

HAZARD OF ELECTRIC SHOCK, EXPLOSION, OR ARC FLASH

- Before starting the test, open any triggering circuits for external devices so that no inadvertent switching operations will take place.

Failure to follow these instructions will result in death or serious injury.

10.2.6 Checking the Protection Function

Four parameter subsets are stored in the P633, one of which is activated. Before checking the protective function, the user should determine which parameter subset is activated. The active parameter subset is displayed at PSS: Actual param. subset (*Oper/Cycl/Log* menu branch).

10.2.6.1 Checking Differential Protection

For single-side feed, the fault current characteristic crosses the first knee of the tripping characteristic of the P633 so that the basic threshold value is always checked.

The current I to which the P633 responds for single-side feed is calculated as follows:

$$I = \frac{I_{diff>} \cdot I_{nom,z}}{k_{am,z}}$$

- z: transformer end (a, b, c)
- $I_{diff>}$: set operate value
- $I_{nom,z}$: nominal current of the P633 for transformer end a, b, c
- $k_{am,z}$: amplitude-matching factor of transformer end a, b, c

For single-side one-phase or two-phase feed, a vector group-matching factor in accordance with the set vector group ID needs to be taken into account in addition to the amplitude-matching factor. The vector group-matching factors are given in the tables below and the threshold current is calculated as follows:

$$I \geq \frac{I_{diff>} \cdot I_{nom,z}}{k_{am,z} \cdot k_{s,y,z}}$$

- z: transformer end (a, b, c)
- $I_{diff>}$: set operate value
- $I_{nom,z}$: nominal current of the P633 for transformer end a, b, c
- $k_{am,z}$: amplitude-matching factor of transformer end a, b, c
- $k_{s,y,z}$: vector group-matching factor (see tables below)

The differential and restraining currents formed by the P633 are displayed as measured operating data. They aid in assessing whether the connection of the

P633 to the system current transformers and the setting of the vector group ID are correct. The tables below give the factors ks which serve to calculate the differential current for single-side feed. The display of differential and restraining currents is prevented, however, if they fall below minimum thresholds that can be set by the user.

$I_{d,y} = k_{am,z} \cdot k_{s,y,z} \cdot I_{test,x}$

- x: phase A, B or C
- z: transformer end (a, b, c)
- measuring system 1, 2 or 3
- $I_{d,y}$: differential current as displayed
- $k_{am,z}$: amplitude-matching factor of transformer end a, b, c
- $k_{s,y,z}$: vector group-matching factor (see tables below)
- $I_{test,x}$: test current phase A, B or C

In evaluating the test results, one should be aware that the P633 will trip as follows, if a value of $I_{diff>>}$ or $I_{diff>>>}$ is exceeded.

- $I_{diff>>}$ exceeded: Trip regardless of the inrush and overfluxing restraint;
- $I_{diff>>>}$ exceeded: Trip regardless of the restraining current and regardless of all other restraints.

Transformer end	a	b, c											
Vector group ID		0=12	1	2	3	4	5	6	7	8	9	10	11
DIFF: Diff. current 1	0.67	0.67	0.58	0.33	0.00	0.33	0.58	0.67	0.58	0.33	0.00	0.33	0.58
DIFF: Diff. current 2	0.33	0.33	0.00	0.33	0.58	0.67	0.58	0.33	0.00	0.33	0.58	0.67	0.58
DIFF: Diff. current 3	0.33	0.33	0.58	0.67	0.58	0.33	0.00	0.33	0.58	0.67	0.58	0.33	0.00

Tab. 10-1: Factors for single-side, one-phase feed in phase A, zero sequence-filtered.

Transformer end	a	b, c											
Vector group ID		0=12	1	2	3	4	5	6	7	8	9	10	11
DIFF: Diff. current 1	0.00	0.00	0.58	1.00	1.15	1.00	0.58	0.00	0.58	1.00	1.15	1.00	0.58
DIFF: Diff. current 2	1.00	1.00	1.15	1.00	0.58	0.00	0.58	1.00	1.15	1.00	0.58	0.00	0.58
DIFF: Diff. current 3	1.00	1.00	0.58	0.00	0.58	1.00	1.15	1.00	0.58	0.00	0.58	1.00	1.15

Tab. 10-2: Factors for single-side, two-phase, phase-opposition feed in phases B to C, zero sequence-filtered.

Transformer end	a	b, c					
Vector group ID		**0=12**	**2**	**4**	**6**	**8**	**10**
DIFF: Diff. current 1	1.00	1.00	0.00	0.00	1.00	0.00	0.00
DIFF: Diff. current 2	0.00	0.00	0.00	1.00	0.00	0.00	1.00
DIFF: Diff. current 3	0.00	0.00	1.00	0.00	0.00	1.00	0.00

Tab. 10-3: Factors for single-side, one-phase feed in phase A, not zero sequence-filtered.

Transformer end	a	b, c					
Vector group ID		**0=12**	**2**	**4**	**6**	**8**	**10**
DIFF: Diff. current 1	0.00	0.00	1.00	1.00	0.00	1.00	1.00
DIFF: Diff. current 2	1.00	1.00	1.00	0.00	1.00	1.00	0.00
DIFF: Diff. current 3	1.00	1.00	0.00	1.00	1.00	0.00	1.00

Tab. 10-4: Factors for single-side, two-phase, phase-opposition feed in phases B to C, not zero sequence-filtered.

The connection of the phase currents can be checked using the phase angles provided as measured operating data by the P633.

If the phase currents are connected correctly and there is an ideal balanced load on the transformer, the phase angles between the phase currents of any one transformer end are displayed as follows:

Phase sequence A–B–C

- $\varphi_{AB,z} = \varphi_{BC,z} = \varphi_{CA,z} = 120°$

Phase sequence A–C–B

- $\varphi_{AB,z} = \varphi_{BC,z} = \varphi_{CA,z} = -120°$

This is not influenced by the set value of the function parameter for the phase sequence.

The phase angle between the phase currents of two transformer ends for a particular phase is a function of the vector group of the transformer. This phase angle should be displayed as follows:

Vector group	
0 = 12	$\varphi_{x,A-z} = \pm 180°$
1	$\varphi_{x,A-z} = -150°$
2	$\varphi_{x,A-z} = -120°$
3	$\varphi_{x,A-z} = -90°$
4	$\varphi_{x,A-z} = -60°$
5	$\varphi_{x,A-z} = -30°$
6	$\varphi_{x,A-z} = 0°$
7	$\varphi_{x,A-z} = 30°$
8	$\varphi_{x,A-z} = 60°$
9	$\varphi_{x,A-z} = 90°$
10	$\varphi_{x,A-z} = 120°$
11	$\varphi_{x,A-z} = 150°$

This is not influenced by the set value of the function parameter for the phase sequence. Changing the setting for the connection scheme of an involved series transformer, on the other hand, will change the measured operating data value by ±180°.

10.2.6.2 Checking Ground Differential Protection

The current I to which the P633 responds for single-side feed, neutral-point side, is calculated as follows:

$$I \geq \frac{I_{diff>} \cdot I_{nom}}{k_{am,z}}$$

- z: transformer end (a, b, c)
- $I_{diff>}$: set operate value
- I_{nom}: nominal current of the P633
- $k_{am,z}$: amplitude-matching factor of transformer end a, b, c

There will be no trip for single-side, single-pole, phase-side feed.

The differential and restraining currents formed by the P633 are displayed. The display of differential and restraining currents is prevented, however, if they fall below minimum thresholds that can be set by the user.

10.2.7 Checking Control Functions

If the P633 has been ordered with control functions it should be noted for checks that the local control panel on the P633 does not feature specific keys for switching functions. If at this point mention of e.g. a “selection key” is made, then this would be a function key to which a specific function has been assigned – in this example MAIN: Device selection key (see Section 6.9.2, (p. 6-13)).

10.2.7.1 Local/Remote Selection

Controlling switchgear units may be carried out from keys on the local control panel, remotely via the communication interface or through appropriately configured binary signal inputs. The control site – *Local* or *Remote* – is selected by the L/R key on the local control panel or by an appropriately configured binary signal input. The L/R key has no effect when a binary signal input has been configured. Using the L/R key on the local control panel to switch from "*Remote*" to "*Local*" is only possible after the "Password L/R" was entered (see Chapter "Local Control Panel" for further information). The Bay Panel display will show which control site has been selected.

10.2.7.2 Local Control

The switchgear unit to be controlled is selected by pressing the selection key on the local control panel, and pressing the "Open" or "Close" key will generate a switching request. When control is carried out with binary signal inputs the respective binary signal input is to be triggered.

10.2.7.3 Remote Control

Remote control of switchgear units may be carried out via the communication interface or with appropriately configured binary signal inputs.

10.2.7.4 Switchgear Unit Cannot Be Controlled

Should a switchgear unit refuse to be controlled, then this may be due to the following reasons:

- General enable for switch commands has not been set.

  (Configuration at MAIN: Inp.asg. ctrl.enabl., *Par/Func/Glob* menu branch)
- Interlocking has operated.

  (Check at MAIN: Interlock equ. viol., *Oper/Cycl/Log* menu branch).

Which interlock(s) is(are) activated may be checked at:

- Bay interlock (BI): MAIN: Bay interlock. act., *Oper/Cycl/Log* menu branch
- Substation interlock (SI): MAIN: Subst. interl. act., *Oper/Cycl/Log* menu branch
- With control set to *"Local"*:

  It is possible to deactivate the interlock through an appropriately configured binary signal input.

  (Configuration at MAIN: Inp.asg.interl.deact, *Par/Func/Glob* menu branch)

> *A substation interlock is only effective when a communication link exists from the communication interface to the substation control level. If the communication link is disrupted then the device switches automatically to bay interlock (BI) without substation interlock (SI). Whether or not a communication error is present can be checked at MAIN: Communication error (Oper/Cycl/Log menu branch).*
>
> *The substation interlock (SI) can be deactivated selectively for any switchgear unit and in any control direction – "Open" or "Close". (Check – e.g. for DEV01 – at DEV01: Open w/o stat.interl or DEV01: Close w/o stat. int. (Par/Func/Cont menu branch).*

10.2.8 Completing Commissioning

Before the P633 is released for operation, the user should make sure that the following steps have been taken:

- All memories have been reset.

  (Reset at MAIN: General reset USER (password-protected) and MT_RC: Reset record. USER, both in *Oper/CtrlTest* menu branch.)
- Blocking of output relays has been cancelled.

  (OUTP: Outp.rel.block USER, *Par/Func/Glob* menu branch, setting *No*.)
- Blocking of the trip command has been cancelled.

  (MAIN: Trip cmd.block. USER, *Par/Func/Glob* menu branch, setting *No*.)
- The device is on-line.

  (MAIN: Device on-line, *Par/Func/Glob* menu branch, setting *Yes (= on)*.)
- The correct control point – *Local* or *Remote* – has been activated.
- The required interlock equations have been activated.

After completion of commissioning, only the green LED indicator signaling “HEALTHY” (H1) should be on.

11 Troubleshooting

This chapter describes problems that might be encountered, their causes, and possible methods for eliminating them. It is intended as a general orientation only, and in cases of doubt it is better to return the P633 to the manufacturer. Please follow the packaging instructions in Section 5.1, (p. 5-4) when returning equipment to the manufacturer.

DANGER

HAZARD OF ELECTRIC SHOCK, EXPLOSION, OR ARC FLASH

- Only qualified personnel, trained, authorized and familiar with the device and all the safety instructions in the general Safety Guide (SFTY/5LM/L11 or later version) and appropriate Chapter 5, Chapter 10, Chapter 11, Chapter 12 and Chapter 13 of this manual, shall work on installation, connection, commissioning, maintenance or servicing of this device.
- Before checking further, disconnect the P633 from the power supply.
- Switch off all the power supplies in connection to the equipment to isolate the device.

Failure to follow these instructions will result in death or serious injury.

The following instructions apply to surface-mounted cases:

WARNING

HAZARD OF EQUIPMENT DAMAGE

- The local control panel (or front element) is connected to processor module P by a plug-in connecting cable. Make sure the connector position is correct. Do not bend the connecting cable!

Failure to follow these instructions can result in equipment damage or unintended equipment operation.

Problem

- Lines of text are not displayed on the local control panel.
  - Check to see whether there is supply voltage at the device connection points.
  - Check to see whether the magnitude of the auxiliary voltage is correct. The P633 is protected against damage resulting from polarity reversal.
- The P633 issues an “Alarm” signal on LED H 3.
  - Identify the specific problem by reading out the monitoring signal memory (see Section 6.13.6.2, (p. 6-33)). The table below lists possible monitoring or warning indication (provided that a configuration setting has been entered at SFMON: Fct. assign. warning), the faulty area, the P633's response, and the mode of the output relay configured for “Warning” and “Blocked/faulty”.

Key

- **–**: No reaction and/or no output relay triggered.
- **Yes**: The corresponding output relay is triggered.
- **Updating**: The output relay configured for 'Warning' starts only if the monitoring signal is still present.

Self-monitoring

Parameter				Address
SFMON: Fct. assign. warning				021 030
SFMON: Mon.sig. retention				021 018

Self-monitoring

Parameter				Address
SFMON: Warning (LED)				036 070
Warning configured for LED H3.				
SFMON: Warning (relay)				036 100
Warning configured for an output relay.				
SFMON: Warm restart exec.				041 202
A warm restart has been carried out.				
SFMON: Cold restart exec.				041 201
A cold restart has been carried out.				
SFMON: Cold restart				093 024
A cold restart has been carried out on account of a checksum error in the memory (NOVRAM). 1st device reaction: Warm restart 2nd device reaction: Device blocking “Warning” output relay: Yes “Blocked/faulty” output relay: Yes				
SFMON: Cold rest./SW update				093 025
A cold restart has been carried out following a software update. 1st device reaction: Warm restart 2nd device reaction: Device blocking “Warning” output relay: Yes “Blocked/faulty” output relay: Yes				
SFMON: Blocking/ HW failure				090 019
Supplementary warning that this device is blocked. “Warning” output relay: Updating “Blocked/faulty” output relay: –				
SFMON: Relay Kxx faulty				041 200
Multiple signal: output relay defective. Device reaction: – 'Warning' output relay: Updating 'Blocked/faulty' output relay: Yes				
SFMON: Hardware clock fail.				093 040
The hardware clock has failed. Device reaction: – “Warning” output relay: Yes “Blocked/faulty” output relay: –				

Parameter				Address
SFMON: Battery failure				090 010
Battery voltage too low. Replace battery. Device reaction: – “Warning” output relay: Updating “Blocked/faulty” output relay: –				
SFMON: Invalid SW d.loaded				096 121
Wrong or invalid software has been downloaded. 1st device reaction: Warm restart 2nd device reaction: Device blocking “Warning” output relay: Yes “Blocked/faulty” output relay: Yes				
SFMON: +15V supply faulty				093 081
The +15 V internal supply voltage has dropped below a minimum value. 1st device reaction: Warm restart 2nd device reaction: Device blocking “Warning” output relay: Yes “Blocked/faulty” output relay: Yes				
SFMON: +24V supply faulty				093 082
The +24 V internal supply voltage has dropped below a minimum value. 1st device reaction: Warm restart 2nd device reaction: Device blocking “Warning” output relay: Yes “Blocked/faulty” output relay: Yes				
SFMON: -15V supply faulty				093 080
The −15 V internal supply voltage has dropped below a minimum value. 1st device reaction: Warm restart 2nd device reaction: Device blocking “Warning” output relay: Yes “Blocked/faulty” output relay: Yes				
SFMON: Wrong module slot 1				096 100
SFMON: Wrong module slot 2				096 101
SFMON: Wrong module slot 3				096 102
SFMON: Wrong module slot 4				096 103
SFMON: Wrong module slot 5				096 104
SFMON: Wrong module slot 6				096 105
SFMON: Wrong module slot 7				096 106
SFMON: Wrong module slot 8				096 107
SFMON: Wrong module slot 9				096 108

Parameter				Address
SFMON: Wrong module slot 10				096 109
SFMON: Wrong module slot 11				096 110
SFMON: Wrong module slot 12				096 111
SFMON: Wrong module slot 13				096 112
SFMON: Wrong module slot 14				096 113
SFMON: Wrong module slot 15				096 114
SFMON: Wrong module slot 16				096 115
SFMON: Wrong module slot 17				096 116
SFMON: Wrong module slot 18				096 117
SFMON: Wrong module slot 19				096 118
SFMON: Wrong module slot 20				096 119
SFMON: Wrong module slot 21				096 120
Module in wrong slot. 1st device reaction: Warm restart 2nd device reaction: Device blocking “Warning” output relay: Yes “Blocked/faulty” output relay: Yes				
SFMON: Wrong module Dig.Bus				096 123
The device has been fitted with a wrong digital bus. Since this is checked using the module variant number this signal can also occur after a firmware upgrade to a version that is not compatible with the hardware. 1st device reaction: Warm restart 2nd device reaction: Device blocking “Warning” output relay: Yes “Blocked/faulty” output relay: Yes				
SFMON: Wrong module HMI				096 124
The device has been fitted with a wrong HMI. Since this is checked using the module variant number this signal can also occur after a firmware upgrade to a version that is not compatible with the hardware. 1st device reaction: Warm restart 2nd device reaction: Device blocking “Warning” output relay: Yes “Blocked/faulty” output relay: Yes				

Parameter				Address
SFMON: Wrong module Comm				096 125
The device has been fitted with a wrong communication module. Since this is checked using the module variant number this signal can also occur after a firmware upgrade to a version that is not compatible with the hardware. 1st device reaction: Warm restart 2nd device reaction: Device blocking “Warning” output relay: Yes “Blocked/faulty” output relay: Yes				
SFMON: Wrong module Ana.Bus				096 126
The device has been fitted with a wrong analog bus. Since this is checked using the module variant number this signal can also occur after a firmware upgrade to a version that is not compatible with the hardware. 1st device reaction: Warm restart 2nd device reaction: Device blocking “Warning” output relay: Yes “Blocked/faulty” output relay: Yes				
SFMON: Defect.module slot 1				097 000
SFMON: Defect.module slot 2				097 001
SFMON: Defect.module slot 3				097 002
SFMON: Defect.module slot 4				097 003
SFMON: Defect.module slot 5				097 004
SFMON: Defect.module slot 6				097 005
SFMON: Defect.module slot 7				097 006
SFMON: Defect.module slot 8				097 007
SFMON: Defect.module slot 9				097 008
SFMON: Defect.module slot10				097 009
SFMON: Defect.module slot11				097 010
SFMON: Defect.module slot12				097 011
SFMON: Defect.module slot13				097 012
SFMON: Defect.module slot14				097 013
SFMON: Defect.module slot15				097 014
SFMON: Defect.module slot16				097 015
SFMON: Defect.module slot17				097 016
SFMON: Defect.module slot18				097 017
SFMON: Defect.module slot19				097 018
SFMON: Defect.module slot20				097 019

Parameter				Address
SFMON: Defect.module slot21				097 020
Defective module in slot x. Device reaction: – “Warning” output relay: Updating “Blocked/faulty” output relay: –				
SFMON: Module A DPR faulty				093 070
Dual-Port-RAM fault on communication module A. This fault is only detected during device startup. Device reaction: – “Warning” output relay: Yes “Blocked/faulty” output relay: –				
SFMON: Module A RAM faulty				093 071
RAM fault on communication module A. Device reaction: – “Warning” output relay: Yes “Blocked/faulty” output relay: –				
SFMON: Module Y DPR faulty				093 110
The checksum feature of analog I/O module Y has detected a fault in the data transmission of the Dual-Port-RAM. Device reaction: – “Warning” output relay: Yes “Blocked/faulty” output relay: –				
SFMON: Module Y RAM faulty				093 111
Fault in the program or data memory of the analog I/O module. Device reaction: – “Warning” output relay: Yes “Blocked/faulty” output relay: –				
SFMON: Error K 901				097 094
SFMON: Error K 902				097 095
SFMON: Error K 903				097 096
SFMON: Error K 904				097 097
SFMON: Error K 905				097 098
SFMON: Error K 906				097 099
SFMON: Error K 907				097 100
SFMON: Error K 908				097 101
SFMON: Error K 1001				097 102
SFMON: Error K 1002				097 103
SFMON: Error K 1003				097 104

Parameter				Address
SFMON: Error K 1004				097 105
SFMON: Error K 1005				097 106
SFMON: Error K 1006				097 107
SFMON: Error K 1007				097 108
SFMON: Error K 1008				097 109
SFMON: Error K 1201				097 118
SFMON: Error K 1202				097 119
SFMON: Error K 1601				097 150
SFMON: Error K 1602				097 151
SFMON: Error K 1603				097 152
SFMON: Error K 1604				097 153
SFMON: Error K 1605				097 154
SFMON: Error K 1606				097 155
SFMON: Error K 1607				097 156
SFMON: Error K 1608				097 157
SFMON: Error K 1801				097 166
SFMON: Error K 1802				097 167
SFMON: Error K 1803				097 168
SFMON: Error K 1804				097 169
SFMON: Error K 1805				097 170
SFMON: Error K 1806				097 171
SFMON: Error K 2001				097 182
SFMON: Error K 2002				097 183
SFMON: Error K 2003				097 184
SFMON: Error K 2004				097 185
SFMON: Error K 2005				097 186
SFMON: Error K 2006				097 187
SFMON: Error K 2007				097 188
SFMON: Error K 2008				097 189
Output relay K xxx defective. Device reaction: – “Warning” output relay: Updating “Blocked/faulty” output relay: Yes				

Parameter				Address
SFMON: Undef. operat. code				093 010
Undefined operation code. 1st device reaction: Warm restart 2nd device reaction: Device blocking “Warning” output relay: Yes “Blocked/faulty” output relay: Yes				
SFMON: Abnormal termination				093 030
The application has been terminated in an unexpected way. If this error occurs during a (re-)start of the device then this message is displayed and the device is blocked. 1st device reaction: Warm restart 2nd device reaction: Device blocking “Warning” output relay: Yes “Blocked/faulty” output relay: Yes				
SFMON: Bad arg. system call				093 031
Invalid parameter when calling a function of the operating system. If this error occurs during a (re-)start of the device then this message is displayed and the device is blocked. 1st device reaction: Warm restart 2nd device reaction: Device blocking “Warning” output relay: Yes “Blocked/faulty” output relay: Yes				
SFMON: Mutex deadlock				093 032
Software threads are locked from each other by mutex. If this error occurs during a (re-)start of the device then this message is displayed and the device is blocked. 1st device reaction: Warm restart 2nd device reaction: Device blocking “Warning” output relay: Yes “Blocked/faulty” output relay: Yes				
SFMON: Invalid memory ref.				093 033
Attempt to access an invalid memory segment. If this error occurs during a (re-)start of the device then this message is displayed and the device is blocked. 1st device reaction: Warm restart 2nd device reaction: Device blocking “Warning” output relay: Yes “Blocked/faulty” output relay: Yes				

Parameter				Address
SFMON: Unexpected exception				093 034
Miscellaneous error message from the processor or operating system. If this error occurs during a (re-)start of the device then this message is displayed and the device is blocked. 1st device reaction: Warm restart 2nd device reaction: Device blocking “Warning” output relay: Yes “Blocked/faulty” output relay: Yes				
SFMON: Invalid arithm. op.				093 011
Invalid arithmetic operation. 1st device reaction: Warm restart 2nd device reaction: Device blocking “Warning” output relay: Yes “Blocked/faulty” output relay: Yes				
SFMON: Undefined interrupt				093 012
Undefined interrupt. 1st device reaction: Warm restart 2nd device reaction: Device blocking “Warning” output relay: Yes “Blocked/faulty” output relay: Yes				
SFMON: Exception oper.syst.				093 013
Interrupt of the operating system. 1st device reaction: Warm restart 2nd device reaction: Device blocking “Warning” output relay: Yes “Blocked/faulty” output relay: Yes				
SFMON: Protection failure				090 021
Watchdog is monitoring the periodic start of protection routines. It has detected an error. 1st device reaction: Warm restart 2nd device reaction: Device blocking “Warning” output relay: Yes “Blocked/faulty” output relay: Yes				
SFMON: Checksum error param				090 003
A checksum error involving the parameters in the memory (NOVRAM) has been detected. 1st device reaction: Warm restart 2nd device reaction: Device blocking “Warning” output relay: Yes “Blocked/faulty” output relay: Yes				

Parameter				Address
SFMON: Clock sync. error				093 041
In 10 consecutive clock synchronization telegrams, the difference between the time of day given in the telegram and that of the hardware clock is greater than 10 ms. Device reaction: – “Warning” output relay: Yes “Blocked/faulty” output relay: –				
SFMON: Interm.volt.fail.RAM				093 026
Faulty test pattern in the RAM. This can occur, for example, if the processor module or the power supply module is removed from the bus module (digital). This fault is only detected during device startup. After the fault is detected, the software initializes the RAM. This means that all records are deleted. 1st device reaction: Warm restart 2nd device reaction: Device blocking “Warning” output relay: Yes “Blocked/faulty” output relay: Yes				
SFMON: Overflow MT_RC				090 012
Last entry in the monitoring signal memory in the event of overflow. Device reaction: – “Warning” output relay: Yes “Blocked/faulty” output relay: –				
SFMON: Semaph. MT_RC block.				093 015
Software overloaded. Device reaction: – “Warning” output relay: Yes “Blocked/faulty” output relay: –				
SFMON: Inval. SW vers.comm.				093 075
Incorrect or invalid communication software has been downloaded. Device reaction: – “Warning” output relay: Yes “Blocked/faulty” output relay: –				
SFMON: Inval. Config. IEC				093 079
Invalid parameters in the IEC configuration. Device reaction: – “Warning” output relay: Yes “Blocked/faulty” output relay: –				

Parameter				Address
SFMON: Invalid SW vers. Y				093 113
Incorrect or invalid software for analog I/O module Y has been downloaded. Device reaction: – “Warning” output relay: Yes “Blocked/faulty” output relay: –				
SFMON: Time-out module Y				093 112
Watchdog is monitoring the periodic status signal of the analog I/O module Y. It has detected an error. Device reaction: – “Warning” output relay: Yes “Blocked/faulty” output relay: –				
SFMON: M.c.b. trip V				098 000
The line-side voltage transformer m.c.b. has tripped. Device reaction: Blocking of the short-circuit direction determination. “Warning” output relay: Yes “Blocked/faulty” output relay: –				
SFMON: Insul. Alarm 1				098 091
SFMON: Insul. Alarm 2				098 092
SFMON: Insul. Alarm 3				098 093
SFMON: Buchholz Alarm 1				098 094
SFMON: Buchholz Alarm 2				098 095
SFMON: Buchholz Alarm 3				098 096
The transformer monitoring has received/detected a Buchholz/insulation fault. “Warning” output relay: Yes “Blocked/faulty” output relay: –				
SFMON: DC Faulty 1				098 097
SFMON: DC Faulty 2				098 098
SFMON: DC Faulty 3				098 099
The transformer monitoring has received/detected a DC fault. “Warning” output relay: Yes “Blocked/faulty” output relay: –				
SFMON: Meas. circ. I faulty				091 018
The measuring-circuit monitoring function has detected a fault in the current-measuring circuits. (See functions MCMON and CTS, measuringcircuit monitoring multiple signal.) Device reaction: – “Warning” output relay: Yes “Blocked/faulty” output relay: –				
SFMON: Meas. c. I faulty, a				091 026

Parameter				Address
SFMON: Meas. c. I faulty, b				091 027
SFMON: Meas. c. I faulty, c				091 028
SFMON: Meas. c. I faulty, d				091 029
The measuring-circuit monitoring function, associated with the respective end, has detected a fault in the current-measuring circuits. (See functions MCMON and CTS, monitoring of measuring circuits.) Device reaction: – “Warning” output relay: Yes “Blocked/faulty” output relay: –				
SFMON: Invalid charact. V/f				091 011
An invalid characteristic has been set for the overfluxing protection. Device reaction: Protection is blocked. “Warning” output relay: Updating “Blocked/faulty” output relay: –				
SFMON: Invalid SW vers DHMI				093 145
Incorrect or invalid software was loaded to operate the detachable display (DHMI). Device reaction: – “Warning” output relay: Yes “Blocked/faulty” output relay: –				
SFMON: Invalid config.TPDx				093 160
An invalid assignment of switchgear units has been made for **TPD1: TPD1 Disconnector** and **TPD1: TPD1 ground. switch**. Device reaction: Blocking of the Three Position Drive. “Warning” output relay: Updating “Blocked/faulty” output relay: –				
SFMON: Invalid scaling BCD				093 124
An invalid characteristic has been set for the BCD output channel of analog I/O module Y. Device reaction: Depends on type of fault detected. “Warning” output relay: Updating “Blocked/faulty” output relay: –				
SFMON: Invalid scaling A-1				093 114
SFMON: Invalid scaling A-2				093 115
An invalid characteristic has been set for one of the analog output channels of analog I/O module Y. Device reaction: Depends on type of fault detected. “Warning” output relay: Updating “Blocked/faulty” output relay: –				

Parameter				Address
SFMON: Invalid scaling IDC				093 116
An invalid characteristic has been set for the analog input channel of analog I/O module Y. Device reaction: Depends on type of fault detected. “Warning” output relay: Updating “Blocked/faulty” output relay: –				
SFMON: PT100 open circuit				098 024
The P633 has detected an open circuit in the connection of the resistance thermometer “PT100” to the analog I/O module Y. Device reaction: Depends on type of fault detected. “Warning” output relay: Updating “Blocked/faulty” output relay: –				
SFMON: Overload 20 mA input				098 025
The 20 mA input of analog I/O module Y is overloaded. Device reaction: Depends on type of fault detected. “Warning” output relay: Updating “Blocked/faulty” output relay: –				
SFMON: Open circ. 20mA inp.				098 026
The P633 has detected an open circuit in the connection of the 20 mA input. Device reaction: Depends on type of fault detected. “Warning” output relay: Updating “Blocked/faulty” output relay: –				
SFMON: Setting error f<>				098 028
The over-/underfrequency protection function has been set for “overfrequency” monitoring (based on the settings for operate value and nominal frequency). This setting is not valid in the *f w. Delta f/Delta t* operating mode. Device reaction: Blocking of the over-/under frequency protection function “Warning” output relay: Updating “Blocked/faulty” output relay: –				
SFMON: Iref, a inval. range				091 007
SFMON: Iref, b inval. range				091 008
SFMON: Iref, c inval. range				091 009
The reference current determined by the P633 for differential protection is not within the permissible range. Device reaction: Protection is blocked. “Warning” output relay: Updating “Blocked/faulty” output relay: –				
SFMON: Matching fail. end a				091 000
SFMON: Matching fail. end b				091 001

Parameter				Address
SFMON: Matching fail. end c				091 002
The calculated amplitude matching factor of the differential protection function is above the permissible range. Device reaction: Protection is blocked. “Warning” output relay: Updating “Blocked/faulty” output relay: –				
SFMON: Ratio mtch.fact.inv.				091 004
The ratio of the amplitude matching factors for differential protection is not within the permissible range. Device reaction: Protection is blocked. “Warning” output relay: Updating “Blocked/faulty” output relay: –				
SFMON: 2nd match.fact. inv.				091 006
The second highest amplitude matching factor for differential protection is smaller than permitted. Device reaction: Protection is blocked. “Warning” output relay: Updating “Blocked/faulty” output relay: –				
SFMON: Inv.range Iref REF_1				091 105
SFMON: Inv.range Iref REF_2				091 115
SFMON: Inv.range Iref REF_3				091 125
The reference current determined by the P633 for ground differential protection is not within the permissible range. Device reaction: Protection is blocked. “Warning” output relay: Updating “Blocked/faulty” output relay: –				
SFMON: Match.f. kam,N REF_1				091 101
SFMON: Match.f. kam,Y REF_1				091 102
SFMON: Match.f. kam,N REF_2				091 111
SFMON: Match.f. kam,Y REF_2				091 112
SFMON: Match.f. kam,N REF_3				091 121
The calculated amplitude matching factor of the ground differential protection function is above the permissible range. Device reaction: Protection is blocked. “Warning” output relay: Updating “Blocked/faulty” output relay: –				
SFMON: Rat.mtch.f.inv.REF_1				091 103
SFMON: Rat.mtch.f.inv.REF_2				091 113

Parameter				Address
SFMON: Rat.mtch.f.inv.REF_3				091 123
The ratio of the amplitude matching factors of the differential protection function is not within the permissible range. Device reaction: Protection is blocked. “Warning” output relay: Updating “Blocked/faulty” output relay: –				
SFMON: Min.mtch.f.inv.REF_1				091 104
SFMON: Min.mtch.f.inv.REF_2				091 114
SFMON: Min.mtch.f.inv.REF_3				091 124
The lowest amplitude matching factor of the differential protection function is lower than permitted. Device reaction: Protection is blocked. “Warning” output relay: Updating “Blocked/faulty” output relay: –				
SFMON: CTA error THRM1				098 036
SFMON: CTA error THRM2				098 037
Faulty coolant temperature acquisition. “Warning” output relay: Yes “Blocked/faulty” output relay: –				
SFMON: Setting error THRM1				098 038
SFMON: Setting error THRM2				098 039
The maximum permissible object temperature and the maximum permissible coolant temperature have been set to the same value. This setting is not valid. “Warning” output relay: Yes “Blocked/faulty” output relay: –				
SFMON: Inv.inp.f.clock sync				093 120
The function was configured to a binary signal input on the analog I/O module Y. Such a configuration is not permitted for this function. Device reaction: – “Warning” output relay: Updating “Blocked/faulty” output relay: –				
SFMON: Output 30				098 053
SFMON: Output 30 (t)				098 054
SFMON: Output 31				098 055
SFMON: Output 31 (t)				098 056
SFMON: Output 32				098 057

Parameter				Address
SFMON: Output 32 (t)				098 058
These LOGIC outputs can be included in the list of warning signals by selection at **SFMON: Fct. assign. warning**. The warning signals are also recorded in the monitoring signal memory. “Warning” output relay: Yes “Blocked/faulty” output relay: –				
SFMON: CB1 pos.sig. implaus **SFMON: CB2 pos.sig. implaus** **SFMON: CB3 pos.sig. implaus**				098 124 098 125 098 126
The plausibility logic was triggered during the acquisition of the circuit breaker's (CB) status signals. “Warning” output relay: Yes “Blocked/faulty” output relay: –				
SFMON: CB1 faulty EXT **SFMON: CB2 faulty EXT** **SFMON: CB3 faulty EXT**				098 072 098 129 098 130
The external input **CBF_1: CB faulty EXT** has become active. Device reaction: – “Warning” output relay: Yes “Blocked/faulty” output relay: –				
SFMON: Unsuff. No. of ends				091 010
More ends have been simultaneously disconnected from the measurement than is permitted. (Only one end can be disconnected with the P633.) Device reaction: The P633 is blocked. “Warning” output relay: Updating “Blocked/faulty” output relay: –				
SFMON: Disc. end x invalid				091 012
During the P633’s initialization, the stored state is compared with the current state of the input functions. This check has resulted in a discrepancy. Device reaction: The P633 remains blocked until the discrepancy has ended. “Warning” output relay: Updating “Blocked/faulty” output relay: –				

12 Maintenance

DANGER

HAZARD OF ELECTRIC SHOCK, EXPLOSION, OR ARC FLASH

- Only qualified personnel, trained, authorized and familiar with the device and all the safety instructions in the general Safety Guide (SFTY/5LM/L11 or later version) and appropriate Chapter5, Chapter 10, Chapter 11, Chapter 12 and Chapter 13 of this manual, shall work on installation, connection, commissioning, maintenance or servicing of this device.

Failure to follow these instructions will result in death or serious injury.

The P633 is a low-maintenance device. The components used in the units are selected to meet exacting requirements. Recalibration is not necessary.

12.1 Maintenance Procedures in the Power Supply Area

Replacement of the power supply module must be carried out by trained personnel, and the power supply voltage must be turned off while the work is being performed.

DANGER

HAZARD OF ELECTRIC SHOCK, EXPLOSION, OR ARC FLASH

- Always disconnect the device from the auxiliary power supply, before removing any hardware module.
- Switch off all the power supplies in connection to the equipment to isolate the device, before removing any hardware module.

Failure to follow these instructions will result in death or serious injury.

DANGER

HAZARD OF ELECTRIC SHOCK, EXPLOSION, OR ARC FLASH

- The power supply must be turned off for at least 5 s before power supply module V is removed. Otherwise there is the danger of an electric shock.

Failure to follow these instructions will result in death or serious injury.

The following instructions apply to surface-mounted cases:

WARNING

HAZARD OF EQUIPMENT DAMAGE

- The local control panel (or front element) is connected to processor module P by a plug-in connecting cable. Make sure the connector position is correct. Do not bend the connecting cable!

Failure to follow these instructions can result in equipment damage or unintended equipment operation.

In general, the electronic components used for the device family *Easergy MiCOM 30* are designed for a long service life.

For the power supply, however, dimensioning requirements dictate the use of electrolytic capacitors that are subject to increased wear and tear. The useful life of these capacitors depends on their temperature and thus on the components fitted in the device, the load conditions, device location and environmental conditions.

The internal voltage levels are cyclically checked by the P30 self-monitoring functions. In case the voltage levels deviate from their specified values a warning message will be issued or, for persistent problems, the device will be set to a safe condition (blocking). Hence, there is no imperative need to replace the power supply module after a pre-defined period of time. However, should you

need to guarantee a high availability of the device then we recommend preventive replacement of the power supply module after a period of 8 to 10 years.

Moreover, the power supply module of the P633 is equipped with a lithium battery for non-volatile storage of fault data and for keeping the internal clock running in the event of failure of the auxiliary power supply. The useful life of the lithium battery depends on the auxiliary power supply of the device.

- If the P633 is continuously connected to the auxiliary power supply, then there is no discharging of the battery, and the battery will thus not be depleted during its service life.
- Should the P633 be disconnected from the auxiliary power supply for several years, then the battery capacity would decrease.

During normal operation, the battery voltage is monitored. If the voltage falls below a pre-defined threshold, a warning message will be issued and the battery has to be replaced.

After the maintenance procedures described above have been completed, new commissioning tests as described in Section 10.2, (p. 10-5) must be carried out.

12.2 Routine Functional Testing

The P633 is used as a safety device and must therefore be routinely injection tested for proper operation. The first functional tests should be carried out approximately 6 to 12 months after commissioning. Functional tests should be performed at intervals of 2 to 3 years – 4 years at the maximum.

The P633 incorporates in its system a very extensive self-monitoring function for hardware and software. The internal structure guarantees, for example, that communication within the processor system will be checked on a continuing basis.

Nonetheless, there are a number of subfunctions that cannot be checked by the self-monitoring feature without injection testing from the device terminals. The respective device-specific properties and settings must be observed in such cases.

In particular, none of the control and signaling circuits that are run to the device from the outside are checked by the self-monitoring function.

12.3 Analog Input Circuits

The analog inputs are fed through an analog preprocessing feature (anti-aliasing filtering) to a common analog-to-digital converter. In conjunction with the self-monitoring function, the CT/VT supervision function that is available for the device’s general functions can detect deviations in many cases. However, it is still necessary to test from the device terminals in order to make sure that the analog measuring circuits are functioning correctly.

The best way to carry out a static test of the analog input circuits is to check the primary measured operating data using the operating data measurement function or to use a suitable testing instrument. A “small” measured value (such as the nominal current in the current path) and a “large” measured value (such as the nominal voltage in the voltage path) should be used to check the measuring range of the A/D converter. This makes it possible to check the entire dynamic range.

The accuracy of operating data measurement is <1%. An important factor in evaluating device performance is long-term performance based on comparison with previous measurements.

In addition, a dynamic test can be used to check transmission performance and the phase relation of the current transformers and the anti-aliasing filter. This can best be done by measuring the trigger point of the first zone when there is a two-phase ungrounded fault. For this test, the value of the short-circuit current should be such that a loop voltage of approximately 2 V is obtained at the device's terminals with the set impedance. Furthermore, a suitable testing instrument that correctly replicates the two-phase ungrounded fault should be used for this purpose.

Additional analog testing of such factors as the impedance characteristic or the starting characteristic is not necessary, in our opinion, since information processing is completely digital and is based on the measured analog current and voltage values. Proper operation was checked in conjunction with type testing.

12.4 Binary Opto Inputs

The binary inputs are not checked by the self-monitoring function. However, a testing function is integrated into the software so that the trigger state of each input can be read out (*Oper/Cycl/Phys* menu branch). This check should be performed for each input being used and can be done, if necessary, without disconnecting any device wiring.

12.5 Binary Outputs

With respect to binary outputs, the integrated self-monitoring function includes even two-phase triggering of the relay coils of all the relays. There is no monitoring function for the external contact circuit. In this case, the all-or-nothing relays must be triggered by way of device functions or integrated test functions. For these testing purposes, triggering of the output circuits is integrated into the software through a special control function (*Oper/CtrlTest* menu branch).

DANGER

HAZARD OF ELECTRIC SHOCK, EXPLOSION, OR ARC FLASH

- Before starting the test, open any triggering circuits for external devices so that no inadvertent switching operations will take place.

Failure to follow these instructions will result in death or serious injury.

12.6 Communication Interfaces

The integrated self-monitoring function for the PC or communication interface also includes the communication module. The complete communication system, including connecting link and fiber-optic module (if applicable), is always totally monitored as long as a link is established through the control program or the communication protocol.

13 Storage

Devices must be stored in a dry and clean environment. A temperature range of -25°C to +70°C (-13°F to +158°F) must be maintained during storage (see chapter entitled “Technical Data”). The relative humidity must be controlled so that neither condensation nor ice formation will result.

If the units are stored without being connected to auxiliary voltage, then the electrolytic capacitors in the power supply area need to be recharged every 4 years. Recharge the capacitors by connecting auxiliary voltage to the P633 for approximately 10 minutes.

If the units are stored during a longer time, the battery of the power supply module is used for the continuous buffering of the event data in the working memory of the processor module. Therefore the battery is permanently required and discharges over time. In order to avoid this continuous discharge, it is recommended to remove the power supply module from the mounting rack during long storage periods. The contents of the event memory should be previously read out and stored separately!

⚠ WARNING

HAZARD OF EQUIPMENT DAMAGE OR LIFETIME REDUCTION

- Do not sustain exposure to high humidity during storage, the value shall not exceed 75% relative humidity.
- Once the device has been unpacked, it is recommended to energize it within the three following months.
- The device has to be energized at least once in 4 years, if it is not in permanent operation.
- Where electrical equipment is being installed, sufficient time should be allowed for acclimatization to the ambient temperature of the environment before energization.

Failure to follow these instructions can result in equipment damage, unintended equipment operation or reduction of equipment lifetime.

14 Accessories and Spare Parts

The P633 is supplied with standard labeling for the LED indicators. LED indicators that are not already configured and labeled can be labeled using the label strips supplied. Affix the label strips to the front of the unit at the appropriate location.

The label strips can be filled in using a “Stabilo” brand pen containing water-resistant ink (Type OH Pen 196 PS).

Description	Order No.
Cable bushings	88512-4-0337414-301
Resistor 200 Ω	255.002.696
84 TE frame	88512-4-9650723-301
Operating program for Windows	On request (Easergy Studio) or can be downloaded from SE website

15 Order Information

Basic Configuration Variants

Order information MiCOM P633																		
18 character cortec		**1 2 3 4**	**5**	**6**	**7**		**8**	**9**	**10**	**11**	**12, 13**				**14**	**15**	**16**	**17**	**18**
Three Winding Transformer Differential Protection	**P 6 3 3 -**	**P 6 3 3 -**			**9**	**9**	**1**				**-312**	**-4xx**	**-661**	**-7xx**	**-**	**-46x**	**-9x x**	**-**	**-8xx**
Basic device:																			
Basic device 40TE, pin-terminal connection,			3					0		0		-419							
Basic device 84TE, pin-terminal connection,			7									-420							
Basic device 84TE, ring-terminal connection, basic complement with 4 binary inputs, 8 output relays and 6 function keys			8									-421							
Mounting option and display:																			
Surface-mounted, local control panel with text display				3															
Flush-mounted, local control panel with text display				4															
Surface-mounted, with detachable HMI				7															
Flush-mounted,with detachable HMI				9															
Processor extension and Current transformer:																			
Inom = 1 A / 5 A (T11...T14 / T21...24) [2]					9														
Inom = 1 A/ 5 A (T31...T34) [2]						9													
Voltage transformer:																			
Vnom = 50 ... 130 V (1-pole)							1												
Additional binary I/O options:																			
Without								0											
With 1 binary module (add. 6 binary inputs and 8 output relays) [5]								1											
With 2 binary modules (add. 12 binary inputs and 16 output relays) [5]								2											
With 1 binary module (add. 6 binary inputs and 6 output relays (2-pole)) for the control of up to 3 switchgear units								5											
With 1 binary module (add. 6 binary inputs and 6 output relays (2-pole)) [5] for the control of up to 3 switchgear units and 1 binary module (add. 6 binary inputs and 8 output relays)								8											
Power supply and additional binary I/O options:																			
VA , nom = 24 … 60 VDC									E										
VA,nom = 60 ... 250 VDC / 100 ... 230 VAC									F										
VA,nom = 24 ... 60 VDC and 6 output relays									G										
VA,nom = 60 ... 250 VDC / 100 ... 230 VAC and 6 output relays									H										
VA , nom = 24 … 60 VDC and 6 binary inputs and 3 output relays									J										
VA,nom = 60 ... 250 VDC / 100 ... 230 VAC and 6 binary inputs and 3 output relays									K										
VA , nom = 24 … 60 VDC and 4 high break contacts									L										
VA,nom = 60 ... 250 VDC / 100 ... 230 VAC and 4 high break contacts									M										

Further Options

Order information MiCOM P633																		
18 character cortec		**1 2 3 4**	**5**	**6**	**7**		**8**	**9**	**10**	**11**	**12, 13**				**14**	**15**	**16**	**17**	**18**
Three Winding Transformer Differential Protection	**P 6 3 3 -**	**P 6 3 3 -**			**9**	**9**	**1**				**-312**	**-4xx**	**-661**	**-7xx**	**-**	**-46x**	**-9x x**	**-**	**-8xx**
Further add. options:																			
Without										0									
With analog module [5]										2									
With binary module (add. 24 binary inputs) [5]										4									
With analog module and binary module (add. 24 binary inputs) [5]										6									
Switching threshold on binary inputs:																			
Standard variant with switching threshold at 65% of 24 VDC (VA,min)			Without order extension No.																
Special variant with switching threshold at 65% of 127 VDC (VA,nom) [8]																-461			
Special variant with switching threshold at 65% of 250 VDC (VA,nom) [8]																-462			
Special variant with switching threshold at 65% of 110 VDC (VA,nom) [8]																-463			
Special variant with switching threshold at 65% of 220 VDC (VA,nom) [8]																-464			

Communication Options

Order information MiCOM P633																		
18 character cortec		**1 2 3 4**	**5**	**6**	**7**	**8**	**9**	**10**	**11**	**12, 13**				**14**	**15**	**16**	**17**	**18**
Three Winding Transformer Differential Protection	**P 6 3 3 -**	**P 6 3 3 -**			**9**	**9**	**1**			**-312**	**-4xx**	**-661**	**-7xx**	**-**	**-46x**	**-9x x**	**-**	**-8xx**
With communication / information interface:																		
Without			Without order extension No.															
Protocol can be switched between: [18]																-92		
IEC 60870-5-101/-103, Modbus, DNP3, Courier																		
and IRIG-B input for clock synchronization																		
and 2nd interface (RS485, IEC 60870-5-103)																		
For connection to wire, RS485, isolated																1		
For connection to plastic fiber, FSMA connector																2		
For connection to glass fiber, ST connector																4		
Ethernet Board 2, 100 Mbit/s, Protocol IEC 61850 Ed. 1/ Ed. 2/ IEC 60870-5-104 (switchable) [26]																		
without Cyber Security compatibility																**-97**		
with advanced Cyber Security compatibility [27]																**-99**		
Single connection, wire RJ45																1		
and IRIG-B input for clock synchronization																		
Single connection, glass fiber LC																2		
and IRIG-B input for clock synchronization																		
and 2nd 100 Mbit/s Ethernet service interface, wire RJ45																		
Redundant connection, wire RJ45, RSTP/ HSR/ PRP (switchable)																3		
and IRIG-B input for clock synchronization																		
and 2nd 100 Mbit/s Ethernet service interface, wire RJ45																		
Redundant connection, glass fiber LC, RSTP/ HSR/ PRP (switchable)																4		
and IRIG-B input for clock synchronization																		
and 2nd 100 Mbit/s Ethernet service interface, wire RJ45																		
Language:																		
English (German) [4]			Without order extension No.															
Px40 English (German) [4]			Not yet available - on request															-800
German (English) [4]																		-801
French (English) [4]			Not yet available - on request															-802
Spanish (English) [4]			Not yet available - on request															-803
Polish (English) [4]			Not yet available - on request															-804
Russian (English) [4] [7]			Not yet available - on request															-805

Key

2) Switching via parameter, default setting is underlined!

4) Second included language in brackets.

5) Only for 84 TE case.

7) Hardware option, supports Cyrillic letters instead of special West European characters.

8) Standard variant recommended if higher pickup threshold not explicitly required by the application.

18) Communication option required for control function.

26) Option IEC 60870-5-104 only for German market and on request.

27) According to BDEW / NERC / IEEE 1686.

Information about Ordering Options

Language version

In order to display the Russian data model, the corresponding order extension number (-805) must be added upon ordering so that the hardware option supporting Cyrillic characters is integrated. With this ordering option, reference menu texts (English) will be available for display. However, other Western European languages containing extra characters will not be fully supported. Consequently, selecting the “Russian / English” ordering option means that it will not be possible to download Western European data models into the device.

Binary Inputs' Switching Threshold

The standard version of binary signal inputs (opto-couplers) is recommended in most applications, as these inputs operate with any voltage from 18 V. Special versions with higher pick-up/drop-off thresholds (see also “Technical Data”,

Chapter 2, (p. 2-1)) are provided for applications where a higher switching threshold is expressly required.

Customer Care Centre

http://www.schneider-electric.com/ccc

Schneider Electric

35 rue Joseph Monier
92506 Rueil-Malmaison
FRANCE

Phone: +33 (0) 1 41 29 70 00
Fax: +33 (0) 1 41 29 71 00

www.schneider-electric.com

Publication: P633/EN M/R-b5-A Volume 1

Publishing: Schneider Electric
09/2018

© 2018 Schneider Electric. All rights reserved.